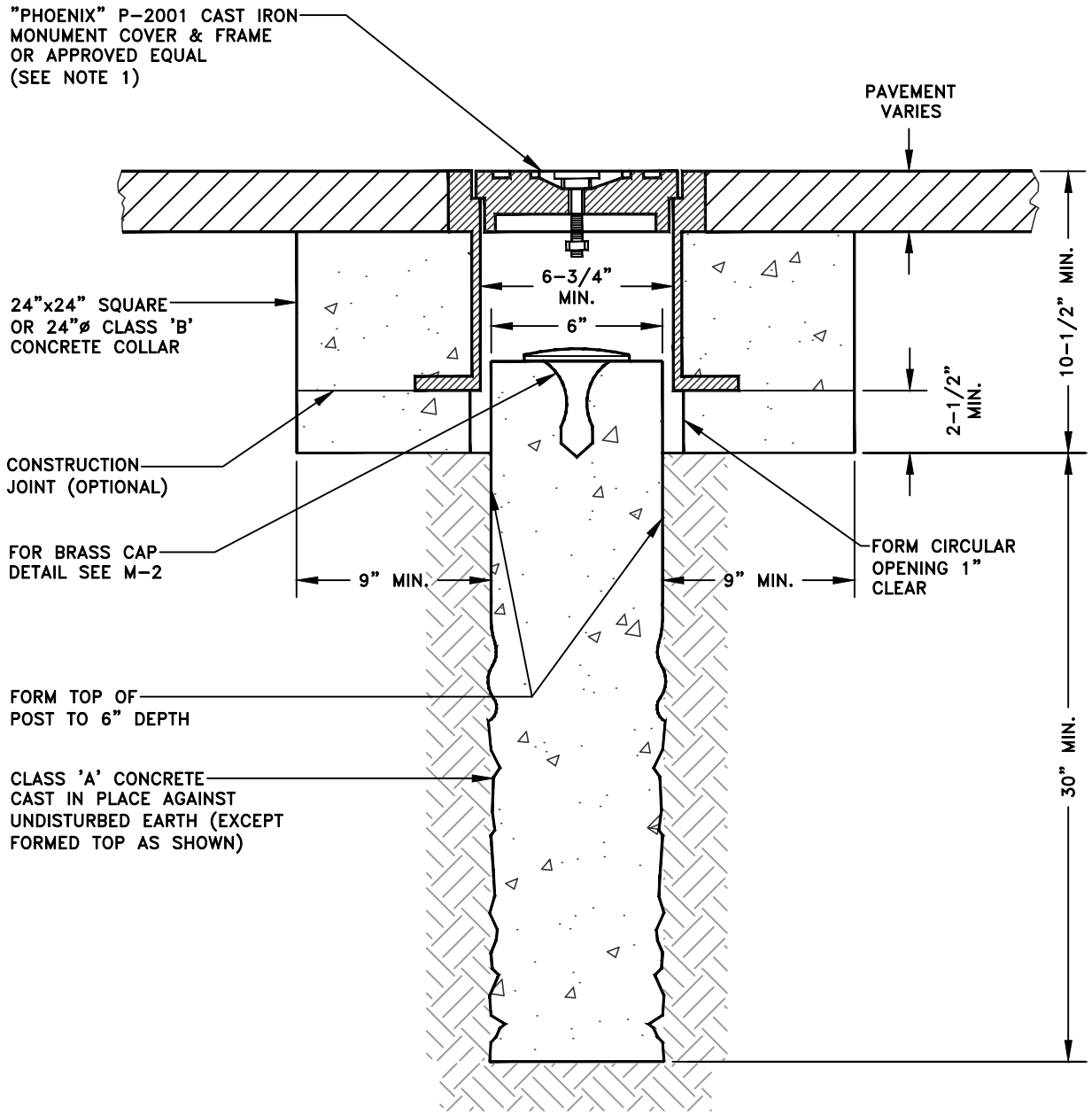

NOTES:

1. MONUMENT COVERS & FRAMES SHALL BE TOUGH GREY IRON CASTINGS CONFORMING TO ASTM A-48, CLASS 30 B. EACH COVER SHALL BE GROUND OR OTHERWISE FINISHED SO THAT IT WILL FIT ITS FRAME WITHOUT ROCKING.

2. "MONUMENT" SHALL BE INSCRIBED ON COVER.

	CITY OF DALY CITY, CALIFORNIA DEPARTMENT OF PUBLIC WORKS	STANDARD DETAIL
	SURVEY MONUMENT INSTALLATION WITH FRAME REVIEWED BY: Richard Chu Jr. CITY ENGINEER ADOPTED ON: DEC 10, 2018 CITY COUNCIL	M-1 DATE: NOV 2018