CITY OF DALY CITY

GENERAL CONDITIONS STANDARD SPECIFICATIONS AND DRAWINGS

This document was initially approved and adopted by the City Council of the City of Daly City on February 26, 1990, and the current edition was adopted on February 9, 2004.

Public Work Department
City of Daly City
333 – 90th Street
Daly City, CA 94015
(650) 991-8064

Cost per printed copy is $55.00 if obtained at City Hall; and $60.00 if requested by mail. Electronic File in CD-ROM is $20.00 if obtained at City Hall and $25.00 if requested by mail.

02/09/04

CITY OF DALY CITY

GENERAL CONDITIONS, STANDARD SPECIFICATIONS AND DRAWINGS

TABLE OF CONTENTS

PART I – INTRODUCTION

PART II – GENERAL CONDITIONS

1. Contract and Contract Documents 1
2. Definitions 1
3. Conflicting Conditions 4
4. Pre-construction Conference 4
5. Plans and Specifications 4
6. Submittal Schedule 4
7. Additional Instructions and Detail Drawings 4
8. Record Drawings ("As-Builts") and Preconstruction Video 5
9. Grade Certificates 5
10. Shop or Setting Drawings 6

11. Compliance With Laws and Regulations 6
12. Employment Of Illegal Aliens 6
13. Contractor's Obligations – Cooperation with Others 7
14. Employees Of Contractors 7
15. Apprentices and Trainees 7
16. Superintendence By Contractor 8
17. Subcontracting 8
18. Subcontract Documents 9
19. Separate Contracts 9
20. Assignments 9

21. Notice and Service Thereof 9
22. Surveys 9
23. Permits, Licenses and Regulations 10
24. Reports, Records and Data 10
25. Payrolls and Basic Records 10
26. Underground Service Alert (USA) Markings 10
27. Errors and Discrepancies Noted by Contractor 10
28. Construction Project Signs 11
29. Potholing Existing Utilities/High Risk Facilities – Differing Site Conditions 11
30. Removal/Relocation of Public Service or Other Equipment or Structures 14

31. Shutdown/Tie-Ins of Existing Utilities 14
32. Construction Schedule, Progress Meetings, Commencement of Work, and Periodic Estimates 14
33. Time for Completions and Liquidated Damages 15
34. Contractor Storage Area 16
35. Contractor's Parking 17
36. Construction Work Hours Regulations 17
37. Contractor Use of Premises 17
38. Overtime Requirements 17
39. Safety and Health Regulations for Construction 18
40. Hazardous Materials and Worker Safety 18

41. Materials, Services and Facilities 19
42. Contractor's Title to Material 19
43. Inspection and Testing of Materials 19
44. "Or Equal" Clause 19
45. Patents, Licenses and Royalty Fees 20
46. Weather Conditions 20
47. Protection of Work and Property - Emergency 21
48. Use of Premises, Preservation of Property and Damages 22
49. Continuous Use of Existing Building 23
50. Maintaining Public and Traffic Safety 23

51. Hauling 23
52. Maintaining Access 23
53. "No Parking" in Construction Zones 24
54. Cleanup and Removal of Debris 24
55. Hold Harmless 25
56. Contractor's and Subcontractor's Insurance 25
57. Faithful Performance and Payment (Labor and Material) Bonds 30
58. Consent of Sureties 30
59. Engineer Authority 30
60. Prohibited Interests 31

61. Inspection 31
62. Land and Rights-of-Way 32
63. Temporary Work Easements 32
64. Work Done By Others 32
65. Beneficial Use 33
66. Payment to Contractor 33
67. Payment for Mobilization 35
68. Withholding Payments 35
69. Final Payment – Effect Thereof 36
70. Satisfaction of Liens 36

71. Payments By Contractor 37
72. Retention of Legal Rights 37
73. Quantities of Estimate 37
74. Changes In Work 37
75. Correction of Work 38
76. Claims for Extra Costs 39
77. Claims and Protests 40
78. Suspension of Work 40
79. Unanticipated Concealed Conditions 40
80. Final Review/Acceptance of Project Work 41

81. Mutual Responsibility of Contractors 41
82. Guaranty 42
83. Equal Employment Opportunity 42
84. Area Affirmative Action Plan 43
85. Prevailing Wage 44
86. Clean Air Act and Federal Water Pollution Control Act 44
87. Stormwater Pollution Prevention Requirements 45
88. Sound Control Requirements 46

89. Dust Alleviation and Control 46
90. National Historic Preservation Act of 1966 46
91. Required Provisions Deemed Inserted 46
92. Right of the City to Terminate Contract 46
93. Failure to Complete Work 47
94. Ownership of Work Product 47
95. Noncollusion Affidavit to be Executed by Bidder and Submitted With Bid 47
96. Certification for Contracts, Grants, Loans, and Cooperative Agreements 48
97. Five Year Moratorium On New Asphalt Pavements 48

PART III – TECHNICAL SPECIFICATIONS

Division 1

01310 Construction Schedule A
01311 Construction Schedule B
01340 Submittals
01410 Testing Laboratory Services
01600 Material
01720 Project Record Documents
01730 Operating and Maintenance Data

Division 2

02100 Clearing, Grubbing and Site Preparation
02200 Engineered Fill
02210 Site Grading
02220 Roadway Subgrade Preparation
02221 Trench Excavation and Backfill
02270 Erosion Control
02400 Storm Drain System
02410 Subsurface Drains
02445 Fences and Gates
02453 Traffic Signals
02480 Landscape Soil Preparation
02483 Planting
02486 Irrigation
02499 Landscape Maintenance
02500 Paving and Surfacing
02510 Crack Sealing
02520 Slurry Seal
02530 Curb Ramps and Other Minor Concrete Facilities
02580 Traffic Striping and Signing
02710 Potable Water System Piping and Accessories
02720 Sanitary Sewer Collection System

Division 3

03300 Minor Concrete

Division 9

09900 Painting

Division 16

16550 Street Lighting System

PART IV – STANDARD DRAWINGS

Miscellaneous

M-1 Survey Monument Installation with Frame
M-2 Brass Cap for Survey Monument
M-3 Chain Link Fence

Parks

PR-1 Tree Staking
PR-2 Tree Well
PR-3 Root Control Barrier - Details
PR-4 Root Control Barrier - Typical Specification
PR-5 Reduced Pressure Backflow Prevention Device
PR-6 Pop-Up Sprinkler Head Installation
PR-7 Remote Control Valve Detail
PR-8 Pressure Gauge Detail
PR-9 Quick Coupler Installation
PR-10 Gate Valve Assembly
PR-11 Irrigation Thrust Blocks for Main Lines
PR-12 Median Planting Clearances
PR-13 Street Tree Clearances
PR-14 Sidewalk Tree Placement
PR-15 Dripline Subsurface Irrigation System Details
PR-16 Typical Dripline Layouts
PR-17 Shrub/Tree Bubbler
PR-18 Trunk and Branch Structure
PR-19 Tree Planting Details

Streets

S-1 Street Design Criteria, Typical Section, Intersection & Cul-De-Sac
S-2 Curb, Gutter, and Sidewalk
S-3A Driveway (Residential)
S-3B Driveway (Commercial)
S-4 Curb Ramp Details - I
S-5 Curb Ramp Details - II
S-6 Accessible Parking Details - I
S-7 Accessible Parking Details - II

S-8 Typical Pipe Trench-Excavation and Backfill Requirements
S-9 Street Trenching and Patching
S-10 Typical Street Lighting
S-11 Typical Street Name Sign and Sign Location
S-12 Street Name Sign Construction
S-13 Internally Illuminated Street Name Sign - General
S-14 Internally Illuminated Street Name Sign - Fabrication Details
S-15 Internally Illuminated Street Name Sign - Bracket Details - I
S-16 Internally Illuminated Street Name Sign - Bracket Details - II
S-17 Internally Illuminated Street Name Sign - Bracket Details - III
S-18 Single Face Monument Sign Details - I
S-19 Single Face Monument Sign Details - II
S-20 Typical Traffic Signs Fabrication and Installation
S-21 Traffic Sign - Median Installation
S-22 Traffic Striping Markers
S-23 Parking Meter Post
S-24 Pedestrian Push Button Instructions
S-25 Off Street Parking Stall Criteria
S-26 Construction Project Identification Sign

Storm Drain

SD-1 Catch Basin - Plan, Section and Gutter Depressions
SD-2 Catch Basin - Section and Details
SD-3 Catch Basin - With Trap and Cleanout for Combined Sewer/Storm System
SD-4 Storm Drain Manholes - For Pipe 48" Diameter or Smaller
SD-5 Curb Face Drainage Outlet

Sanitary Sewer System

SS-1 Non-Pressure Type Manhole Frame and Cover
SS-2 Pressure Type Manhole Frame and Cover
SS-2A Polyethylene Manhole Adjustment Ring Slope Design
SS-3 Sanitary Sewer Manhole (Cast In Place)
SS-5 Sanitary Sewer Testing Tee
SS-6 Grease & Sand Interceptor
SS-6A Grease Interceptor
SS-7 Sewer Lateral Details (For Pipes Smaller Than 6-Inch)
SS-7A Sewer Lateral Connections (For 6-Inch Pipe and Larger)
SS-8 New Sewer Pipe Support Across Trenches
SS-9 Side Sewers at Utility Intersections
SS-10 Trench Dam
SS-11 Flexible Connection at Manhole Tie-In (When Required)
SS-12 Clean Out & Backwater Valve
SS-13 New Utility Pipe Crossing Existing Sewer Pipe

Water System

W-1 1" Water Service Lateral -Connection for 3/4" or 1" Meter
W-2 Water Service Lateral - 1" and 2" Combination Service Connections
W-3 2" Water Service Lateral for 1-1/2" or 2" Meter
W-4 Water Service Lateral - 3" and Larger
W-5 Water Main Connection - Fire Hydrants (Residential Area)

W-5A Water Main Connection – Fire Hydrant Valve Detail (Residential Area)
W-6 Water Main Connection - Fire Hydrants (Commercial Area)
W-7 Below Ground Blow-Off Details
W-7A Above Ground Blow-Off Details
W-8 Air Release Valve Assembly
W-8A Reduced Pressure Backflow Prevention Device
W-9 Fire Detector - Check Valve and Connections
W-9A Fire Service For Multi-Storey Residential Building (As Required)
W-10 Water Main Thrust Blocks
W-11 Angle Marker Details

CITY OF DALY CITY

GENERAL CONDITIONS, STANDARD SPECIFICATIONS & DRAWINGS

PART I – INTRODUCTION	(Green Pages)
PART II – GENERAL CONDITIONS	(Blue Pages)
PART III – TECHNICAL SPECIFICATIONS	(Yellow Pages)
PART IV – STANDARD SPECIFICATIONS	(White pages)

PART I – INTRODUCTION

(Green Pages)

INTRODUCTION

SCOPE

The City of Daly City General Conditions, Standard Specifications and Drawings have been prepared to assist all persons engaged in the design or construction of landscaping, roads, storm drains, water and sewer facilities, and miscellaneous public works projects intended for public use. These plans and specifications are generally applicable to all construction within the City of Daly City, and to certain improvements within the North San Mateo County Sanitation District. Certain provisions of the *General Conditions* (Section 00700) related to payments, retentions, liquidated damages, City furnishing the plans and Special Provisions, and the right-of-way delays are applicable to projects funded by the City and its subsidiary agencies only.

This book incorporates all standards for construction of City public service facilities.

The General Conditions, Standard Specifications and Drawings have been divided into four parts, each of which is briefly described herewith.

1. Introduction

   This Section includes a general description of the intent and purpose of the City of Daly City's Standard Specifications and Drawings and abbreviations used herein.

2. Part II - General Conditions

   This Section covers the requirements for permits, licensing, public safety, work hours, shop drawings, and other legal requirements for construction of public service facilities within the applicable jurisdiction of the City and its subsidiary agencies.

3. Part III - Technical Specifications

   This Section includes the construction standards which must be followed in any work which, upon completion, will be accepted by the City or its subsidiary agencies. This includes work completed under subdivision and/or development agreements and under contracts with the City or its subsidiary agencies. These sections reference other standards, specifications and drawings as appropriate.

4. Part IV - Standard Drawings

   This Section includes drawings which must be followed in any work which, upon completion, will be accepted by the City or its subsidiary agencies. This includes work completed under subdivision and/or development agreements and under contracts with the City or its subsidiary agencies.

ADDENDA AND ERRATA

Corrections, additions, or other modifications may be issued after the publication of this document. Users should confirm that they are in possession of the latest version of any of the components of this document. Contact the City of Daly City Engineering Division at (650) 991-8064 for further information. Users are encouraged to notify the Engineering Division concerning any errors or omissions in this document.

ABBREVIATIONS

The following abbreviations are used throughout:

AASHTO	American Association of State Highway Transportation and Officials
ABAG	Association of Bay Area Governments
ASTM	American Society for Testing and Materials
AWWA	American Water Works Association
CALOSHA	California Occupational Safety and Health Administration
CFR	Code of Federal Regulations
DCRA	Daly City Redevelopment Agency
DHS	State of California Department of Health Services
DOSH	State of California Department of Safety and Health
ESO	State of California Electrical Safety Orders
ETL	Electrical Testing Laboratories
NEMA	National Electrical Manufacturers Association
NETA	National Electrical Testing Association
NSMCSD	North San Mateo County Sanitation District
OSHA	Occupational Safety and Health Administration
UL	Underwriter's Laboratory
USDA	United States Department of Agriculture
USEPA	United States Environmetal Protection Agency

- End of Section -

PART II – GENERAL CONDITIONS

(Blue Pages)

SECTION 00700 – GENERAL CONDITIONS

1. Contract and Contract Documents 1
2. Definitions 1
3. Conflicting Conditions 4
4. Pre-construction Conference 4
5. Plans and Specifications 4
6. Submittal Schedule 4
7. Additional Instructions and Detail Drawings 4
8. Record Drawings ("As-Builts") and Preconstruction Video 5
9. Grade Certificates 5
10. Shop or Setting Drawings 6

11. Compliance With Laws and Regulations 6
12. Employment Of Illegal Aliens 6
13. Contractor's Obligations – Cooperation with Others 7
14. Employees Of Contractors 7
15. Apprentices and Trainees 7
16. Superintendence By Contractor 8
17. Subcontracting 8
18. Subcontract Documents 9
19. Separate Contracts 9
20. Assignments 9

21. Notice and Service Thereof 9
22. Surveys 9
23. Permits, Licenses and Regulations 10
24. Reports, Records and Data 10
25. Payrolls and Basic Records 10
26. Underground Service Alert (USA) Markings 10
27. Errors and Discrepancies Noted by Contractor 10
28. Construction Project Signs 11
29. Potholing Existing Utilities/High Risk Facilities – Differing Site Conditions 11
30. Removal/Relocation of Public Service or Other Equipment or Structures 14

31. Shutdown/Tie-Ins of Existing Utilities 14
32. Construction Schedule, Progress Meetings, Commencement of Work, and Periodic Estimates 14
33. Time for Completions and Liquidated Damages 15
34. Contractor Storage Area 16
35. Contractor's Parking 17
36. Construction Work Hours Regulations 17
37. Contractor Use of Premises 17
38. Overtime Requirements 17
39. Safety and Health Regulations for Construction 18
40. Hazardous Materials and Worker Safety 18

41. Materials, Services and Facilities 19
42. Contractor's Title to Material 19
43. Inspection and Testing of Materials 19
44. "Or Equal" Clause 19
45. Patents, Licenses and Royalty Fees 20
46. Weather Conditions 20

47. Protection of Work and Property - Emergency 21
48. Use of Premises, Preservation of Property and Damages 22
49. Continuous Use of Existing Building 23
50. Maintaining Public and Traffic Safety 23

51. Hauling 23
52. Maintaining Access 23
53. "No Parking" in Construction Zones 24
54. Cleanup and Removal of Debris 24
55. Hold Harmless 25
56. Contractor's and Subcontractor's Insurance 25
57. Faithful Performance and Payment (Labor and Material) Bonds 30
58. Consent of Sureties 30
59. Engineer Authority 30
60. Prohibited Interests 31

61. Inspection 31
62. Land and Rights-of-Way 32
63. Temporary Work Easements 32
64. Work Done By Others 32
65. Beneficial Use 33
66. Payment to Contractor 33
67. Payment for Mobilization 35
68. Withholding Payments 35
69. Final Payment – Effect Thereof 36
70. Satisfaction of Liens 36

71. Payments By Contractor 37
72. Retention of Legal Rights 37
73. Quantities of Estimate 37
74. Changes In Work 37
75. Correction of Work 38
76. Claims for Extra Costs 39
77. Claims and Protests 40
78. Suspension of Work 40
79. Unanticipated Concealed Conditions 40
80. Final Review/Acceptance of Project Work 41

81. Mutual Responsibility of Contractors 41
82. Guaranty 42
83. Equal Employment Opportunity 42
84. Area Affirmative Action Plan 43
85. Prevailing Wage 44
86. Clean Air Act and Federal Water Pollution Control Act 44
87. Stormwater Pollution Prevention Requirements 45
88. Sound Control Requirements 46
89. Dust Alleviation and Control 46
90. National Historic Preservation Act of 1966 46
91. Required Provisions Deemed Inserted 46
92. Right of the City to Terminate Contract 46
93. Failure to Complete Work 47
94. Ownership of Work Product 47
95. Noncollusion Affidavit to be Executed by Bidder and Submitted With Bid 47

96. Certification for Contracts, Grants, Loans, and Cooperative Agreements 48
97. Five Year Moratorium On New Asphalt Pavements 48

SECTION 00700 - GENERAL CONDITIONS

1. CONTRACT AND CONTRACT DOCUMENTS

The Contract documents shall form part of the contract, and the provisions thereof shall be as binding upon the parties hereto as if they were herein fully set forth. The table of contents, titles, headings, running headlines and marginal notes contained herein and in said documents are solely to facilitate reference to various provisions of the contract documents and in no way affect, limit or cast light on the interpretation of the provisions to which they refer.

Prior to submitting the Bid Proposal, it shall be the Contractor's responsibility to obtain all reference material required for the successful performance of the contract, including, but not limited to, the latest edition of the *"City of Daly City General Conditions, Standard Specifications and Drawings."*

Except as otherwise specified herein or in the Special Provisions, no separate payment will be made for Contractor's conformance with applicable provisions of Section 00700. All costs for such conformance shall be included in bid prices, or otherwise borne by the contractor.

2. DEFINITIONS

(a) *Acceptance by City:* Action by the City Council, usually in the form of a resolution, stating that the City Council accepts the contractor's work based on the Engineer's certification that all provisions of the contract have been fully complied with and to the satisfaction of the Engineer; or in the case of certain improvements, action to accept the Contractor's work by the Board of Directors of the North San Mateo County Sanitation District, a subsidiary agency of the City of Daly City.

(b) *Agency:* See *Daly City Redevelopment Agency.*

(c) *Apprentice:* (1) A person employed and individually registered in a bona fide apprenticeship program registered with the U. S. Department of Labor, Bureau of Apprenticeship and Training, or with a State apprenticeship agency recognized by the Bureau; or (2) a person in the first ninety (90) days of probationary employment as an apprentice in such an apprenticeship program, but who has been certified by the Bureau of Apprenticeship and Training or a State Apprenticeship Council (where appropriate) to be eligible for probationary employment as an apprentice.

(d) *Bidder:* Any individual, partnership, firm, or corporation acting directly or through a duly authorized representative, submitting a proposal to perform the work on the project.

(e) *Calendar Days:* See Item (p) - *"Days"*

(f) *City:* The City of Daly City, California and/or its subsidiary agencies, i.e. North San Mateo County Sanitation District, Daly City Redevelopment Agency, etc., acting through the City Council, the District or other duly authorized authority.

(g) *City Engineer or Engineer:* The duly appointed City Engineer of Daly City, acting directly or through authorized agents.

(h) *City Standards:* See *Standard Specifications.*

(i) *Contract:* The contract documents executed by the City and the Contractor.

(j) *Contract Documents:* The Notice Inviting Bids, the accepted bid, the Non-Collusion Affidavit, the Agreement, the Faithful Performance Bond, the Labor and Materials Bond, insurance coverage (including but not limited to the insurance policy, any endorsements thereto, and certificates of insurance), the Plans, the Special Provisions, the *City of Daly City General Conditions, Standard Specifications and Drawings*, referenced Specifications, Change Orders, and all addenda setting forth any modifications or interpretations of any of the said documents. Unless otherwise specified, all referenced specifications or standards shall be the current edition.

(k) *Contract Plans and Specifications:* The directions, provisions, and requirements contained in the contract documents pertaining to the method and manner of performing the work on the project, or to the quantities, and the qualities of the materials to be furnished under the contract.

(l) *Contractor:* The individual, partnership, firm, or corporation executing the contract, acting directly or through lawful agents or employees, who is primarily liable for the acceptable performance of the work for which he has contracted, and also the payment of all legal debts pertaining to the work.

(m) *Council:* The duly elected City Council of the City of Daly City.

(n) *County:* The County of San Mateo.

(o) *Daly City Redevelopment Agency:* The Agency. A political subdivision of the State of California, whose Board of Directors are the City Council of Daly City, and whose purpose is the redevelopment of certain portions of the City's older business areas.

(p) *Days:* The word "days" shall mean calendar days unless specifically noted otherwise.

(q) *District:* See *North San Mateo County Sanitation District.*

(r) *Engineer:* See *City Engineer.*

(s) *Faithful Performance Bond:* The approved form of security furnished by the Contractor and Contractor's surety as a guarantee that the Contractor will be responsible for the entire and satisfactory fulfillment of the contract.

(t) *Inspector:* An authorized representative of the Engineer assigned to make all necessary inspection of the work performed, or being performed, or of the materials furnished or being furnished by the Contractor.

(u) *Payment (Labor and Material) Bonds:* The approved form of security furnished by the Contractor and Contractor's surety as a guarantee that all bills and accounts for materials and labor used in the construction of the work on the project will be paid in full, as provided by law.

(v) *North San Mateo County Sanitation District:* The District. A subsidiary agency of the City of Daly City for the purpose of providing sewer collection and treatment services and maintenance of the facilities required therefor.

(w) *Ordinance:* The General Ordinances of the City, published by order of the City Council, as embodied in the Code of the City of Daly City.

(x) *Plans:* The official plans, working drawings or supplemental drawings or exact reproductions thereof, approved by the Council or Engineer, which show the locations, character, dimensions and details of the work on the project and the work to be done. The plans are to be considered as a part of the contract documents, complementary to the specifications.

(y) *Proposal Form:* The approved form on which the written offer or formal bid is to be prepared and submitted.

(z) *Provide:* The term "provide" shall mean furnish, install, and connect.

(aa) *Special Provisions:* Contract provisions specifically applicable to a particular project, i.e. time for completion, liquidated damages; and any changes or additions to the City Standard Specifications.

(ab) *Standard Drawings:* Those drawings showing the details of design and construction of various City or District work and material standards. Generally, the work shown on these details is located within the public easement, right-of-ways, and common areas.

(ac) *Standard Specifications:* The term sometimes used to refer to the latest edition of the *"City of Daly City General Conditions, Standard Specifications and Drawings"*.

(ad) *State Specifications:* Whenever, in these specifications, reference is made to the State Specifications and/or the State Standard Drawings, when indicated, it shall mean the latest edition of the State of California, Business and Transportation Agency, Department of Transportation Standard Specifications and/or Standard Plans. Whenever the following terms are used in the State Specifications or the State Standard Plans, the terms shall mean *"The City Engineer of the City of Daly City"*:

- Department of Transportation
- Director of Transportation
- State Highway Engineer
- State Engineer
- State

(ae) *State Standard Plan (State Standard Drawing):* See *State Specifications*.

(af) *Subcontractor:* An individual, partnership, firm or corporation supplying labor and materials, or labor only, or equipment for work at the site of the project whose contractual relationship is with the Contractor and not with the City.

(ag) *Surety or Sureties:* The corporate bodies which are admitted surety insurers, which are bound by the Faithful Performance Bond and the Labor and Materials Bond with and for the Contractor, and which are engaged to be responsible for the entire and satisfactory fulfillment of the contract and for the payment of all lawful debts incurred in fulfilling the contract.

(ah) *Trainee:* A person receiving on-the-job training in a construction occupation under a program which is approved (but not necessarily sponsored) by the U. S. Department of Labor, Manpower Administration, Bureau of Apprenticeship and Training, and which is reviewed from time to time by the Manpower Administration to insure that the training meets adequate standards.

(ai) *Work on (at) the Project:* Work to be performed at the location of the project, including the transportation of materials and supplies to or from the location of the project by employees of the Contractor and any Subcontractor complete and functional for the intended use.

(aj) *Working Days:* Any day except Saturdays, Sundays, legal holidays observed by the City, and days on which the Contractor is specifically permitted by the Engineer to suspend construction operations on account of inclement weather or conditions resulting therefrom, or labor disputes.

3. CONFLICTING CONDITIONS

Any provision in any of the contract documents which may be in conflict or inconsistent with any of the paragraphs in any other contract document shall be void to the extent of such conflict or inconsistency in the following order of diminishing precedence:

- Plans
- Special Provisions
- City Standard Specifications
  (Includes General Conditions and Standard Drawings)
- State Standard Specifications and Standard Plans

Any work called for on the plans and not mentioned in the specifications, or vice versa shall be performed as though fully set forth in both.

4. PRE-CONSTRUCTION CONFERENCE

Between the period of awarding the contract and actual construction, it shall be the Engineer's option to call a pre-job conference for the project. The Contractor, and Contractor's representative in charge of the project shall be in attendance, and various utility companies affected by the work, may be invited to discuss the contractor's schedule, present possible problems and solutions concerning the individuals represented at the meeting, and make everyone aware of who and how to contact interest parties for emergencies and unforeseen problems.

A preliminary construction schedule for the project shall be submitted at this time outlining the major phases of work at the times they will be constructed.

5. PLANS AND SPECIFICATIONS

After the award of the contract, up to seven (7) sets of plans and Special Provisions will be furnished the Contractor at no cost. Sets in addition to these, as well as the *General Conditions, Standard Specifications and Drawings*, will be furnished, upon request, at the charge rates specified in the Notice Inviting Bids.

The Contractor shall keep a complete set of the *Contract Plans and Specifications*, including Addenda and Change Orders at the work site.

6. SUBMITTAL SCHEDULE

A submittal schedule shall be furnished to the Engineer to review within 10 working days after the Contract Award in accordance with the guidelines specified in City Standard Specifications, Section 01340.

7. ADDITIONAL INSTRUCTIONS AND DETAIL DRAWINGS

The Contractor may be furnished additional instructions and detail drawings as necessary to carry out the work included in the contract and to clarify the design.

The additional drawings and instructions thus supplied to the Contractor will complement with the contract documents. The Contractor shall carry out the work in accordance with the additional detail drawings and instructions. The Contractor and the Engineer will prepare jointly (a) a schedule, fixing the dates at which special detail drawings will be required, such drawings, if any, to be furnished by the Engineer in accordance with said schedule, and (b) a schedule fixing the respective dates for the submission of shop drawings, the beginning of manufacture testing and installation of materials, supplies and equipment, and the completion of the various parts of the work; each such schedule to be subject to change from time to time in accordance with the progress of the work.

All drawings signed by the Engineer and delivered to the Contractor after execution of the Agreement, and all revisions of these and the plans or other drawings, shall be deemed written instruction to the Contractor.

8. RECORD DRAWINGS (*"AS-BUILTS"*) AND PRECONSTRUCTION VIDEOS

The Contractor shall mark on one set of City furnished full size prints, , any and all deviations from plan dimensions, elevations or orientations to include without limitations the horizontal and vertical locations of all utilities encountered not originally shown on plans. The Contractor shall submit same in good condition to the Engineer upon completion of the job and before acceptance of the project. At the work site, the Contractor shall maintain a neat and legible set of marked prints which shall be updated at least once each day and shall be available to the Engineer for review. Progress payments may be withheld if as-built plans are not current to the stage of project at the time of Engineer's review. The Contractor shall review the updated record prints with the City at least once before requesting each progress payment. At the completion of construction, the Final Contract Payment shall be contingent upon delivery to the Engineer of one (1) set of full size plans on which the Contractor has transferred all "as-built" information.

Prior to initiation of any construction work, the Contractor shall, at his expense, provide to the City a copy of a video recording in VHS format showing clearly and completely existing conditions throughout the work site and the immediate adjacent areas. Contractor shall verify the scope of the video with the Engineer. Video shall be of at least 10 minutes in duration. The video taping shall be of good quality and shall document areas and items to be affected by the work including street pavement conditions, road improvements, existing trees and street scapes along the entire work route. The location of taping shall be clearly identifiable and a concurrent voice narrative in the recording shall describe concisely the project work and the noteworthy items affected by the project. The video tape shall be labeled as to project title and date of recording. The date of the day of recording shall be indicated in the video.

For projects when the size and scope of the project warrants less videography or fewer photographs, the Engineer may, at his discretion, approve reductions in requirements proposed by the Contractor.

9. GRADE CERTIFICATES

For the following work Contractor shall provide to the City "as-built" Grade Certificates signed by a Land Surveyor or qualified Civil Engineer registered in the State of California for the following work:

(a) top of curb and lip of gutter elevations at intervals of no more than 50 (fifty) feet, and at both ends of the curb returns;

(b) back of sidewalk grades at intervals of 50 (fifty) feet;

(c) rim and invert elevation of each drain inlet, manhole, and sewer structure;

(d) roadway sub-base, base, and finish grade elevations for new roadway construction; and

(e) finish grades for a grading operation.

Payment for providing the required "as-built" Grade Certificates shall be included in the unit bid prices for various bid items.

City may withhold the whole or any part of the final payment to such an extent as may be reasonably necessary to protect City from loss resulting from Contractor's failure to provide the required "as-built" Grade Certificates to City.

10. SHOP OR SETTING DRAWINGS

The Contractor shall submit promptly to the Engineer shop or setting drawings prepared in accordance with the requirements of Section 01340, *"Submittals,"* of the Daly City *Standard Specifications*.

11. COMPLIANCE WITH LAWS AND REGULATIONS

The Contractor is assumed to be familiar with all Federal, State, and local laws, codes, ordinances and regulations which in any manner affect those engaged or employed in the work or the materials or equipment used in or upon the site or in any way affect the conduct of the work on the project. No pleas of misunderstanding or ignorance on the part of the Contractor will in any way serve to modify the provisions of the contract.

The Contractor at all times shall observe and comply with all Federal, State, and local laws, codes, ordinances and regulations in any manner affecting the conduct of the work on the project, and the Contractor and Contractor's surety shall indemnify and save harmless the City, its subsidiary agencies and their officers, agents, and employees against any claims or liability arising from or based on the violation of any such law, ordinance, regulation, order, or decree, whether by Contractor, the Contractor's employees, or the Contractor's subcontractors.

Precaution shall be exercised at all times for the protection of persons, including employees, and property. The safety provisions of applicable laws, building and construction codes shall be observed. Machinery and equipment shall be guarded and all hazards eliminated in accordance with the safety provisions of the Manual of Accident Prevention in Construction, published by the Associated General Contractors of America, to the extent that such provisions are not in contravention of any applicable law. The Contractor shall be solely responsible for safety of the project and all operations associated therewith.

All rules, orders, and regulations prescribed by State and Federal Agencies, including but not limited to Industrial Accident Commission (IAC) of the State of California and the California Occupational Safety and Health Administration (CALOSHA) shall be observed. The Contractor shall provide and maintain all necessary barriers, guards, temporary bridges, watchperson and lights. Warning lights in the form of lanterns or flares shall be in place and lighted on all construction work on public streets, highways, or rights-of-way from sunset to sunrise.

12. EMPLOYMENT OF ILLEGAL ALIENS

During the performance of this contract, the Contractor agrees not to employ on such project any alien in the United States in violation of the Immigration and Nationality Act or any other law, convention, or treaty of the United States relating to the immigration, exclusion, deportation, or expulsion of aliens.

The Contractor will include the provisions of the preceding paragraph in every subcontract so that such provisions will be binding upon each subcontractor.

13. CONTRACTOR'S OBLIGATIONS - COOPERATION WITH OTHERS

The Contractor shall and will, in a competent manner, do and perform all work and furnish all supplies and materials, machinery, equipment, facilities and means, except as herein otherwise expressly specified, necessary or proper to perform and complete all the work required by this contract, within the time herein specified, in accordance with the provisions of this contract and said specifications and in accordance with the plans and drawings covered by this contract and any and all supplemental plans and drawings, and in accordance with the directions of the Engineer as given from time to time during the progress of the work.

The Contractor shall furnish, erect, maintain and remove such construction plant and such temporary works as may be required. The Contractor shall observe, comply with, and be subject to all terms, conditions, requirements, and limitations of the contract documents, and shall do, carry on, and complete the entire work to the satisfaction of the Engineer and the Owner.

At all times the Contractor shall cooperate with other contractors, city personnel and public, and to the fullest extent possible coordinate his work to provide the least inconvenience possible to others.

14. EMPLOYEES OF CONTRACTORS

The Contractor, or any subcontractor doing work on the project, shall employ such superintendents and workers as are careful, competent, and skilled in the trade for which they were hired with the exception of apprentices and trainees as described in Section 13. The Engineer may demand the removal from the project of any person or persons employed by the Contractor in, about, or upon the work who shall exhibit misconduct, incompetence, or negligence in the proper performance of their duties, or neglect or refuse to comply with the directions givenby the authorized City personnel, and such person or persons shall not be employed on the project again without the written consent of the Engineer. Neither the City nor the Contractor shall employ or otherwise engage the service of any employee of the other party.

15. APPRENTICES AND TRAINEES

Apprentices will be permitted to work as such only when they are registered individually, under a bona fide apprenticeship program registered with a State apprenticeship agency which is recognized by the Bureau of Apprenticeship and Training, U.S. Department of Labor; or, if no such recognized agency exists in a state, under a program registered with the Bureau of Apprenticeship and Training, U.S. Department of Labor.

Attention is directed to the provisions in Sections 1777.5 and 1777.6 of the Labor Code and in accordance with the regulations of the California Apprenticeship Council concerning the employment of apprentices by the Contractor or any subcontractor.

It shall be the responsibility of the Contractor to abide by the provisions of Sections 1777.5 and 1777.6 of the Labor Code and to require all subcontractors employed by or contracting with Contractor to abide by said provisions. Contractor shall furnish City, any and all evidence of compliance with these code sections when requested by City.

For willful failure to comply with Section 1777.5 of the Labor Code, the Contractor shall be denied the right to bid on a Public Works contract for a period of one (1) year from the date that such determination is made.

16. SUPERINTENDENCE BY CONTRACTOR

At the site of the work, the Contractor shall employ a construction superintendent who shall have full authority to act for the Contractor. It is understood that such representative shall be acceptable to the Engineer.
The Contractor shall give to the work the constant attention necessary to facilitate the progress thereof and shall cooperate with the Engineer and inspectors and with other contractors in every way possible. The Contractor shall keep on the work at all times during its progress, a competent superintendent and any necessary assistants, all of whom shall be satisfactory to the Engineer.

The Contractor's superintendent shall not be changed except with the consent of the Engineer, unless this superintendent proves to be unsatisfactory to the Contractor and ceases to be in the Contractor's employ. The Contractor's superintendent shall represent the Contractor and all directions given shall be as binding as if given to the Contractor.

The Contractor shall conform to all instructions, rulings, and decisions of the Engineer, provided that the Contractor may require such in writing, and the Contractor shall be liable to the City for any failure to conform thereto without delay.

17. SUBCONTRACTING

The Contractor may utilize the services of specialty subcontractors on those parts of the work which, under normal contracting practices, are performed by specialty subcontractors.

The Contractor shall be fully responsible to the City for the acts and omissions of the Contractor, the Contractor's subcontractors, and of persons either directly or indirectly employed by them.

The Contractor shall cause appropriate provisions to be inserted in all subcontracts relative to the work to bind subcontractors to the Contractor by the terms of the General Conditions and other contract documents insofar as applicable to the work of subcontractors and to give the Contractor the same power as regards terminating any subcontract that the City may exercise over the Contractor under any provision of the contract documents.

Nothing contained in this contract shall create any contractual relations between any subcontractor and the City.

In compliance with the provisions of Sections 4100-4114, inclusive, of the Public Contract Code of the State of California, and any amendments thereof, the Contractor shall not, without the written consent of the City, either:

(a) Substitute any person as subcontractor in place of the subcontractor designated in the original bid, or permit any such subcontractor to be assigned or transferred or allow the subcontract work to be performed by anyone other than the original subcontractor listed in the bid without complying with Public Contract Code Section 4107.

(b) Sublet or subcontract any portion of the work in excess of one-half of one percent (0.5%) of the Contractor's total bid, or ten thousand dollars ($10,000) in the case of construction of streets and highways, whichever is greater, as to which no subcontractor was designated in the original bid. Subletting or subcontracting in this regard shall be permitted only in case of public emergency or necessity, and then only after a City finding reduced to writing as a public record of City setting forth the facts constituting the emergency or necessity.

If the Contractor fails to specify a subcontractor for any portion of the work to be performed under the contract in excess of one half of one percent (0.5%) of the Contractor's total bid, or ten thousand dollars ($10,000) in the case of construction of streets and highways, whichever is greater, Contractor agrees to perform that portion.

If the Contractor violates any of the provisions of said Section 4100-4114, inclusive, of said Public Contract Code, or any amendments thereof, the Contractor violates this contract and the City may cancel the contract. After any such violation, the Contractor shall be penalized to the extent of twenty percent (20%) of the amount of the subcontract involved. Funds recovered through the application of this penalty will be paid to the State Treasurer.

18. SUBCONTRACT DOCUMENTS

All of the conditions set forth herein shall be part of every subcontract and shall be inserted by the Contractor into said subcontract, and shall further provide that the conditions hereof shall be binding upon each and every subcontractor.

19. SEPARATE CONTRACTS

The Contractor shall coordinate operations with those of other Contractors. Cooperation will be required in the arrangement for the storage of materials and in the detailed execution of the work. The Contractor, including subcontractors, shall keep informed of the progress and the detail work of other Contractors and shall notify the Engineer immediately of lack of progress or defective work on the part of other contractors. Failure of a Contractor to keep informed of the work progressing on the site and failure to give notice of lack of progress or defective work by others shall be construed as acceptance by the Contractor of the status of the work as being satisfactory for proper coordination with the Contractor's work.

20. ASSIGNMENTS

The Contractor shall not assign the whole or any part of this contract or any moneys due or to become due hereunder without written consent of the City. In case the Contractor assigns all or any part of any moneys due or to become due under this contract, the instrument of assignment shall contain a clause substantially to the effect that it is agreed that the right of the assignee in and to any moneys due or to become due to the Contractor shall be subject to prior claims of all persons, firms, and corporations for services rendered or materials supplied for the performance of the work called for in this contract.

21. NOTICE AND SERVICE THEREOF

Any notice to any Contractor from the City relative to any part of the contract shall be in writing and considered delivered and the service thereof completed, when said notice is posted, by certified or registered mail, to the said Contractor's last given address, or delivered in person to said Contractor or authorized representative on the work.

22. SURVEYS

Contractor shall lay out all work from base lines, bench marks, and reference points, as shown on the drawings and as provided by the City.

23. PERMITS, LICENSES AND REGULATIONS

Contractor shall secure all necessary permits and licenses and pay all fees and taxes required by law and the costs therefor shall be included in the bid prices.

The Contractor shall be required to have a State of California Department of Transportation (CALTRANS) Encroachment Permit for all work performed within State rights-of-way.

No charges will be made for City-issued permits. The Contractor and all subcontractors shall pay for and receive a Daly City Business License(s).

The Contractor shall comply with all laws, ordinances, rules, orders, and regulations relating to the performance of the work, the protection of adjacent property, and the maintenance of passageways, guard fences, or other protective facilities.

24. REPORTS, RECORDS AND DATA

The Contractor shall submit to the City such schedule of quantities and costs, progress schedules, payrolls, reports, estimates, records, and other data as the Owner may request concerning work performed or to be performed under this contract.

The Contractor agrees to provide any and all information and file any and all necessary forms as required by any State or Federal Agency, or required under any State or Federal law.

25. PAYROLLS AND BASIC RECORDS

The Contractor shall submit weekly a copy of all payrolls to the City within seven (7) calendar days after work has been performed. The copy shall be accompanied by a statement signed by the employer or employer's agent indicating that the payrolls are correct and complete, that the wage rates contained therein are not less than those determined by the Department of Industrial Relations and that the classifications set forth for each laborer or mechanic conform with the work he performed. The Prime Contractor shall be responsible for the submission of copies of payrolls of all subcontractors.

26. UNDERGROUND SERVICE ALERT (USA) MARKINGS

After work has been completed on the project and before requesting final inspection, the contractor shall, at his own expense, remove all USA markings and such other markings that were painted on the pavement, sidewalk, curb, etc. used to guide the contractor in the pursuance of his work, using methods acceptable to the Engineer. Removal of said markings shall not, in any way deface, destroy or otherwise render surface of structure unsightly or aesthetically inferior to the adjacent surface.

27. ERRORS AND DISCREPANCIES NOTED BY CONTRACTOR

The Contractor shall supervise the work. The Contractor shall carefully study and compare all drawings, specifications and other instructions and shall at once report to the Engineer, any error, inconsistency or omission discovered.

If the Contractor, either before commencing work or in the course of the work, finds any discrepancy between the plans and specifications as they relate to the physical conditions at the site of the work, or finds any error or omission in any of the drawings or in any survey, the Contractor shall promptly notify the Engineer, in writing, of such discrepancy, error, or omission.

If the Contractor observes that any drawings or specifications are at variance with any applicable law, ordinance, regulation, order, or decree, the Contractor shall promptly notify the Engineer, in writing, of such conflict and shall not proceed with the work until so ordered by the Engineer. The Contractor shall not take advantage of any apparent errors or omissions in the plans or specifications.
The Contractor shall promptly and before such conditions are disturbed, notify the Engineer in writing of (1) subsurface or latent physical conditions of the site differing materially from those indicated, or (2) unknown physical conditions at the site of an unusual nature, differing materially from those ordinarily encountered and generally recognized as inherent in work of the character provided for in this contract.

Until instructions are given, any work done by the Contractor that is covered under this Section, either directly or indirectly, after discovery of such error, discrepancy, or conflict, will be at Contractor's own risk and Contractor shall bear all costs arising therefrom. The Contractor may continue to work in areas that are not affected.

28. CONSTRUCTION PROJECT SIGNS

The Contractor shall provide and maintain two (2) construction project information signs in the vicinity of the construction area during the construction period as per contract stipulations. Construction signs shall be in place at the start of construction activity. Liquidated damages may be assessed if signs are not installed within forty (40) calendar days of project award. Location of sign will be as directed by the City. Materials and design information for the signs shall be as specified in the project drawings.

29. POTHOLING EXISTING UTILITIES/HIGH RISK FACILITIES – DIFFERING SITE CONDITIONS

(a). At least forty-eight (48) hours prior to beginning any underground excavation (including potholing) one foot (1') or more in depth, the Contractor shall notify Underground Service Alert at (800) 642-2444 for location and marking of participating existing utilities. The Contractor shall also notify the Engineer at least forty-eight (48) hours prior to beginning potholing operation, so that the Contractor's operations may be observed.

(b). The precise location of underground facilities can only be determined by careful probing or hand digging in compliance with Article 6 of the OSHA Construction Safety Orders which states in part:

> *"Prior to opening an excavation, effort shall be made to determine whether underground installations, i.e., sewer, water, fuel, electric lines, etc., will be encountered, and if so where such underground installations are located. When the excavation approaches the approximate location of such an installation, the exact location shall be determined by careful probing or hand digging, and, when it is uncovered, adequate protection shall be provided for the existing installation."*

The location of known existing utilities and pipelines are shown on the Drawings in their approximate locations. Some of the locations include multiple conduits. The Contractor shall exercise care in avoiding damage to those facilities which are to remain in service subsequent to the construction of the particular new facility involved and will be held responsible for their repair and other related costs if damaged. The Contractor shall also exercise care in maintaining those pipes and facilities required for continuing operation of the existing facilities until such time as they can be abandoned. There is no guarantee that all utilities or obstructions are shown or that the locations indicated are accurate.

(c). The Contractor shall exercise extreme caution in working in the area adjacent to the existing pipelines and utility services. It is essential that all the existing facilities be maintained in service. Construction of the connections between the existing facilities and the new facilities shall be at times and during periods acceptable to the City. The Contractor shall advise the Engineer in writing of his proposed construction schedule for these connections at least forty-eight (48) hours in advance.

(d). The Contractor shall, at least five (5) days before construction in the vicinity, uncover all piping and conduits, and confirm the clearances (potholing), where crossings, interference, or connections are shown on the Drawings, prior to the preparation of pipe shop drawings, or trenching or excavating for placement of any pipe or structures, to determine actual elevations. New pipelines shall be laid to such grade as to clear all existing facilities which are to remain in service. If the Contractor does not expose all required utilities, the Contractor shall not be entitled to additional compensation for work necessary to avoid interference nor for repair to damaged utilities. Excavations around underground electrical ducts and conduits shall be performed using extreme caution to prevent injury or damage to workmen and to the electrical ducts or conduits.

Contractor shall adequately protect sanitary sewer laterals, water service laterals, and all utilities crossing the proposed construction trench whether they are shown on the plans or not. All cost of potholing shall be considered as included in the unit price of the pipeline, and no additional compensation shall be allowed.

(e). If the Contractor, at any time, encounters subsurface and/or latent conditions at the site materially differing from those shown on the plans or stated in the specifications, the Contractor shall give written notice to the Engineer and the affected utility company, on the same day as discovery of such conditions before they are disturbed. The Engineer will thereupon promptly investigate the conditions, and if conditions are found which materially differ from those shown on the plans or stated in the specifications, the Engineer will at once make such changes in the plans and/or specifications as necessary, and any increase or decrease of cost resulting from such changes will be adjusted in the manner provided in the Section entitled *"Changes in Work"* of these General Conditions. The City will not accept any claim for delay that is not substantiated and documented as required by this Section. The Contractor shall supply to the Engineer a written report detailing the personnel and equipment idled, hours involved and duration of work stoppage. A rate of work production defined as, contractor's estimate of number of days to perform a certain work, shall not be considered as a basis for claims for delays. The City will not consider any claims for work stoppage unless the stoppage had been agreed upon by the City Engineer.

(f). Until instructions are given, any work done by the Contractor that is covered under this Section, either directly or indirectly, after discovery of such error, discrepancy, or conflict, will be at the Contractor's own risk and the Contractor shall bear all costs arising therefrom. The Contractor may continue the work in areas that are not affected.

(g). In addition, pursuant to Public Contract Code, Section 7104, any public works contract which involves digging trenches or other excavations that extend deeper than four feet below the surface shall provide the following:

(1) That Contractor shall promptly, and before the following conditions are disturbed, notify the City, in writing, of any:

a. Material that the Contractor believes may be material that is hazardous waste, as defined in Section 25117 of the Health and Safety Code, that is required to be removed to a Class I, Class II, or Class III disposal site in accordance with provisions of existing law.

b. Subsurface or latent physical conditions at the site differing from those indicated.

c. Unknown physical conditions at the site of any unusual nature, different materially from those ordinarily encountered and generally recognized as inherent in work of the character provided for in the contract.

(2) That the City shall promptly investigate the conditions, and if it finds that the conditions do materially so differ, or do involve hazardous waste, and cause a decrease or increase in the Contractor's cost of, or the time required for, performance of any part of the work shall issue a change order under the procedures described in the contract.

(3) That in the event that a dispute arises between the City and the Contractor whether the conditions materially differ, or involve hazardous waste, or cause a decrease or increase in the Contractor's cost of, or time required for, performance of any part of the work, the Contractor shall not be excused from any scheduled completion date provided for by the contract, but shall proceed with all work to be performed under the contract. The Contractor shall retain any and all rights provided either by contract or by law which pertain to the resolution of disputes and protests between the contracting parties.

(h). No excavation exceeding 6" in depth below existing grade shall be performed except by hand operated tools until the location and alignment vertical and horizontal of all high risk facilities, if any, within 100 feet of proposed work have been field identified.

(1) High risk facilities include but are not limited to the following:

a. Pipelines greater than 6" in diameter or pipelines operating at pressure greater than 60 PSIG conducting natural gas, petroleum products or other toxic or flammable gas or liquid, and

b. Electrical underground conductors with a potential to ground of more than 300 volts either directly buried or in duct or conduit and which do not have concentric grounded conductors or other effectively grounded metal shields or sheaths.

c. Fiber optic cables and such other utilities the Engineer may deem as high risk.

(2) All excavation within 2 feet in all directions of high risk facilities shall be carried out by hand tools unless a previous written approval from the Engineer has been obtained.

(3) The minimum spacing between potholing locations along high risk facilities shall depend on the clearance between proposed excavation and high risk facility as follows:

Interval Between Potholing (Feet)	Clearance Between Edge of Proposed Excavation and High Risk Facility
100	> 2'
200	> 8'
300	> 25'
400	> 50'
500	> 100'

(i). No claim of the Contractor under this clause shall be allowed unless the Contractor has given the written notices and reports required as set forth above, provided, however, that the time prescribed therefor may be extended by the City.

30. REMOVAL/RELOCATION OF PUBLIC SERVICE OR OTHER EQUIPMENT OR STRUCTURES

In case it shall be necessary to remove or relocate any telephone, telegraph, or electric power transmission poles, gas pipes, water pipes, electrical conduits, or other underground structures, or any above ground structures, the Contractor shall notify immediately the Engineer, and the affected utility or private owner. Attention is directed to the fact that overhead and underground utilities may cross the work area.

The Contractor's attention is directed to the requirements of Government Code Section 4216 for obtaining an inquiry identification number prior to excavation in any public street or right-of-way.

31. SHUTDOWN/TIE-INS OF EXISTING UTILITIES

Planned shutdowns to portions of existing utilities shall be during periods of minimum use such as nights, weekends, and holidays at no additional cost to the City. The Contractor shall program the work so that service will be restored in the minimum time possible, and shall cooperate with the City in reducing shutdowns to a minimum. No utility interruption will be permitted without the prior written approval of the Engineer.

The Contractor shall make six (6) working days advance written request through the Engineer. The Engineer will verify the necessary shutdown procedures, give required notices, and provide written approval to contractors at least two (2) days before the schedule shutdown date. No work may proceed without Engineer's approval.

City personnel will notify impacted customers at no charge for City-funded projects. City will charge Contractor for this notification on non-City funded projects or developments.

32. CONSTRUCTION SCHEDULE, PROGRESS MEETINGS, COMMENCEMENT OF WORK, AND PERIODIC ESTIMATES

Immediately after execution and delivery of the contract, and before the first partial payment is made, the Contractor shall deliver to the City a construction progress schedule in a form satisfactory to the City, showing the proposed dates of commencement and completion of each of the various subdivisions of work required under the Contract Documents and the anticipated amount of each monthly payment that will become due the Contractor in accordance with the progress schedule. Progress schedules for most City construction projects shall conform to Section 01310, *"Construction Schedule A,"* of the *Standard Specifications*, except when the base bid exceeds $1 million, then progress schedules shall conform to Section 01311, *"Construction Schedule B."*

Every two weeks, the Contractor shall provide a "two-week look-ahead schedule" of work to be performed on each day; any deviation from said schedule must be requested at least two (2) days in advance for approval by the City.

Construction progress meetings shall be held every other week and are mandatory. The contractor's job superintendent or other persons responsible for the timely progress of the work shall be required to attend.

The Contractor shall also furnish on forms to be supplied by the City (a) a detailed estimate giving a complete breakdown of the contract price and (b) periodic itemized estimates of work done for the purpose of making partial payments thereon. The costs employed in making up any of these schedules will be used only for determining the basis of partial payments and will not be considered as fixing a basis for additions to or deductions from the contract price.

The Contractor shall commence work on the project within ten (10) calendar days after receiving the Notice to Proceed from the City. The Contractor shall notify the Engineer at least two (2) work days in advance of the time he intends to start work.

The Contractor shall conduct the work in such a manner and with sufficient materials, equipment, and labor as is considered necessary to insure its completion within the time limits set forth herein. Should the prosecution of the work for any reason be discontinued by the Contractor, with the consent of the Engineer, the Contractor shall notify the Engineer at least twenty-four (24) hours in advance of resuming operations.

33. TIME FOR COMPLETION AND LIQUIDATED DAMAGES

It is hereby understood and mutually agreed, by and between the Contractor and City that the date of beginning and the time for completion as specified in the contract of work to be done hereunder are ESSENTIAL CONDITIONS of this contract; and it is further mutually understood and agreed that the work embraced in this contract shall be commenced on or before the date to be specified in the Notice to Proceed.

The Contractor agrees that said work shall be prosecuted regularly, diligently, and uninterruptedly at such rate of progress as will insure full completion thereof within the time specified. It is expressly understood and agreed, by and between the Contractor and the City that the time for the completion of the work described herein is a reasonable time for the completion of the same, taking into consideration the average climatic range and usual conditions prevailing in this locality.

If the said Contractor shall neglect, fail or refuse to complete the work within the time herein specified, or any proper extension thereof granted by the City then the Contractor does hereby agree, as a part consideration for the awarding of this contract, to pay to the City the amount specified in the contract, not as a penalty but as liquidated damages for such breach of contract as hereinafter set forth, for each and every day that the Contractor shall be in default after the time stipulated in the contract for completing the work. Liquidated damages as included in this agreement are authorized by California Government Code Section 53069.85, and shall not exceed those standards as set by statute. Liquidated damages will also be assumed by any surety on a performance bond where the Contractor would have been liable for liquidated damages under the agreement.

The said amount is fixed and agreed upon by and between the Contractor and the City because of the impracticability and extreme difficulty of fixing and ascertaining the actual damages the City would in such event sustain, and said amount is agreed to be the amount of damages which the City would sustain and said amount shall be retained from time to time by the City from current periodical estimates.

It is further agreed that time is of the essence on each and every portion of this contract and the specifications wherein a definite and certain length of time is fixed for the performance of any act whatsoever; and where under the contract an additional time is allowed for the completion of any work, the new time limit fixed by such extension shall be of the essence to this contract. Provided, that the Contractor shall not be charged with liquidated damages or any excess cost when the City determines that the Contractor is without fault and the Contractor's reasons for the time extension are acceptable to the City; Provided further, that the Contractor shall not be charged with liquidated damages or any excess cost when the delay in completion of the work is due:

(a) To any preference, priority, or allocation order duly issued by the federal, state, regional, or local governmental agency;

(b) To unforeseeable cause beyond the control and without the fault or negligence of the Contractor, including catastrophic events, fires, floods, epidemics, quarantine restrictions, strikes, freight embargoes, and severe weather;

When the contract completion time is specified in Calendar days, or by a date specific, it shall be deemed to include delays due to normal rain or inclement weather and no time extension may be approved therefor; and

(c) To any delays of subcontractors or suppliers occasioned by any of the causes specified in subsections (a) and (b) of this Section; Provided further, that the Contractor shall, within ten (10) calendar days from the beginning of such delay, unless the City shall grant a further period of time prior to the date of final settlement of the contract, notify the City, in writing, of the cause of delay, who shall ascertain the facts and extent of the delay and notify the Contractor within a reasonable time of its decision in the matter.

The failure to so notify City shall constitute a waiver thereof, provided that in case of a continuing cause of delay only one (1) claim shall be necessary.

A request for an extension of time or the granting of an extension of time shall not constitute the sole basis for any claim against the City for additional compensation.
In the instance where a time extension has been granted for a delay deemed by the City to be its responsibility, and where that delay is considered to be unreasonable under the circumstances and not within the contemplation of either the City or the Contractor, the extension of time shall not be construed to preclude the recovery of damages by the Contractor pursuant to Section 7102 of the Public Contract Code.

For each and every working day that the work remains unfinished after the time limit designated in the Notice Inviting Bids, and any extensions of time granted under this Section, the sum set forth in the Special Provisions shall be paid by the Contractor to the City, or may be deducted by the City from any monies due the Contractor.

Liquidated damages of specified amount per calendar day may be assessed for each designated activity not completed within the specified time limits. Such activities include, but are not limited to the following:

(1) All contract activities comprising total contract work except certain minor corrective work not affecting the full use of the work completed.

(2) When "NO PARKING" signs are posted on a street block without any work being in progress within the indicated time. "NO PARKING" signs shall not be placed on any street block where continuous construction activity is not to take place during the hours of indicated no-parking restriction.

(3) For each street segment on which work proceeds beyond a continuous period of 14 calendar days.

(4) For each day of unauthorized access disruption.

(5) For each day of unauthorized interruption of the traffic signal operations.

(6) For each day of unauthorized interruption of the street light operations.

34. CONTRACTOR STORAGE AREA

The Contractor shall be responsible for making provisions to obtain a job trailer and/or storage area and shall make arrangements for any utility services required. No material or rubber tired equipment shall be stored within the public street right-of-way, or other City property without written permission. However, "steel track" equipment that is in current, ongoing use may, upon prior written approval, be stored in designated parking lanes along public streets adjacent to work. When no longer in current use, said equipment shall be transported off the public right-of-way.

35. CONTRACTOR'S PARKING

Vehicles owned by contractor's employees shall be parked in a way that will allow City operations to continue unhindered. Contractor shall coordinate with and obtain approval from City prior to any use of City parking areas, driveways, or vehicle accesses.

36. CONSTRUCTION WORK HOURS REGULATIONS

Hours of operation for work under the contract shall be 8:00 a.m. to 5:30 p.m., Monday through Friday. There will be no start-up of machines or equipment, no delivery of materials or equipment, and no cleaning or servicing of machines or equipment prior to 7:30 a.m. or after 6:00 p.m. Additionally, there will be no construction work, deliveries, and servicing of the machines and equipment between 6:00 p.m. and 7:30 a.m. and at any time during Saturdays, Sundays and Legal City Holidays. Exceptions to these time restrictions may be granted by the Engineer for one of the following reasons: (1) inclement weather affecting work, (2) emergency work, or (3) other work, if work and equipment will not create noise or conditions that may be unreasonably offensive to neighbors as to constitute a nuisance. The Engineer must be notified and approval given, in writing, in advance of said work.

More severe or limited working hours may be incorporated into individual projects.

37. CONTRACTOR USE OF PREMISES

(a) During Construction, the Contractor **shall not** have exclusive use of the premises for operations. Existing building tenants and the public shall continue regular daily activities. Work activities must be coordinated to provide for uninterrupted use by the City and the public. Access to the Entry and emergency-exiting routes must at all times be maintained open and obstructed.

(b) Contractor may perform work between the hours of 8:00 AM and 5:00 PM throughout the week, Monday through Friday. Additional compensation for overtime is not a factor of these contract documents. Should after hours or weekend inspection be requested Contractor would be liable for City inspector's overtime charges.

(c) Care shall be taken by the Contractor to reduce dust wherever possible, and clean up of the areas shall be made on a continuous basis. Exterior dirt, dust debris, building materials etc. shall be cleaned up daily at a minimum.

38. OVERTIME REQUIREMENTS

The Contractor shall forfeit, as a penalty to the City, twenty-five dollars ($25.00) for each worker employed in the execution of the contract by the Contractor, or any subcontractor, for each calendar day during which such worker is required or permitted to work more than eight (8) hours in any one (1) calendar day and forty (40) hours in any one (1) calendar week, in violation of the provisions of the Labor Code, and in particular, Section 1810 to Section 1815 thereof, inclusive, except that work performed by employees of Contractors in excess of eight (8) hours a day and forty (40) hours during one (1) week, shall be permitted upon compensation for all hours worked in excess of eight (8) hours per day, at not less than one and one half (1.5) times the basic rate of pay as provided for in Section 1815.

39. SAFETY AND HEALTH REGULATIONS FOR CONSTRUCTION

In order to protect the lives and health of the Contractor's employees under the contract, the Contractor shall comply with all pertinent provisions of applicable Federal, State and local laws; and shall maintain accurate record of all cases of death, occupational disease, and injury requiring medical attention or causing loss of time from work, arising out of and in the course of employment on work under the contract.

In addition to any Federal, State or local requirements mandated by law, the Contractor shall conform with all applicable requirements and procedures specified in the current edition of the *"City of Daly City Contractor Safety Requirements"*. A copy of this document will be made available to the Contractor either with the Notice to Proceed or at the preconstruction conference.

In any case Contractor alone shall be responsible for the safety, efficiency, and adequacy of the Contractor's plant, appliances, and methods, and for any damage which may result from their failure or their improper construction, maintenance, or operation.

40. HAZARDOUS MATERIALS AND WORKER SAFETY

(a). Contractor shall neither waste nor deposit on this project any hazardous materials, including but not limited to asbestos. Hazardous material spills that occur as a result of either equipment failures or vandalism, including adjacent contaminated soils, shall be removed and transported to an environmentally approved disposal site. All removal and transportation costs shall be the responsibility of the Contractor.

(b) Contractor shall furnish the City Engineer the following as applicable:

(1) List of hazardous substances to be used, and copies of Material Safety Data Sheets (MSDS) for each listed item.

(2) Description of where, when and how the material will be used on site.

(3) Description of methods and equipment to be employed to safeguard the public and City and Contractor's employees.

(4) Specific contacts for questions on MSDS.

(c) Contractor shall post in a conspicuous area at his field office the following:

(1) Emergency telephone numbers 911 and 991-8092. Emergency and paramedic ambulance service number 991-6455 for Seton Medical Center.

(2) Log of project accidents.

(3) MSDS for all hazardous materials at the construction site.

(d) Contractor shall have at least one employee trained on confined space entry regulations at the site whenever there are open trenches or underground work going on.

(e) Job site shall be kept orderly, clean and free of dust and debris. Dust and moisture shall be prevented from entering the areas adjacent to construction areas.

41. MATERIALS, SERVICES AND FACILITIES

It is understood that, except as otherwise specifically stated in the contract documents, the Contractor shall provide and pay for all materials, labor, tool, equipment, water, light, power, transportation, superintendence, temporary construction of every nature, and all other services and facilities of every nature whatsoever necessary to execute, complete, and deliver the work within the specified time.

Any work necessary to be performed after regular hours, on Saturdays, Sundays or Legal Holidays, shall be performed without additional expense to the City.

All equipment, materials and supplies called for by the plans and specifications shall be new unless otherwise specified.

42. CONTRACTOR'S TITLE TO MATERIAL

No materials or supplies for the work shall be purchased by the Contractor or by any subcontractor subject to any chattel mortgage or under a conditional sale contract or other agreement by which an interest is retained by the seller. The Contractor warrants that Contractor holds good title to all materials and supplies used in the work, free from all liens, claims or encumbrances.

43. INSPECTION AND TESTING OF MATERIALS

All materials and equipment used in the construction of the project shall be subject to adequate inspection and testing in accordance with accepted standards. The laboratory or inspection agency shall be selected by the City. The City will pay for all laboratory inspection service direct, and not as a part of the contract.

Materials of construction, particularly those upon which the strength and durability of the structure may depend, shall be subject to inspection and testing to establish conformance with specifications and suitability for users intended.

In the event any materials, equipment or work are required by law, ordinance or regulation of any public authority, or by the specifications or otherwise, to be specifically tested or approved, the Contractor shall give the Engineer timely notice of its readiness for inspection or test, and of the date set for such if the inspection is to be made by other than the Engineer.

Inspection or tests of materials shall be made where practicable at the source of supply, and the Contractor shall furnish the Engineer certified copies, in triplicate, of all factory and mill test reports. Any materials shipped by the Contractor from a factory or mill prior to having satisfactorily passed such testing and inspection by a representative of the City shall not be incorporated in the work, unless the Engineer has notified the Contractor in writing that such testing and inspection will not be required.

44. "OR EQUAL" CLAUSE

Whenever a material, article or piece of equipment is identified on the plans or in the specifications by reference to manufacturers' or vendors' names, trade names, catalogue numbers, etc., it is intended merely to establish a

standard; and, any material, article or equipment of other manufacturers and vendors which will perform adequately the duties imposed by the general design will be considered equally acceptable provided the material, article, or equipment so proposed is, in the opinion of the Engineer, of equal substance and function. It shall not be purchased or installed by the Contractor without the Engineer's written approval.

Substantiating data supporting the request for substitute of an "equal item" must be submitted thirty-five (35) calendar days following the contract award. If, in the judgment of the Engineer, the proposed substitute does not equal the material, process or article specified, the Contractor shall furnish the material, process or article as specified. Equipment, materials, and supplies described in words which have a well-known technical or trade meaning shall refer to such recognized standards.

Proposed alternate equipment, materials and methods, not otherwise set forth in the plans and specifications, must be submitted for approval by the Engineer at least one (1) week prior to the opening of bids. Failure to comply with this provision will automatically disqualify such alternate substitutions.

All Federal and State laws and regulations now imposed by competent authority and relating to any materials required to be furnished under the specifications are hereby made controlling and a part of the specifications.

45. PATENTS, LICENSES AND ROYALTY FEES

The Contractor shall hold and save the City its subsidiary agencies and their officers, agents, and employees harmless from liability of any nature or kind, including cost and expenses for, or on account of, any patented or unpatented invention, process, article, or appliance manufactured or used in the performance of the contract, including its use by the City, unless otherwise specifically stipulated in the contract documents.
If the Contractor uses any design, device or materials covered by letters, patent or copyright, the Contractor shall provide for such use by suitable agreement with the City of such patented or copyrighted design, device or material. It is mutually agreed and understood that, without exception, the contract prices shall include all royalties or costs arising from the use of such design, device or materials, in any way involved in the work. The Contractor and/or Contractor's Sureties shall indemnify and save harmless the City of the project from any and all claims for infringement by reason of the use of such patented or copyrighted design, device or materials or any trademark or copyright in connection with work agreed to be performed under this contract, and shall indemnify the City, its subsidiary agencies, and their officers, agents, and employees for any cost, expense or damage which it may be obliged to pay by reason of such infringement at any time during the prosecution of the work or after completion of the work.

46. WEATHER CONDITIONS

In the event of temporary suspension of work, or during inclement weather, or whenever the Engineer shall direct, the Contractor will, and will cause the Contractor's subcontractors to protect carefully their work and materials against damage or injury from the weather. If, in the opinion of the Engineer, any work or materials shall have been damaged or injured by reason of failure on the part of the Contractor or any of his subcontractors to so protect the Contract work, such materials shall be removed and replaced at the expense of the Contractor.

The Contractor will be granted a non-compensable time extension for weather-caused delays over and above what would be expected in an average year. The determination to grant a non-compensable weather-related delay will be at the sole discretion of the Engineer. Extensions of time for adverse weather will not be granted in any case unless the Contractor establishes, to the satisfaction of the Engineer, that such adverse weather was:

(a) responsible for the delay of the completion of the work as whole, and

(b) was more severe than the average climatic range and usual weather conditions prevailing at the locality of the site over the entire Contract time period.

Pursuant to Public Contract Code Section 7104 Contractor shall not be responsible for the cost of repairing or restoring damage to the work, which damage is determined to have been proximately caused by an act of God, in excess of 5 percent of the contracted amount, provided, that the work damaged is built in accordance with accepted and applicable building standards and the plans and specifications of the awarding authority.

47. PROTECTION OF WORK AND PROPERTY - EMERGENCY

A. General:

The Contractor shall at all times safely guard the public and City property from injury or loss in connection with this contract, and shall at all times safely guard and protect the Contractor's own work, and that of adjacent property from damage. The Contractor shall replace or make good any such damage, loss or injury whether by vandalism or any other cause.

In case of emergency which threatens loss or injury of property and/or safety of life, the Contractor will be allowed to act, without previous instructions from the Engineer, in a diligent manner. The Contractor shall notify the Engineer immediately thereafter. Any claim for compensation by the Contractor due to such extra work shall be promptly (on the same day) submitted to the Engineer for approval.

When the Contractor has not taken action but has notified the Engineer of an emergency threatening injury to persons or damage to the work or any adjoining property, the Contractor shall act as instructed or authorized by the Engineer.

The amount of reimbursement claimed by the Contractor on account of any emergency action shall be determined in the manner provided in Section 66 of the General Conditions.

B. Special Protection – Existing High-Voltage Series Circuit Street Lighting:

In various City areas existing underground conduit provides service for high-voltage series street lighting. Damage to such conduit and wiring can result in extremely high financial liability for the damaging agency or contractor. Prior to initiating construction, the location of any such circuitry shall be verified. During construction extra caution shall be taken to protect the existing high voltage street light conduit in the project area. In addition to any locations of street light circuits provided by USA, the agency or contractor shall employ a utility locating service to mark the alignment of such circuits within the entire project area. Contractor shall positively locate street light conduit by hand digging in areas where the new main or new services will cross the street light circuit. Conduit is typically 2" diameter asbestos-cement transite conduit and may be encased in concrete. Agency or contractor shall give 24 hour notice prior to excavating near street light conduits. Agency or contractor must be present at the time of excavation. Conduit across trenches shall be supported as required. If conduit is damaged the agency or contractor shall immediately notify the Engineer. The agency or contractor shall be responsible for making immediate repairs at their expense. Failure to proceed with repairs within 60 minutes of causing damage to the street light circuit shall result in the City arranging for repairs to be made and charging the agency or contractor for all expenses associated with the repairs. Note: The conductor cannot be spliced. Pulling new conductors between street lights may require the temporary removal of the adjacent street light poles to allow direct access to the conduit risers.

48. USE OF PREMISES, PRESERVATION OF PROPERTY AND DAMAGES

The Contractor expressly undertakes at the Contractor's own expense:

(a) To take every precaution against injuries to persons or damage to property.

(b) To store apparatus, materials, supplies and equipment in such orderly fashion at the site of the work as will not unduly interfere with the progress of work or the work of any other contractor.

(c) To place upon the work or any part thereof only such loads as are consistent with the safety of that portion of the work.

(d) Cleaning of all affected streets and sidewalks. In addition clean up shall include all refuse, rubbish, scrap materials, and debris caused by the Contractor's operations, to insure that at all times the site of the work shall present a neat and orderly appearance. As a minimum, said cleanup operations shall be performed at the end of each work day; and more frequently shall be performed as required by contract operations and/or as directed by the Engineer.

(e) To effect all cutting, fitting or patching of work required to make the same to conform to the plans and specifications and, except with the consent of the Engineer, not to cut or otherwise alter the work of any other Contractor.

(f) To furnish watchpersons as required to protect the work on the project. The Contractor is responsible for the safety of the work on the project and shall, at the Contractor's own expense, repair all damage done to the work before final acceptance.

(g) All costs associated with required repair or replacements to damage caused by Contractor operations.

(h) To continually maintain adequate protection of all of Contractor's work and materials from damage, destruction or loss and shall protect the City's property from injury or damage arising in connection with this contract.

The Contractor shall repair damage, replace damaged items, and restore all removed or damaged existing improvements occurring from the Contractor's operations to pursue completion of the contract. The repairs and replacement shall be to the satisfaction of the Engineer and according to City standards and practices. The minimum repair or replacement shall be equal to surrounding existing conditions, or better, and the Engineer's decision as to acceptable repair or replacement shall be final. The burden of proof as to whether there was existing damage or new damage by the Contractor shall rest with the Contractor. This is a non-payment item.

(i) To exercise care to avoid damage to existing improvements or facilities, utilities, and adjacent property, that are not to be removed or disturbed.

If such objects are damaged by reason of the Contractor's operations, they shall be replaced or restored at the Contractor's expense. The minimum repair or replacement shall be final. The burden of proof as to whether there was existing damage or new damage by the Contractor shall rest with the Contractor.

(j) To hereby assume all risk and damage to the Contractor's work and materials from fire, earthquakes, storm, vandalism, and/or other causes prior to the completion and acceptance of the work and shall, at the Contractor's own cost and expense, repair and/or replace any work or materials damaged or destroyed.

49. CONTINUOUS USE OF EXISTING BUILDING

Should the contractor, after the contract time has elapsed, request a shutdown of the existing building prior to securing a Temporary Certificate of Occupancy for the new building, contractor shall reimburse the City for the City's costs and for any loss of event rental income as may be deemed applicable.

50. MAINTAINING PUBLIC AND TRAFFIC SAFETY

The Contractor shall so conduct operations as to offer the least possible obstruction and inconvenience to the public and abutting property owners, and he shall have under construction, no greater length or amount of work than can be prosecuted properly with due regard to the rights of the public.

The fire department shall be notified a minimum of 48 hours prior to any proposed street closure or water shutdown or other needed utility interference. Date, time, location, and estimated time of closure shall be provided. In addition, this information shall be confirmed on the day of closure, prior to such closure.

No material or equipment shall be stored where it will interfere with the free and safe passage of public traffic. All public traffic shall be permitted to pass through the work with as little inconvenience and delay as possible.

Whenever the Contractor's operations create a condition hazardous to traffic or to the public, the Contractor shall furnish, erect, and maintain, at the Contractor's expense and without cost to the City, fences, barricades, lights, signs, and other devices as are necessary to prevent accidents or damage or injury to the public.

Should the Contractor appear to be neglectful or negligent in furnishing warning and protective measures as above provided, the Engineer may direct attention to the possible existence of a hazard and the necessary warning and protective measures shall be furnished and installed by the Contractor at the Contractor's expense. Should the Engineer point out the inadequacy of warning and protective measures, such action on the part of the Engineer shall not relieve the Contractor from responsibility for public safety or abrogate obligation to furnish and pay for these devices.

Should the contractor fail to provide protective work, materials or measures in a satisfactory and timely manner, the City shall have the right to have said work, materials or measures performed by others. Contractor shall be liable for all associated costs including ancillary costs incurred by City personnel in effecting, administering or inspecting the required works.

51. HAULING

Hauling of any earth, sand, gravel, or waste materials, including excess excavated materials, rock, trash and debris, over any public street, alley, or other public place, requires prior approval of the City Engineer and an acceptable haul route is required.

52. MAINTAINING ACCESS

The Contractor shall maintain all existing pedestrian walkways and crosswalks through the project limits, or provide acceptable temporary access to the facilities through the construction zones. The location and details for such temporary walkways shall be submitted to the Engineer for approval.

The Contractor shall maintain pedestrian and vehicular access to all portions of the property. In the event an area must be closed temporarily, the Contractor shall obtain the Engineer's written approval at least 72 hours in advance. Minimum information required for City approval is the exact location, date and time of closure, time of start and finish and alternate access route or detour.

Liquidated damages may be assessed for failure to maintain access.

Full compensation for provision of access facilities and for maintaining access will be considered as included in the payment for the various Contract Bid Items, and no separate payment will be made therefore.

53. *"NO PARKING"* IN CONSTRUCTION ZONES

The Contractor shall so conduct his operations as to offer the least possible obstruction and inconvenience to the public and abutting property owners.

The placement of "NO PARKING" signs shall be governed by the following rules and regulations:

- "No Parking" signs shall be furnished and approved by the City.
- The signs shall indicate the Day, Date and Time the "No Parking" restriction shall be effective. Information shall be written by the contractor in water proof ink and shall be clearly legible.
- Parking restrictions shall be allowed only between the hours of 8:00 am and 5:00 pm, or as stipulated in writing by the City.
- The signs shall be stapled on both sides of barricades and a minimum of three (3) barricades shall be placed on the side of the street where the restriction is required. The signs shall be placed at a maximum spacing of 100', or as required by the City.
- The signs shall be in place at least 48 hours in advance of work that requires no parking and shall remain in place while the construction activity requiring parking prohibition is in progress.

"No Parking" restriction signs shall be removed from areas where not warranted. The Contractor may be required to pay liquidated damages at the rate specified in the Special Provisions if the Contractor fails to perform any work justifying the posting of *"NO PARKING"* signs on each and every day the signs prohibit parking.

Should Contractor reschedule or delay scheduled work, Contractor shall be responsible for all notifications of all affected homeowners, immediately upon decision to reschedule or delay operations. Contractor shall not begin any rescheduled or delayed operations until forty-eight (48) hours after notification.

Traffic control shall be in accordance with the California Department of Transportation Traffic Manual.
In addition to providing signs, warning lights, reflectors, barriers, and other necessary safety devices and measures, the Contractor shall provide sufficient flaggers to direct vehicular traffic through the construction areas when construction limits the roadway to one lane of vehicular traffic.

No material or equipment shall be stored where it will interfere with the free and safe passage of public traffic, and at the end of each day's work, and at other times when construction operations are suspended for any reason, the Contractor shall remove all equipment and other obstructions from that portion of the roadway open for use by public traffic.

Should the Contractor appear to be neglectful or negligent in furnishing warning and protective measures, as above provided, the Engineer may direct attention to the existence of a hazard, and the necessary warning and protective measures shall be furnished and installed by the Contractor at his expense.

54. CLEANUP AND REMOVAL OF DEBRIS

The Contractor shall remove all obstructions which interfere with the completion of the work. The cost of removing these obstructions shall be included as a part of each individual intersection bid item for their removal. These obstructions may be guardrails, spillway assemblies, etc.

Those guardrails, barricades, street signs, roadway landscaping, etc., which are required to complete work shall be replaced, or as directed by the Engineer. All remaining guardrails, barricades, street signs, etc., which in the judgment of the Engineers are of value but are not required to be replaced, shall be carefully cleaned and stockpiled at locations designed by the engineer. Items which have no value to the City shall be disposed of by the Contractor as provided in Section 7-1.13, *"Disposal of Material Outside the Highway Right-of-Way,"* of the *State Specifications*.

When fences within the right of way are designated on the plans to be removed, the Contractor shall carefully remove and stockpile them on the adjacent property. The cost of removing and stockpiling those fences, which are to remain the property of the property owners, shall be included in this item.

Fences, walls, and any other structures which are not designated to be removed shall be left in place. Any damage to these shall be repaired by the Contractor entirely at his expense to the lines and grades designated by the Engineer.

Before final payment, to remove all surplus material, falsework, temporary structures, including foundations thereof, plant of any description and debris of every nature resulting from Contractor's operations, and to dispense of same outside the project area in a lawful manner to the satisfaction of the Engineer, unless otherwise specified, with the result that the site is left in a neat, orderly condition.

55. HOLD HARMLESS

The Contractor and sureties shall indemnify and hold harmless the City, its subsidiary districts, the Agency and their officers, officials, employees, volunteers and agents from all claims, suits, or actions of every name, kind, and description, including attorney's fees, based on negligence or willful misconduct, brought for, or on account of, injuries to or death of any person or persons or damage to property resulting from the performance of any work by the Contractor or the Contractor's employees or subcontractors and their employees and suppliers required by this contract or by the City, its subsidiary agencies, their officers, officials, employees, volunteers, and agents.

Further, the Contractor and sureties shall indemnify and hold harmless the City, its subsidiary districts, the Agency, and their officers, officials, employees, volunteers and agents from all claims suits, or actions of every name, kind, and description by, or in consequence of, neglect in safeguarding the work on the project, or, by or account of, any claims or amount recovered by an infringement of patent, trademark, or copyright, or from any claim or amount arising or recovered under the Workers' Compensation Law, or any other law, ordinance, order or decree, and so much of the money due Contractor under the contract, as shall be considered necessary by the City, may be retained, or in case no money is due, the Contractor's sureties shall be held until any damages shall have been settled and satisfactory evidence to that effect furnished to the City.

The duty of the Contractor to indemnify and hold harmless, as set forth in this section, shall include the duty to defend as set forth in Section 2778 of the California Civil Code, provided, however, that nothing herein shall be construed to require the Contractor to indemnify the City, its subsidiary districts, the Agency and their officers, agents, employees, and servants against any responsibility to liability in contravention of Section 2782 of the California Civil Code.

56. CONTRACTOR'S AND SUBCONTRACTOR'S INSURANCE

The Contractor shall not commence work under the contract until all insurance required under this Section has been obtained, including certificates of insurance evidencing the required coverage, and such insurance has been approved by the City. The Contractor shall not allow any subcontractor to commence work on a subcontract until all similar insurance required of the subcontractor has been so obtained and approved.

Nothing contained in these insurance requirements is to be construed as limiting the extent of the Contractor's responsibility for payment of damages resulting from the Contractor's operations under this Contract. Coverage required hereunder shall operate as Primary insurance.

(a) Workers' Compensation and Employers' Liability Insurance:

(1) The Contractor shall take out and maintain during the life of the contract, Workers' Compensation and Employers' Liability Insurance providing full Statutory Coverage for all of Contractor's employees employed in connection with the work, and, in case any work is sublet, the Contractor shall require the subcontractor similarly to provide Workers' Compensation Insurance for all of the latter's employees unless such employees are covered by the protection afforded by the Contractor. In case any class of employee engaged in hazardous work under the Contract is not protected under the Workers' Compensation Statute, the Contractor shall provide and shall cause each subcontractor to provide appropriate insurance for the protection of his employees not otherwise protected and to provide written evidence of such insurance to the City of Daly City.

The required insurance shall cover any assignee of the Contractor or any subcontractor performing or causing to be performed any work or labor in fulfillment of the provisions of the contract. The insurance shall be taken out with a responsible insurance carrier authorized under the laws of the State of California and satisfactory to the City and with not less than $1,000,000 Employers' Liability Protection.

Confirmation that Worker's Compensation and Employers' Liability Insurance is present, pursuant to the Contract, shall be provided by a separate endorsement to the Certificate of Insurance.

In signing the contract, the Contractor makes the following certification, required by Section 1861 of the California Labor Code:

"I am aware of the provisions of Section 3700 of the California Labor Code which require every employer to be insured against liability for Worker's Compensation or to undertake self-insurance in accordance with the provisions of the code, and I will comply with such provisions before commencing the performance of the work of this Agreement."

(2) In the alternative, Contractor may rely on a self-insurance program to meet these requirements so long as the program of self-insurance complies fully with the provisions of the California Labor Code, and is authorized as a legally sufficient self-insurance program by the State of California. In such case, excess Worker's Compensation Insurance with limits of not less than five million dollars ($5,000,000) shall be maintained.

(3) The insurer, if insurance is provided, and the Contractor, if a program of self-insurance is provided, shall waive all rights of subrogation against the City of Daly City for loss arising from worker injuries sustained under this agreement.

(b) General Liability and Property Damage Insurance:

The Contractor shall take out and maintain during the life of the Contract such general liability and property damage insurance as shall protect the Contractor and any subcontractor performing work covered by the Contract, for claims, whether by the City, its subsidiary districts, the Agency, their employees, or by others for damages for personal injury, death, or to property, which may arise from the Contractor's operations under the Contract, whether such operations be by the Contractor or by any subcontractor or by anyone directly or indirectly employed by either of them and the amounts of such insurance shall be as follows:

(1) General Liability Insurance: Contractor, at Contractor's own cost and expense, shall maintain Commercial General Liability insurance for the period covered by this agreement in an amount not less than one million dollars ($1,000,000) combined single limit coverage for risks associated with the work contemplated by this agreement. If a Commercial General Liability Insurance form or other form with a general aggregate limit is used, either the general aggregate limit shall apply separately to the work to be performed under this agreement or the general aggregate limit shall be at least two million dollars ($2,000,000). Such coverage shall include but shall not be limited to, protection against claims arising from bodily and personal injury, including death resulting therefrom.

(2) Property damage Insurance: Contractor, also at Contractor's own cost and expense, shall maintain Property Damage Insurance in an amount not less than five hundred thousand dollars ($500,000) on account of one accident or incident, in the form commonly known as "broad form property damage coverage". A deductible that does not exceed $5,000 may be provided.

Each of the following shall be included in the insurance coverage or added as an endorsement to the policy(ies):

a. The City of Daly City, its subsidiary districts, the Agency and their officers, officials, employees, volunteers and agents are to be covered as insureds as respects each of the following: Liability arising out of activities performed by or on behalf of Contractor, including the insured's general supervision of Contractor; products and completed operations of Contractor; premises owned, occupied or used by Contractor; or automobiles owned, leased, hired, or borrowed by Contractor, The coverage shall contain no special limitations on the scope of protection afforded to Daly City, its subsidiary districts, the Agency and their officers, officials, employees, volunteers and agents..

b. The insurance policy form shall provide coverage on an occurrence basis, and not on the basis of claims made.

c. The insurance must cover complete contractual liability. This may be provided by amending the definition of "incidental contract" to include any written agreement. Separate endorsement is required if the contractual liability coverage is not included within the general liability coverage. There shall also be an endorsement that shall specify or be endorsed to provide that thirty (30) days notice must be given, in writing, to the Engineer of any pending cancellation of the contractual liability coverage.

d. Any explosion, collapse, and underground property damage exclusion must be deleted.

e. An endorsement must state that coverage is primary insurance and that no other insurance or self-insured retention carried by the City of Daly City, its subsidiary districts, or the Agency will be called upon to contribute to a loss under the coverage.

f. The policy must contain a cross liability or severability of interests clause.

g. Any failure of Contractor to comply with reporting provisions of the policy shall not affect coverage provided to City of Daly City, its subsidiary districts, the Agency and their officers, officials, employees, volunteers and agents.

h. Insurance is to be placed with California-admitted insurers, and carrier(s) must be rated "A" or above in the *Best's Rating Guide*. The City reserves the right to accept or deny use of any particular carrier.

i. Notice of cancellation or non-renewal must be received by the City Engineer's office at least thirty (30) days prior to such change. The Cancellation Clause on the Certificate of Insurance needs to cross-out "endeavor to" and "but failure to mail such notice shall impose no obligation or liability of any kind upon the company, its agents or representatives."

j. Liability for Medical Expenses is required to cover up to $10,000 for any one person.

k. Contractor is to include all subcontractors as insureds under its policies, or provide the City with certifications and endorsements for each subcontractor, with all coverage stated above applying as well.

l. Products and Completed Operations (Products-Comp/Op Agg) should cover up to $1,000,000, covering bodily injury and property damage for injuries for defective construction or installation after completion of the construction contract.

m. Excess liability, if used to meet required coverage, must be of the umbrella form.

n. Any exceptions to the above requirements, limits or conditions are to be made upon the sole and exclusive discretion of the City of Daly City, by and through the City's Risk Manager.

(c) Automobile Public Liability and Property Damage Insurance:

If and whenever the Contractor or any subcontractor, in carrying on the contract operation, shall use and operate automobiles, trucks or other vehicles on public streets and highways, each shall carry, at his own expense, automobile public liability and property damage insurance, with limits of not less than five hundred thousand dollars ($500,000) for any one person, and one million dollars ($1,000,000) for any one (1) accident, and three hundred thousand dollars ($300,000) property damage, or one million dollars ($1,000,000) combined single limit.

The term *"public streets and highways"* shall be deemed to include without limiting the generality thereof, all roads, roadways, and thoroughfares used for access to the site of the work.

Automobile Liability and Property Damage Insurance needs to cover *"Any Auto"* or the combination of *"All owned Autos"*, *"Hired Autos"* and *"Non-owned Autos"*.

(d) Additional Insureds:

All policies of insurance, for coverage required under subsections (b) and (c) above, shall name the City of Daly City, its subsidiary agencies as identified by City, their officers, officials, employees, volunteers and agents as additional insureds.

Policies shall provide coverage to each of the insureds with respect to said work. Both bodily injury and property damage insurance must be on an occurrence basis, and said policy shall provide that the coverage afforded thereby shall be primary coverage to the full limit of liability stated in the declarations, and if the additional insureds have other insurance against the loss covered by said policy, that other insurance shall be excess insurance only.

Additional Insureds and Primary Coverage shall be confirmed by a separate endorsement to the Certificate of Insurance and shall be filed with the Engineer.

(e) *"Act-of-God"* Insurance:

The Contractor shall, if Bid Item for *"Act of God"* Insurance is awarded, obtain and maintain throughout the construction and guarantee periods, insurance, payable to the City to cover damage in excess of five percent (5%) of contract amount to facilities constructed under this contract caused by an *"Act of God"* as defined in the Public Contract Code Section 7105. A separate Bid Item is provided for this insurance premium when required. The amount of insurance shall be the full project cost, but shall not limit the Contractor's insurance coverage otherwise required herein. If *"Act of God"* Insurance is not awarded, the Contractor will not be responsible for *"Act of God"* coverage but all other requirements of insurance will apply.

(f) Builder's Risk Insurance.

The Contractor shall, if Bid Item for *"All Risk"* Builders Risk Insurance is awarded, obtain, pay for, and maintain this insurance which shall cover, but shall not be limited to, fire, lightning, windstorm, hail, explosion, riot, riot attending a strike, civil commotion, smoke damage, damage by aircraft or vehicles, vandalism and malicious mischief, theft, collapse, flood, and earthquake. This insurance shall name the City, the Engineer, and the Contractor as insureds and shall include coverage, but not by way of limitation, for all damage or loss to the work and to appurtenances, to materials and equipment to be used on the project while the same are in transit, stored on or off the project site, to construction plant and temporary structure. Any additional site improvement costs or security costs required by the Insurer to maintain this coverage shall be the responsibility of the Contractor.

Such insurance may have a deductible clause not to exceed the below-listed limits:

(1) Flood and earthquake deductible shall not exceed two percent (2%) of the amount of loss.

(2) All other perils: Five thousand dollars ($5,000).

(g) Claims for Personal Injury or Property Damage by Reason of Contractor's Operations.

Upon Contractor's receipt of a claim or notice of injury claiming personal injury or property damage by reason of Contractor's operations under the Contract, Contractor shall immediately, but in no event later than five (5) days thereafter:

(1) Notify the claims division of Contractor's liability insurer of the claim or notice presented, informing the insurance carrier of the claimant's name, address and telephone number; and

(2) Inform the claimant of the Contractor's liability insurance carrier on this project, including the insurance company's policy number, local address to where claims may be filed, and telephone number if available.

(3) Contractor shall assist in the prompt investigation of any such claims; and to the extent such liability claims fall within Contractor's deductible (or self-insured retention), Contractor shall comply with Subchapter 7.5 of Title 10 of California Code of Regulations (Unfair Claims Settlement Practices Regulations).

No policy of insurance taken hereunder shall be subject to modification or cancellation except after written notice to the City Attorney, by certified mail, at least thirty (30) days prior to the date of such modifications or cancellation.

No payment will be made to the Contractor unless the provisions of these paragraphs have been complied with.

All policies and certificates shall be submitted for approval within ten (10) calendar days after notification of award of contract.

57. FAITHFUL PERFORMANCE AND PAYMENT (LABOR AND MATERIAL) BONDS

The Contractor simultaneously with execution of the Agreement, shall furnish a surety bond from an admitted surety insurer to secure the faithful performance of the contract for the work in an amount of one hundred percent (100%) of the contract price. The Contractor shall also furnish a bond from an admitted surety insurer to secure payment for all labor, material, equipment, and supplies furnished for the work in an amount equal to one hundred percent (100%) of the contract price.

The form of bond for labor and material shall be such that the City may proceed against the Contractor and the Contractor's sureties on the bonds immediately upon any default in payments for labor, material or supplies without waiting for the completion of the work and the accumulation of damages, and shall be in substantially the form as provided with the project specifications. The premium on all bonds shall be paid by the Contractor and the cost thereof shall be included in the bid prices stated in the proposal.

58. CONSENT OF SURETIES

All alterations, extensions of time, extra and additional work or other changes authorized by these specifications, or any part of the contract, may be made without securing the consent of the surety or sureties on the contract bonds.

59. ENGINEER AUTHORITY

The Engineer shall give all orders and directions contemplated under this contract and specifications relative to the execution of the work. The Engineer shall determine the amount, quality, acceptability, and fitness of the several kinds of work and materials which are to be paid for under this contract and shall decide all questions which may arise in relation to said work and the construction thereof. The Engineer's estimates and decisions shall be final and conclusive, except as herein otherwise expressly provided. In case any question shall arise between the parties hereto relative to said contract or specifications, the determination or decision of the Engineer shall be a condition precedent to the right of the Contractor to receive any money or payment for work under this contract affected in any manner or to any extent by such question.

The Engineer shall decide the meaning and intent of any portion of the specifications and of any plan or drawings where the same may be found obscure or be in dispute. Any differences or conflicts in regard to their work which may arise between the Contractor under this contract and other contractors performing work for the Owner shall be adjusted and determined by the Engineer.

All instructions, rulings and decisions of the Engineer will be made promptly and will be in writing if so requested, and all such instructions, rulings and decisions shall be final and binding unless formal protest is made by the Contractor.

In prosecuting any of the above provisions or in exercising any power or authority granted to the Engineer by the contract, there shall be no liability upon the Engineer or the Engineer's authorized assistants and agents, either personally or as an official of the City and its subsidiary agencies, it being understood that in such matters the Engineer acts as an agent and representative of the City and its subsidiary agencies.

The Contractor shall be aware that all direction, instructions, permission, inspection of work, and approvals would be by the City. Contractor shall transmit all submittals, warranties and bonds, proposals for changes, and pay estimates to City for review and processing. If the specifications indicate Architect, Engineer or Owner direction, instruction, permission, inspection, or approvals, delete the work "Architect", "Engineer" or "Owner" and insert the word "City".

60. PROHIBITED INTERESTS

No official of the City who is authorized in such capacity and on behalf of the City to negotiate, make, accept or approve, or to take part in negotiating, making, accepting, or approving any architectural, engineering, inspection, construction or material supply contract or any subcontract in connection with the construction of the project, shall become directly or indirectly interested personally in this contract or in any part hereof. No officer, employee, architect, attorney, engineer, or inspector of or for the City who is authorized in such capacity and on behalf of the City to exercise any legislative, executive, supervisory or other similar functions in connection with the construction of the project, shall become directly or indirectly interested personally in this contract or in any part thereof, any material supply contract, subcontract, insurance contract, or any other contract pertaining to the project.

61. INSPECTION

The authorized representatives and agents of the City shall be permitted to inspect all work, materials, payrolls, records of personnel, invoices of materials, and other relevant data and records.

Inspectors, employed by the Engineer or by the City, shall be authorized to inspect all work done and all materials furnished. Such inspection may extend to all or any part of the work on the project and to the preparation, fabrication, or manufacture of the materials to be used. An inspector is not authorized to revoke, alter, or waive any requirements of the specifications. The Inspector is authorized to call the attention of the Contractor to any failure of the work or materials to conform to the specifications and contract. The Inspector shall have the authority to reject materials or, in any emergency, suspend the work until any questions at issue can be referred to and decided by the Engineer.

The inspector will in no case act as superintendent or perform other duties for the Contractor, nor interfere with the Contractor's management of the work. Any advice which an inspector may give the Contractor shall in no way be construed as binding to the Engineer or to the City, or as releasing the Contractor from fulfilling all the terms of the Contract.

In case the Contractor refuses to suspend operations on verbal order, the inspector and/or Engineer giving such verbal order will then issue the order in writing to the individual in charge of the work for the Contractor. Any work done after the order to suspend work will not be accepted or paid for by the City.

The Contractor shall furnish the Engineer with every reasonable facility for ascertaining whether or not the work, as performed, is in accordance with the requirements and intent of the specifications and contract. The Contractor shall at all times and for any purpose permit the Engineer and any of the Engineer's representatives and representatives of the City to have safe access to the work and the premises used by the Contractor. The Engineer, Engineer's representatives, and representatives of the City shall at all times have access to all places where machinery or materials are being manufactured, produced or fabricated for use on the work, and shall have full facilities for determining that all such machinery or materials are being made strictly in accordance with the specifications and plans. The Contractor shall, whenever so requested, provide facilities and assistance for weighing or measuring any of the materials.

62. LAND AND RIGHTS-OF-WAY

Prior to the start of construction, the City shall obtain all land rights-of-way necessary for the carrying out and completion of work to be performed under this contract.

If through failure of the City to acquire right-of-way, the Contractor sustains loss which could not have been avoided by the judicious handling of forces, equipment and plant, there will be paid to the Contractor such amount as the Engineer may find to be fair and reasonable compensation for such part of the Contractor's actual loss, as, in the opinion of the Engineer, was unavoidable, determined as follows:

> Compensation for idle time of equipment will be determined in accordance with the rates set forth in the current issue of the Department of Transportation publication entitled *"Labor Surcharge and Equipment Rental Rates"* in effect on the day the Notice Inviting Bids for the work is dated. Refer to Section 8.1.09, *"Right-of-Way Delays,"* of the *State Specifications*.

Actual loss shall be understood to include no items of expense other than idle time of equipment at the rates above provided and necessary payments for idle time of workers, cost of extra moving of equipment, and cost of longer hauls, with no markup in any case for overhead or profit.

If performance of the Contractor's work is delayed as a result of the failure of the City to acquire right-of-way, an extension of time determined pursuant to the provisions of Section 30, *"Time For Completion and Liquidated Damages,"* will be granted. No payment will be made for equipment not on the site of the work.

63. TEMPORARY WORK EASEMENTS

The engineer may obtain temporary easements for use by the contractor. It shall be the responsibility of the Contractor to restore the property to its original condition, acceptable to the Property Owner, at no cost to the City or Property Owner. The Contractor shall stay within the limits of the easement, and should he desire additional space, he shall make such arrangements as are necessary with the Property Owner, and provide the Engineer with a copy of the letter of agreement prior to any trespass.

64. WORK DONE BY OTHERS

The City reserves the right to do other work and to let other contracts for work contiguous to the work set forth in this contract.

In the event work is done by the City or by other contractors contiguous to work covered by this contract, the respective rights of the various interests involved will be established by the Engineer, and the Contractor shall afford the City and other contractors reasonable opportunity for the introduction and storage of their materials and for the execution of their work, and the Contractor shall properly connect and coordinate the Contractor's work with theirs.

If any part of the work under the contract depends for proper execution or results upon any other work, the Contractor shall inspect such work and promptly report to the Engineer any condition which might adversely affect the Contractor's work. The Contractor's failure to so inspect and report shall constitute an acceptance of the other work as fit and proper for the reception of the Contractor's work, except as to deficiencies which may develop in the other work after the execution of the Contractor's work.

65. BENEFICIAL USE

As a condition to partial payments made to the Contractor, the City shall have the right to make beneficial use of completed portions of the work prior to total project completion without prejudice to completion and final acceptance of the total project.

66. PAYMENT TO CONTRACTOR

Not later than the tenth (10th) calendar day of each month, the Contractor shall submit to City an invoice for payment of work completed during the preceding calendar month. The City shall make a Progress Payment to the Contractor on the basis of a duly certified estimate of work performed during the preceding calendar month under the contract. The estimate must be as approved by the City and shall only include materials, equipment, or supplies that have been tested and installed, as per plans. The City shall make said Progress Payment to Contractor not later than the last calendar day of the month in which the Invoice was submitted to City for payment of amount approved by the City. If City fails to make any Progress Payment within thirty (30) days after receipt of an undisputed and properly submitted payment request from Contractor, City shall pay interest to Contractor equivalent to the legal rate set forth in subdivision (a) of Section 685.10 of the Civil Procedures Code. Any payment request determined by City not to be a proper payment request suitable for payment shall be returned to Contractor within seven (7) calendar days after receipt with reasons stated in writing as to why the payment request is not proper as per Section 20104.50 (c)(2) of the Public Contract Code.

The City shall retain ten percent (10%) of such estimated value of the work done, including Contractor's mobilization as part security for the fulfillment of the contract by the Contractor. When the value of project work equals $500,000.00 or more, and at any time after fifty percent (50%) of the work has been completed, the Contractor may make written request to City to reduce the percentage of retention retained by City based on the estimate value of the work done. If the Engineer finds that satisfactory progress is being made, the City may reduce the total amount being retained from payment pursuant to the above requirements to five percent (5%) of the total estimated value of said work and may also reduce the amount retained from any of the remaining partial payments to five percent (5%) of the estimated value of such work. Retention proceeds withheld from any payment by City from the Contract, or by Contractor from any Subcontractor, shall be subject to Section 7107, Subsection (c)(1)(2)(3) of the Public Contract Code, which in part, provides that the retention withheld shall be released within sixty (60) days after the date of completion of the work of improvements. In the event of a dispute between City and Contractor, City may withhold from the final payment an amount not to exceed 150% (one hundred-fifty percent) of the disputed amount. For purposes of this Section, "completion" means any of the following:

- Occupation, beneficial use, and enjoyment of a work of improvement, excluding any operation only for testing, startup, or commissioning, by City, or its agent, accompanied by cessation of labor on the work of improvements.

- Acceptance by City, or its agent, of the work of improvement.

- After commencement of a work of improvement, a cessation of labor on the work of improvement for a continuous period of 100 (one hundred) days or more, due to factors beyond the control of the contractor.

Pursuant to Section 22300 of the Public Contracts Code, at the option of the Contractor, securities may be substituted for the money retained according to the following procedures.

At the request and expense of the Contractor, securities equivalent to the amount withheld shall be deposited with the public agency or with a State or federally chartered bank as the escrow agent who shall pay such monies to the Contractor upon satisfactory completion of the contract. The Contractor shall be the beneficial owner of any securities substituted for monies withheld and shall receive any interest on the monies.

Securities eligible for investment shall include those listed in Section 16430 of the Government Code, or bank or savings and loan certificates of deposit, interest-bearing demand deposit accounts, standby letters of credit, or any other security mutually agreed to by the Contractor and the City. The procedures for handling and the Agreement format providing the required security shall be consistent with those established in Section 10263 of the Public Contract Code.

All material and work covered by partial payments made shall thereupon become the sole property of the City, but this provision shall not be construed as relieving the Contractor from the sole responsibility for the care and protection of materials and work upon which payments have been made or the restoration of any damaged work, or as a waiver of the right of the City to require fulfillment of all the terms of the contract.

The contractor agrees to indemnify and save the City, its subsidiary districts, the Agency, and their officers, agents, employees, and servants harmless from all claims growing out of the lawful demands of the subcontractors, laborers, workers, mechanics, material suppliers, and furnishers of machinery and parts thereof, equipment, power tools, and all supplies, including commissary, incurred in the furtherance of the performance of this contract. The Contractor shall, at the City's request, furnish satisfactory evidence that all obligations of the nature hereinabove designated have to be paid, discharged, or waived. If the Contractor fails to do so, then the City may, after having served written notice on the said Contractor, either pay unpaid bills, of which the City has written notice, direct, or withhold from the Contractor's unpaid compensation a sum of money deemed reasonably sufficient to pay any and all such lawful claims until satisfactory evidence is furnished that all liabilities have been fully discharged whereupon payment to the Contractor shall be resumed, in accordance with the terms of this contract, but in no event shall the provisions of this sentence be construed to impose any obligations upon the City to either the Contractor or the Contractor's Surety.

In paying any unpaid bills of the Contractor, the City shall be deemed the agent of the Contractor, and any payment so made by the City, shall be considered as a payment made under the contract by the City to the Contractor, and the City shall not be liable to the Contractor for any such payment made in good faith.

No payment or partial payment will be made for materials delivered on site, and not installed as per plans.

Whenever the Contractor shall deem all work under the contract to have been completed in accordance therewith, the Contractor shall so notify the Engineer who will promptly ascertain whether such be the fact, and if not will so notify the Contractor in detail of any additional work required. When all the provisions of the contract have been fully complied with to the satisfaction of the Engineer, the Engineer will proceed with all reasonable diligence to measure all work done and all material furnished and will make a final and complete estimate of the value of such work done and materials furnished and will certify to the City Council said estimate and the date of completion of the work. The Council will take prompt action thereon and will furnish the Contractor with a statement of acceptance or of exceptions.

At thirty-five (35) calendar days after the date of filing of notice of final completion of the work, the difference between said final estimate and all payments and accrued interest, if applicable, theretofore made to the Contractor shall be due and payable to the Contractor, excepting only such sum or sums as may lawfully be withheld in accordance with said final estimate shall operate as and shall be a release to the City, its subsidiary agencies their officers, agents, and employees from all claims withheld, and for anything relating to the work or any act or neglect of the City, its subsidiary agencies and their officers, agents, and employees, excepting only claims against the City for any amount withheld by it at the time of such payment.

67. PAYMENT FOR MOBILIZATION

Payments for mobilization shall be considered paid under various bid items, unless the City requires mobilization to be a separately stated bid item, in which case payment for mobilization will be as specified in the Special Provisions/Construction Details and as follows:

(a) When the monthly partial payment estimate of the amount earned, not including the amount earned for mobilization, is five percent (5%) or more of the original contract amount, fifty percent (50%) of the contract item price for mobilization or five percent (5%) of the original contract amount, whichever is the lesser, will be included in said estimate for payment.

(b) When the monthly partial payment estimate of the amount earned, not including the amount earned for mobilization, is ten percent (10%) or more of the original contract amount, the total amount earned for mobilization shall be seventy-five percent (75%) of the contract item price for mobilization or seven and one half percent (7.5%) of the original contract amount, whichever is the lesser, and said amount will be included in said estimate for payment.

(c) When the monthly partial payment estimate of the amount earned, not including the amount earned for mobilization, is twenty percent (20%) or more of the original contract amount, the total amount earned for mobilization shall be ninety-five percent (95%) of the contract item price for mobilization or nine and one half percent (9.5%) of the original contract amount, whichever is the lesser, and said amount will be included in said estimate for payment.

(d) When the monthly partial payment estimate of the amount earned, not including the amount earned for mobilization, is fifty percent (50%) or more of the original contract amount, the total amount earned for mobilization shall be one hundred percent (100%) of the contract item price for mobilization or ten percent (10%) of the original contract amount, whichever is the lesser, and said amount will be included in said estimate for payment. Any remainder will be paid Contractor at close of the job.

The contract price paid for mobilization shall include full compensation for furnishing all labor, materials, tools, and equipment necessary for mobilization as specified herein.

68. WITHHOLDING PAYMENTS

The City may withhold "Plan Approval" or nullify the whole or any part of any partial or final payment to such an extent as may be reasonably necessary to protect it from loss on account of:

(a) Defective work not remedied, irrespective of when any such work be found defective;

(b) Claims or liens filed or reasonable evidence indicating probable filing of claims or liens;

(c) Failure of the Contractor to make payments promptly for labor, materials, equipment, or other facilities, or to subcontractors;

(d) Failure of the Contractor to submit required paperwork in accordance with applicable labor codes and laws;

(e) Failure of Contractor to provide proper payment of wages and fringe benefits;

(f) Failure of Contractor to maintain during the course of the project, a current Daly City Business License whose value is equal to the total accumulated gross receipts for ALL work done in Daly City;

(g) Failure of Contractor to keep *"As-Built"* plans current during course of project;

(h) Failure of Contractor to deliver complete *"As-Built"* plans to Engineer at completion of construction;

(i) Failure of Contractor to provide required *"As-Built"* Grade Certificates to City;

(j) A reasonable doubt that the work can be completed by the City for the balance then unearned by the Contractor in the event the City at that time elects to terminate the contract under, *"Right of the City to Terminate Contract,"* or to take over work under, *"Failure to Complete Work"* as specified elsewhere in this section.

(k) A reasonable doubt that the Contractor will complete the work within the agreed time limits;

(l) Costs to the City resulting from failure of the Contractor to complete the work within the proper time;

(m) Damage to other work or property;

(n) Failure to make proper submissions as herein specified;

(o) Failure to keep work progressing in accordance with schedule, or to maintain or submit *"As-Built"* drawings;

(p) Failure to preserve property and maintain safety during contract work operations;

(q) Any other costs incurred by the City in connection with the project.

Whenever the City, in accordance herewith, withholds any monies otherwise due under the contract, written notice of the amount withheld and the reasons therefor will be given to the Contractor and when the Contractor removes the grounds for such withholdings, the City will promptly pay to the Contractor the amount so withheld.

69. FINAL PAYMENT - EFFECT THEREOF

Payment of the undisputed contract amount is made contingent upon the Contractor furnishing to the City unconditional release of all claims against the City arising by virtue of this contract relating to those amounts. Disputed contract claims in stated amounts may be specifically excluded by Contractor from the operation of the release. No payment, however, final or otherwise, shall operate to release the Contractor or the Contractor's Sureties from any obligation under this contract or the Performance or Payment Bond.

70. SATISFACTION OF LIENS

Prior to judicial determination of any claim or claims or in accordance therewith, the City may apply any amount withheld to the payment and satisfaction of recorded liens or just claims against the Contractor or any subcontractors for labor and services rendered and material furnished. In so doing, the City shall be deemed the agent of the Contractor and any payment so made by the City shall be considered as a payment made under the contract by the City to the Contractor, and the City shall not be liable to the Contractor for any payment made in good faith; provided that such payment will not be made except by court order if the Contractor furnishes a bond satisfactory to the City to indemnify it against any lien or claim.

For timely Stop Notices, City will withhold funds from Contractor's payment in compliance with State Law.

71. PAYMENTS BY CONTRACTOR

The Contractor shall pay:

(a) for all transportation and utility services not later than the twentieth (20th) day of the calendar month following that in which services are rendered,

(b) for all materials, tools, and other expendable equipment to the extent of ninety percent (90%) of the cost thereof, not later than the twentieth (20th) day of the calendar month following that in which such materials, tools, and equipment are delivered at the site of the project, and the balance of the cost thereof not later than the thirtieth (30th) calendar day following the completion of that part of the work in or on which such materials, tools, and equipment are incorporated or used, and

(c) to each of Contractor's subcontractors, not later than the fifth (5th) day following each payment to the Contractor, the respective amounts allowed the Contractor on account of the work performed by Contractor's subcontractors to the extent of each subcontractor's interest therein.

72. RETENTION OF LEGAL RIGHTS

Inspection by the Engineer, or by any of the Engineer's duly authorized representatives, any order, measurement, or certificate by the Engineer, any order by the City for the payment of money, acceptance of any work or any extension of time, or any possession taken by the City shall not operate as a waiver of any provision of the contract, or any power therein reserved to the City, or any right to damages therein provided. Any waiver of any breach of the contract shall not be held to be a waiver of any other or subsequent breach.

The City reserves the right to correct any error that may be discovered in any estimate that may have been paid, and to adjust the same to meet the requirements of the contract and specifications. The City reserves the right to claim and recover by process of law, sums as may be sufficient to correct the error or make good any deficit in the work resulting from such error, dishonesty or collusion discovered in the work after the final payment has been made.

73. QUANTITIES OF ESTIMATE

Whenever the estimated quantities of work to be done and materials to be furnished on a unit price basis under this contract are shown in any of the documents including the proposal, they are given for use in comparing bids, and the right is expressly reserved, except as herein otherwise specifically limited, to increase or diminish them as may be deemed reasonably necessary or desirable by the City to complete the work contemplated by this contract, and such increase or diminution shall in no way vitiate this contract, nor shall any such increase or diminution give cause for claims or liability for damages.

Full compensation shall be considered as included in the prices of the various contract items included in the Bid Schedule, and no additional compensation shall be allowed, for any and all items of work in the drawings and/or specifications for which there is no bid item in the Bid Schedule.

74. CHANGES IN WORK

No changes in the work covered by the approved contract documents shall be made without having prior written approval of the City. Charges or credits for the work covered by the approved change shall be determined by one or more, or a combination of the following methods:

(a) Unit bid prices previously approved.

(b) An agreed lump sum.

(c) Work by Force Account - the actual cost of:

(1) Labor, including foremen;

(2) Materials entering permanently into the work;

(3) The ownership of rental cost of construction plant and equipment during the time of use on the extra work;

(4) Power and consumable supplies for the operation of power equipment;

(5) Insurance;

(6) Social Security and old age and unemployment contributions.

"Force Account" is a term used when work is ordered by the Engineer to be done by a contractor without prior agreement as to cost thereof. Work done by Force Account shall become a part of the work of the duly authorized contracted work.

All work done on a Force Account basis will be paid for in the manner hereinafter described, and the compensation thus provided shall be accepted by the Contractor as payment in full for the use of small tools, superintendent's services, timekeeper's service, premium on bond, and all other overhead expenses incurred in the prosecution of all work done on a Force Account basis.

Payment will be made in accordance with Section 9-1.03, *"Force Account Payment"* of the *State Specifications*. The Contractor's timekeeper and the Inspector shall compare the records of extra work on a Force Account basis at the end of each day. Copies of these records will be made in duplicate by the Inspector and shall be signed by both the Inspector and the Contractor's timekeeper, one (1) copy being forwarded respectively to the Engineer and the Contractor.

The City reserves and shall have the right, by the Engineer's written order, to make increases, decreases, omissions or other changes, from time to time, in the plans or in the character or quantity of the work, provided such alterations do not change the total cost of the project, based on the originally estimated quantities and the contract unit prices, by more than twenty-five percent (25%), and provided further that such alterations do not change the total estimated cost of any major item, based on the originally estimated quantities and the contract unit price by more than twenty-five percent (25%). A major item shall be any item of which the total cost is equal to or greater than ten percent (10%) of the total contract price, computed on the basis of the originally estimated quantity and the contract unit price. Should it appear to the City to be desirable to make changes in excess of that herein permitted, the same shall be covered by supplemental agreement.

The Contractor shall not start work on any alteration requiring a supplemental agreement until such an agreement, setting forth the adjusted prices, has been executed by the City and the Contractor.

75. CORRECTION OF WORK

All work, all materials, whether incorporated in the work or not, all processes of manufacture, and all methods of construction shall be at all times and places subject to the inspection of the Engineer who shall be the final judge of the quality and suitability of the work, materials, processes of manufacture, and methods of construction for the purposes for which they are used. Should they fail to meet the Engineer's approval, they shall be forthwith

reconstructed, made good, replaced and/or corrected, as the case may be, by the Contractor at the Contractor's expense. In no way shall the Engineer's approval of construction methods be construed as assurance that the end product will comply with the design requirements. Rejected material shall immediately be removed from the site. If, in the opinion of the Engineer, it is undesirable to replace any defective or damaged materials or to reconstruct or correct any portion of the work injured or not performed in accordance with the contract documents, the compensation to be paid to the Contractor hereunder shall be reduced by such amount as in the judgement of the Engineer shall be equitable.

The Contractor shall promptly remove all work condemned by the Engineer as failing to conform to the contract and shall promptly replace and re-evaluate such work in accordance with the contract and without additional expense to the City, and shall bear all costs of making good any work destroyed or damaged by such removal or replacement.

Any materials condemned or rejected by the Engineer as not meeting the requirements of these specifications may be branded or otherwise marked by the Engineer and shall, on demand, be at once removed by the Contractor to a satisfactory distance from the work. If the Contractor does not remove such material within a reasonable time, fixed by written notice, the City may remove and store the materials at the expense of the Contractor. If the Contractor does not pay the expense of such removal and storage within ten (10) days thereafter, the City may, upon ten (10) days written notice, sell such materials at auction or at private sale. The City will account for the net proceeds thereof after deducting all the costs and expenses that should have been borne by the Contractor.

Contractor shall have no more than 30 calendar days from Notice of Correction or *"Punch List"* to correct all deficiencies listed in such notice, unless otherwise specified. If all required corrections are not completed in the specified time frame, the City may complete such deficiencies or accept the defective work subject to an equitable deduction from the contract price which may be made therefor by the City.

Reexamination of any work may be ordered by the Engineer at any time prior to final acceptance, and if so ordered, the work must be uncovered by the Contractor. If such work be found in accordance with the contract, the City will pay the cost of reexamination and replacement. If such work be found not in accordance with the contract, the Contractor shall pay such costs.

No partial payment, inspection, taking possession of, or other act made or done by the Engineer or the City with respect to the work prior to the final completion and acceptance thereof shall affect or prejudice the right of the Engineer or the City to reject any defective work or material or to require the complete fulfillment of all the provisions of the contract.

If the Engineer deems it expedient and not in the best interest of the City to correct work injured or done not in accordance with the contract, the defective work may be accepted subject to an equitable deduction from the contract price which may be made therefor by the City upon certificate from the Engineer.

76. Claims For Extra Costs

No claim for extra work or cost shall be allowed unless the same was done in pursuance of a written order of the Engineer approved by the City, as aforesaid, and the claim presented with the first estimate after the changed or extra work is done. When work is performed under the terms of Section 66, *"Changes In Work,"* of the General Conditions, the Contractor shall furnish satisfactory bills, payrolls, and vouchers covering all items of cost and, when requested by the City, give the City access to accounts relating thereto.

77. CLAIMS AND PROTESTS

If the Contractor considers any work demanded of the Contractor to be outside the requirements of the contract, or if the Contractor considers any instruction, ruling, or decision of the Engineer to be unfair, the Contractor shall, within two (2) working days after any such demand is made, or instruction, ruling, or decision is given, file a written protest with the Engineer, stating clearly and in detail, his objections and the reasons therefor. Except for such protests and objections as are made of record in the manner and within the time above stated, the Contractor shall be deemed to have waived all claims for extra work, damages, and extensions of time on account of demands, instructions, rulings, and decisions of the Engineer.

Upon receipt of any such protest from the Contractor, the Engineer will review the demand, instruction, ruling, or decision objected to and will promptly advise the Contractor, in writing, of the Engineer's final decision, which shall be binding on all parties, unless within two (2) working days thereafter, the Contractor shall file with the Council a formal protest against said final decision of the Engineer. The Council will consider and render a final decision of any such protest within thirty (30) calendar days of receipt of same.

All construction claims of $375,000 or less shall be resolved in compliance with the provisions of Section 20104 of the Public Contract Code which requires that all claims be in writing and include the documents necessary to substantiate the claim. The City of Daly City or its subsidiary Agency shall respond in writing to any written claim within the following timeframe:

For claims of less than $50,000:	45 Days
For claims of $50,000 - $375,000:	60 Days

78. SUSPENSION OF WORK

Should the City be prevented or enjoined from proceeding with work or from authorizing its prosecution either before or after its prosecution, by reason of any litigation, the Contractor shall not be entitled to make or assert claim for damage by reason of said delay, but time for completion of the work will be extended to such reasonable time as the City may determine will compensate for time lost by such delay with such determination to be set forth in writing.

The Engineer may at any time, by notice in writing to the Contractor, suspend any part of the work for such period of time as may in his opinion be necessary to prevent improper execution of the work, and the Contractor shall have no claim for damage or additional compensation on account of any such suspension.

If it should become necessary to stop work for a indefinite period, the Contractor shall store all materials in such manner that they will not become an obstruction, nor become damaged in any way, and the Contractor shall take every precaution to prevent damage or deterioration of the work performed; the Contractor shall provide suitable drainage by opening ditches, shoulder drains, etc., and erect temporary structures where necessary.

79. UNANTICIPATED CONCEALED CONDITIONS

If the Contractor encounters a subsurface or other concealed condition, including hydrocarbons or toxics, which differ materially from those indicated in the City's Project Plans and Specifications, the Contractor shall promptly, and before this conditions is disturbed, notify the Engineer of this subsurface condition at the site and shall include indication of why this condition differs materially from those ordinarily encountered and generally recognized as inhering to work of the character provided for in this contract.

The Engineer shall investigate the site after receiving the notice. If the condition does materially affect performance of the contract:

(a) The City may suspend further performance of work by the Contractor. A formal written notice shall specify the date and the estimated duration of the suspension. Any given suspension shall not exceed forty-five (45) consecutive calendar days, and the total of all suspensions shall not exceed ninety (90) calendar days. If suspensions not caused by, or caused in part by, the Contractor exceed these time periods, then the Contractor at its option may terminate this contract.

(b) Upon receiving such notice, the Contractor shall promptly suspend further performance of the work, protect or store materials upon the site, take precaution to prevent damage or deterioration to the work already performed, provide suitable drainage and temporary structures or barriers where necessary.

(c) For a suspension of work exceeding ten (10) working days, or where, in the opinion of the Engineer, the conditions do materially so differ and cause an increase or decrease in the Contractor's cost of, or the time required for performing any part of the work under this contract, then the Contractor may submit a written request for an equitable adjustment to the contract. Any adjustment only shall be made upon approval by the Engineer, and by a formal Change Order issued by the City.

(d) No request for equitable adjustment to the contract under this paragraph shall be allowed if either (1) the prior notice provisions of this Section are not provided by the Contractor to the Engineer, or (2) if the request for equitable adjustment is made after the final payment under this contract.

(e) These provisions prevail over other differing Contract provisions or differing provisions of these General Conditions. If the Contractor and the Engineer are unable to agree upon an equitable adjustment, change order or extension of time for performance, Contractor's remedies are limited to a claim therefor; however, the City shall not be liable to Contractor for any claims, costs, losses or damages incurred, claimed or sustained by Contractor on or in connection with any other project or anticipated project or for claimed delay damages.

80. FINAL REVIEW/ACCEPTANCE OF PROJECT WORK

Contractor shall make a written request to the Engineer for a final review of the project work at least five (5) working days in advance of the proposed review date. Failure to comply with this section negates any date the Contractor has proposed for final review and acceptance of the project work.

The foregoing procedure also applies to completion of plant maintenance periods.

The date of completion of the project work shall be the date of formal acceptance of project completion by the City Council, or other duly authorized authority.

81. MUTUAL RESPONSIBILITY OF CONTRACTORS

If, through acts of neglect on the part of the Contractor, any other Contractors or any subcontractors shall suffer loss of damage on work, the Contractor agrees to settle with such other Contractor or subcontractors by agreement or arbitration if such other Contractor or subcontractors will so settle. If such other Contractor or subcontractor shall assert any claim against the City on account of any damage alleged to have been sustained, the City shall notify the Contractor, who shall indemnify, save harmless, and defend the City, its subsidiary agencies and their officers, officials, employees, volunteers, and agents against such claim.

82. GUARANTY

A. General:

Neither the final certificate of payment nor any provision in the contract documents nor partial or entire occupancy of the premises by the Owner shall constitute an acceptance of work not done in accordance with the contract documents or relieve the Contractor of liability in respect to any express warranties or responsibility for faulty materials or workmanship.

The Contractor hereby unconditionally guarantees that the work will be done in accordance with the requirements of the contract and further guarantees that work of the contract to be made and remain free of defects in workmanship and materials for a period of one (1) year from the date of acceptance by City of the contract, unless a longer guarantee period is specifically called for in the contract. The Contractor hereby agrees to repair or replace any and all work done, together with any other adjacent work which may have been damaged or displaced in so doing, that may prove to be not in accordance with the requirements of the contract, or that may be defective in workmanship or materials within the guarantee period specified, without any expense whatsoever to the City, ordinary wear and tear and unusual abuse and neglect excepted. Contract bonds shall remain in full force and effect during the guarantee period.

The Contractor further agrees that within ten (10) calendar days after being notified in writing by the Engineer of any work not in accordance with the requirements of the contract, or any defects in the work, the Contractor will commence and prosecute with due diligence, all work necessary to fulfill the terms of the guarantee and to complete the work within a reasonable period of time and in the event the Contractor fails to comply, the Contractor does hereby authorize said Engineer to proceed to have such work done, at the Contractor's expense, and the Contractor shall pay the cost thereof upon demand. The City shall be entitled to all costs, including reasonable attorneys' fees necessarily incurred upon the Contractor's refusal to pay the above costs.

Nothing in this section shall be construed to limit, relieve or release Contractor's, subcontractors' and equipment supplier's liability to the City for damages sustained as the result of latent defects in the equipment furnished caused by the negligence of the supplier's agents, employees or subcontractors. Stated in another manner, the warranty contained in this section shall not amount to, nor shall it be deemed to be, a waiver to the City of any rights or remedies (or time limits in which to enforce such rights or remedies) it may have against the supplier of the equipment to be furnished under these specifications for defective workmanship or defective materials under the laws of this State pertaining to acts of negligence.

83. EQUAL EMPLOYMENT OPPORTUNITY

No person in the United States shall, on the grounds of race, color, national origin, or sex, be excluded from participation in, be denied the benefits of, or be subjected to discrimination under any program or activity receiving Federal financial assistance. Reference Title VI of the Civil Rights Act of 1964 (42 USC 2000d) and Section 112 of Public Law 92-65.

All contractors directly participating in the City's project agree that, during and in connection with the associated agreement relating to the City's project, (1) they will comply, to the extent applicable, as contractors, subcontractors, lessees, suppliers, or in any other capacity, with the applicable provisions of the Regulations of the United States Department of Commerce (Part 8 of Subtitle A of Title 15 of the Code of Federal Regulations) issued pursuant to Title VI of the Civil Rights Act of 1964 (P.L. 88-352), and will not thereby discriminate against any person on the grounds of race, color, or national origin in their employment practices, in any of their own contractual arrangements, in all services or accommodations which they offer to the public, and in any of their other business operations; (2) they will provide information required by or pursuant to said Regulations to ascertain compliance with the Regulations and these assurances.

The contractor will (1) ensure that minorities and women are given maximum employment opportunities for any training or employment made possible by or resulting from this contract, and (2) not discriminate against any employee or applicant because of race, color, religion, sex, or national origin and will take affirmative action to ensure that applicants are employed and that employees are treated during employment without regard to race, color, religion, sex, or national origin. Such action shall include, but not be limited to employment, upgrading, demotion or transfer, recruitment or recruitment and selection for training, including apprenticeship. Reference Executive Order No. 11246; Department of Labor Regulation 41, CFR Chapter 60, as amended in 1978; and Title IV of the Civil Rights Act of 1965.

The contractor will (1) to the greatest extent feasible, give opportunities for training and employment to lower income residents of Daly City, and award contracts to business concerns located in or owned in substantial part by residents of Daly City; and (2) post in conspicuous places available to employees and applicants for employment, notices to be provided setting forth the provisions of this Equal Employment Opportunity and Affirmative Action Program. Reference Section 3 of the Housing and Urban Development Act of 1968 as amended, 12 U.S.C. 17014.

Further, the contractor agrees to utilize Disadvantaged Business Enterprises (small, female, and minority businesses) whenever possible as sources of suppliers and services in contract work. The contractor shall take affirmative steps to assure the utilization of Disadvantaged Business Enterprises when procuring goods and services. Such steps shall include, but not be limited to, inclusion of Disadvantaged Business Enterprises on solicitation lists; division of total requirements into smaller tasks or quantities to permit maximum Disadvantaged Business Enterprises participation; establishing delivery schedules which will encourage participation by Disadvantaged Business Enterprises using the services and assistance of the Small Business Administration, the Office of Minority Business Enterprise of the Department of Commerce, and the Community Services Administration as required. Reference Federal Procurement Standards, Attachment O, Circular No. A-102.

Non-compliance with the requirements of said Regulations and above stated assurances, by contractors, subcontractors, lessees, or suppliers, shall constitute a breach of their contractual arrangements with the City whereby said agreements may be cancelled, terminated, or suspended in whole or in part or may be subject to enforcement otherwise by appropriate legal proceedings.

NOTE: EXCEPT FOR CONTRACTS WITH FEDERAL FUNDING, PARTICIPATION IN AFFIRMATIVE ACTION PROGRAMS OR DBE PARTICIPATION WILL NOT BE CONSIDERED AS A BASIS FOR CONTRACT AWARD.

84. AREA AFFIRMATIVE ACTION PLAN

The Area Plan applicable to a given project shall be the San Mateo Plan for minority employment. Organizations subscribing to said plan include, but are not limited to, certain trades from the San Mateo County Building and Construction Trade Unions, and General Specialty Contractors Associations.

The Contractor's affirmative action plan shall specify at a minimum, the following workforce goals established for San Mateo County:

Minority ..... 25.6% craft by craft
Female ..... 6.9% craft by craft

NOTE: EXCEPT FOR CONTRACTS WITH FEDERAL FUNDING PARTICIPATION IN AN AFFIRMATIVE ACTION PLAN WILL NOT BE CONSIDERED AS A BASIS FOR CONTRACT AWARD.

85. PREVAILING WAGE

In accordance with Section 1770 of the California Labor Code, the City has ascertained and does hereby specify that the prevailing wage rates shall be those established by collective bargaining agreements between the duly recognized labor organizations and the employer associations covering the Daly City, San Mateo County labor rates for the particular craft, classification, or type of workers needed to execute the Contract as the same are on file with the Engineer. The said rates shall include all employer payments that are required by Section 1773.1 of the California Labor Code.

That further the City has ascertained from the Director of the Department of Industrial Relations, the general prevailing rate of per diem wages, and the general prevailing rate for legal holiday and overtime work for each craft needed in the execution of the contract. City will furnish to Contractor, upon request, a copy of such prevailing rates. It shall be the duty of the Contractor to post a copy of such prevailing wages at the job site. As used herein, "legal holiday" means such day as is recognized in the respective collective bargaining agreement.

The Contractor shall comply with Labor Code Section 1775. In accordance with said Section 1775, the Contractor shall forfeit, as a penalty to the City, fifty dollars ($50.00) for each calendar day, or portion thereof, for each worker paid less than the stipulated prevailing rate for such work or craft in which said worker is employed for any work done under the contract by the Contractor or by any subcontractor under the Contractor, in violation of the provisions of the Labor Code, and in particular, Section 1770 to Section 1780, inclusive.

In addition to said penalty, and pursuant to said Section 1775, the difference between such stipulated prevailing wage rates and the amounts paid to each worker for each calendar day, or portion thereof, for which each worker was paid less than the stipulated prevailing rate shall be paid to each worker by the Contractor.

The wage rates set forth are the minimum that may be paid by the Contractor. Nothing herein contained shall be construed as preventing the Contractor from paying more than the minimum set forth.

No extra compensation whatever shall be allowed by the City due to inability of the Contractor to hire labor at the minimum rate nor for any necessity for payment by the Contractor for subsistence, travel time, overtime, or other added compensation, all of which possibilities are elements to be considered and ascertained to the Contractor's own satisfaction in preparing the bid.

If it becomes necessary to employ a craft other than those listed, the Contractor shall notify the City immediately and the City will determine the additional prevailing rate from the Director of the Department of Industrial Relations and the rate thus determined shall be applicable as a minimum at the time of initial employment.

The Contractor shall pay travel and subsistence payments to workers needed to execute the work as such travel and subsistence payments are defined in the applicable collective bargaining agreement filed with the Department of Industrial Relations pursuant to Labor Code Section 1773.8.

86. CLEAN AIR ACT AND FEDERAL WATER POLLUTION CONTROL ACT

The Contractor agrees to comply with Federal clean air and water standards during the performance of this contract and specifically agrees to the following:

(a) The Contractor agrees to comply with all applicable State regulations including those promulgated by the State Water Resources Control Board, the Regional Water Quality Control Board, and the Bay Area Air Quality Management District.;

(b) The term "facility" means (1) any building, plant, installation, structure, mine, vessel, or other floating craft, location or site of operations, (2) owned, leased, or supervised, (3) by the Contractor and subcontractors, (4) for the construction, supply and service contracts entered into by the Contractor;

(c) That any facility to be utilized in the accomplishment of this contract is not listed on the Environmental Protection Agency's List of Violating Facilities pursuant to 40 CFR, Part 15.20;

(d) That in the event a facility utilized in the accomplishment of this contract becomes listed on the EPA list, this contract may be cancelled, terminated or suspended in whole or in part;

(e) That it will comply with all the requirements of Section 114 of the Air Act and Section 308 of the Water Act relating to inspection, monitoring, entry, reports, and information, as well as all other requirements specified in Section 114 and Section 308, respectively, and all regulations and guidelines issued thereunder;

(f) That it will promptly notify the Government of the receipt of any notice from the Director, Office of Federal Activities, Environmental Protection Agency, indicating that any facility utilized or to be utilized in the accomplishment of this contract is under consideration for listing on the EPA list of Violating Facilities;

(g) That it will include the provisions of paragraphs "a" through "g" in every subcontract or purchase order entered into for the purpose of accomplishing this contract, unless otherwise exempted pursuant to the EPA regulations implementing the Air or Water Act (40 CFR, Part 15.5), so that such provisions will be binding upon each subcontractor or vendor;

(h) That in the event that the Contractor or the subcontractors for the construction, supply and service contracts entered into for the purpose of accomplishing this contract were exempted from complying with the above requirements under the provisions of 40 CFR, Part 15.5(a), the exemption shall be nullified should the facility give rise to a criminal conviction (See 40 CFR, Part 15.20) during the accomplishment of this contract. Furthermore, with the nullification of the exemption, the above requirements shall be effective. The Contractor shall notify the Government, as soon as the contractor or subcontractor's facility is listed for having given rise to a criminal conviction noted in 40 CFR, Part 15.20. (40 CFR, Part - Various: Available for Review at office of City Engineer)

The Contractor shall comply with all State, special district, or other public entity air pollution control rules, regulations, ordinances, and statutes which apply to any work performed pursuant to the contract, including any air pollution control rules, regulations, ordinances and statutes specified in Section 11017 of the Government Code and any amendments thereto.

Attention is directed to Sections 7-1.01F, *"Air Pollution Control,"* and 7-1.01G, *"Water Pollution,"* of the *State Specifications* and any amendments thereto.

87. STORMWATER POLLUTION PREVENTION REQUIREMENTS

The Contractor shall comply with the City's NPDES Stormwater Waste Discharge permit #CA0029921 for discharges to the storm drain system, including the adherence to all applicable Best Management Practices to prevent pollutants, including sediment, from entering the storm drains.

In order to further prevent stormwater pollution, for all construction contracts requiring surface cleaning; the Contractor or Subcontractor performing such cleaning either shall be a *"Bay Area Stormwater Management Agencies Association (BASMAA)"* recognized mobile cleaner, or shall utilize, to the greatest extent practical, BASMAA recommended equipment and pollution prevention practices for proper cleaning and washwater disposal, so that any water containing pollutants does not enter the City storm drain system.

In addition, as a minimum, to obtain a permit for contract construction work, the Contractor shall provide information relating to proposed storm stormwater pollution prevention practices on a questionnaire provided as part of Contractor's Permit Application.

88. SOUND CONTROL REQUIREMENTS

The Contractor shall comply with all local sound control and noise level rules, regulations, and ordinances which apply to any work performed pursuant to the contract.

Each internal combustion engine, used for any purpose on the job or related to the job, shall be equipped with a muffler of a type recommended by the manufacturer. No internal combustion engine shall be operated on the project without said muffler.

89. DUST ALLEVIATION AND CONTROL

The Contractor shall be responsible for and shall provide dust abatement and control measures satisfactory to the Engineer, continuously during the course of the work, including one or more watering trucks fully manned and operable.

90. NATIONAL HISTORIC PRESERVATION ACT OF 1966

The Contractor agrees to contribute to the preservation and enhancement of structures and objects of historical, architectural or archaeological significance when such items are found and/or unearthed during the course of project construction and to consult with the State Historic Preservation Officer for recovery of the items. (References available for review at office of City Engineer: National Historic Preservation Act of 1966, (80 Stat 915, 16 USC 470) and Executive Order No. 11593 of May 31, 1971.)

91. REQUIRED PROVISIONS DEEMED INSERTED

Each and every provision of law and clause required by law to be inserted in this contract shall be deemed to be inserted herein and the contract shall be read and enforced as though it were included herein, and if through mistake or otherwise any provision is not inserted, or is not correctly inserted, then upon the application of either party the contract shall forthwith be physically amended to make such insertion or correction.

92. RIGHT OF THE CITY TO TERMINATE CONTRACT

In the event that any of the provisions of this contract are violated by the Contractor, or by any of the Contractor's subcontractors, the City may serve written notice upon the Contractor and the Surety of its intention to terminate the contract, such notices to contain the reasons for such intention to terminate the contract, and unless within ten (10) calendar days after the serving of such notice upon the Contractor, such violations or delay shall cease and satisfactory arrangement or correction be made, the contract shall, upon the expiration of said ten (10) calendar days, cease and terminate.

In the event of any such termination, the City shall immediately serve notice thereof upon the Surety and the Contractor, and the Surety shall have the right to take over and perform the contract; provided, however, that if the Surety does not commence performance thereof within ten (10) calendar days from the date of mailing to such Surety of notice of termination, the City may take over the work and prosecute the same to completion by contract or by force account for the account and at the expense of the Contractor, and the Contractor and Contractor's Surety shall be liable to the City for any excess cost occasioned by the City thereby, and in such event the City may take possession of and utilize in completing the work, such materials, appliances, and plant as may be on the site of the work and necessary therefor.

93. FAILURE TO COMPLETE WORK

In the event that the Contractor fails to perform any of the terms of the contract, the Contractor shall be in default and notice in writing will be served upon the Contractor by the City of such default, and should the Contractor neglect or refuse to comply with all the terms of the contract immediately, as specified in such notice, the City shall have the power to terminate all of the rights of the Contractor in such contract, but said termination shall not affect or terminate any of the rights of the City as against the Contractor or Contractor's surety then existing or which may thereafter accrue because of such default.

If the rights of the Contractor are terminated, as above provided, the City may, at the expense of the Contractor and Contractor's surety, complete the contract, or cause the same to be completed.

In the event of such termination, all monies due the Contractor under the terms of the contract shall be retained by the City, but such retention shall not release the Contractor or Contractor's surety from liability for the Contractor's default. In such event, however, the Contractor and Contractor's surety will be credited with the amount of money so retained toward any amount by which the cost of completion of the contract, as above provided in this section, exceeds the contract price.

The determination by the Engineer of the question as to whether the Contractor has failed to perform any of the terms of the contract shall be conclusive upon the Contractor, the Contractor's surety and any and all other parties who may have any interest in the contract or any portion thereof.

The foregoing provisions of this section shall be in addition to all other rights and remedies available to the City under the law.

94. OWNERSHIP OF WORK PRODUCT

Work products of the Contractor and/or subcontractors on this project, which are delivered under the contract or which are developed, produced, and paid for under the contract shall become the property of the City.

95. NONCOLLUSION AFFIDAVIT TO BE EXECUTED BY BIDDER AND SUBMITTED WITH BID

In accordance with Section 7106 of the Public Contract Code, of the State of California as specified, the bidder shall submit an affidavit affirming that the bidder has not participated in various collusive activities. A bid not accompanied by, or which is made without such affidavit, or in violation thereof, will not be considered. If the bidder is a corporation, said affidavit shall be signed by a duly authorized officer of the corporation. This affidavit will be made part of and referenced in the contract of the successful bidder.

96. CERTIFICATION FOR CONTRACTS, GRANTS, LOANS, AND COOPERATIVE AGREEMENTS

As required by Section 1352 of Title 31 USC, Federal funds cannot be used for the purpose of lobbying individuals in order to obtain a contract award, a grant or loan, or any other cooperative agreement. To comply with this requirement, a certification is now included in the contract documents and must be signed by the construction contractor at the time a bid is submitted.

97. FIVE YEAR MORATORIUM ON NEW ASPHALT PAVEMENTS

In general, it is the City's standard policy that no trenching will be allowed on a City Street until a period of five calendar years has expired from the previous time of asphalt overlay. In any case, when trenching occurs on a city street, the method of pavement restoration shall be at the option of the Engineer, in accordance with the provisions of this section.

A. Should trench excavation or cut in pavement become necessary on a street resurfaced within the last five (5) years, the method of pavement restoration, at the option of the Engineer, shall be as follows:

1. Replace entire affected city block with Asphalt Concrete with thickness equivalent to that of existing, or;
2. Asphalt Pavement
   a. Transverse trenches (perpendicular to centerline) – replace existing pavement, six (6) inches of deep lift Asphalt Concrete:
      i. For the full width of affected side of street, on Median Curb Divided streets, or;
      ii. For the full width of street, on Non-Median Curb Divided streets.
   b. Longitudinal trenches (parallel to centerline) – replace existing pavement six (6) feet beyond end of trench, with a minimum of six (6) inches of deep lift Asphalt Concrete:
      i. For the full width of affected side of street, on Median Curb Divided streets, or;
      ii. For the full width of street, on Non-Median Curb Divided street.

or;

3. Cement Concrete Pavement Restoration shall be as specified by the City Engineer.

- End of Section -

THIS PAGE INTENTIONALLY LEFT BLANK

THIS PAGE INTENTIONALLY LEFT BLANK

PART III – TECHNICAL SPECIFICATIONS

(Yellow Pages)

CITY OF DALY CITY

PART III - TECHNICAL SPECIFICATIONS

TABLE OF CONTENTS

Division 1

01310	Construction Schedule A
01311	Construction Schedule B
01340	Submittals
01410	Testing Laboratory Services
01600	Material
01720	Project Record Documents
01730	Operating and Maintenance Data

Division 2

02100	Clearing, Grubbing and Site Preparation
02200	Engineered Fill
02210	Site Grading
02220	Roadway Subgrade Preparation
02221	Trench Excavation and Backfill
02270	Erosion Control/Dust Control
02400	Storm Drain System
02410	Subsurface Drains
02445	Fences and Gates
02453	Traffic Signals
02480	Landscape Soil Preparation
02483	Planting
02486	Irrigation
02499	Landscape Maintenance
02500	Paving and Surfacing
02510	Crack Sealing
02520	Slurry Seal
02530	Curb Ramps and Other Minor Concrete Facilities
02580	Traffic Striping and Signing
02710	Water System Piping and Accessories
02720	Sanitary Sewer Collection System

Division 3

03300 Minor Concrete

Division 9

09900 Painting

Division 16

16550 Street Lighting System

SECTION 01310 - CONSTRUCTION SCHEDULE A

CONTENTS:

Part 1 – General 1

1.01 Work Included 1

1.02 Related Requirements 1

1.03 Reference Standards 1

1.04 Quality Assurance 1

1.05 Measurement And Payment 1

Part 2 - Products 1

Part 3 - Execution 1

3.01 Schedule Of Operations 1

SECTION 01310 - CONSTRUCTION SCHEDULE A

PART 1 – GENERAL

1.01 WORK INCLUDED

A. Provide a schedule of major construction activities.

1.02 RELATED REQUIREMENTS

A. Section 01340, *"Submittals"*

1.03 REFERENCE STANDARDS

Not used

1.04 QUALITY ASSURANCE

Not used

1.05 MEASUREMENT AND PAYMENT

Not used

PART 2 - PRODUCTS

Not used

PART 3 - EXECUTION

3.01 SCHEDULE OF OPERATIONS

A. The Contractor shall submit to the Engineer a performance schedule within ten (10) working days after the contract award. This schedule of operations may be either a bar chart or critical path method (CPM) network and shall show the Contractor's general approach to the overall project and a detailed plan of mobilization, procurement, and construction during the first ninety (90) calendar days of the Contract.

B. The schedule shall show the sequence and interdependence of all activities, including shop drawing submittals, and shall be prepared to show a continuous and logical sequence of work. The schedule shall establish a critical path or controlling item of work. The duration of any activity shall range from three (3) working days to fifteen (15) working days.

C. Any activity that cannot be completed by its original completion date shall be considered to be "behind schedule"

D. At not less than monthly intervals, and when requested by the Engineer, the Contractor shall submit a revised schedule for all work remaining. If, at any time, the Engineer considers the project completion date to be in jeopardy because of activities "behind schedule," the Contractor shall submit additional schedules and diagrams indicating how the Contractor intends to accomplish the remaining work to meet the Contract completion date.

E. All change orders, regardless of origin, shall be reflected in the schedule.

F. Failure to keep schedule of work current may be subject to withholds.

G. When, in the judgment of the Engineer, it is necessary to accelerate any part of the work ahead of schedule, the Contractor shall, when directed, concentrate his efforts on such part of the work.

H. The Contractor shall establish a dollar value for each activity. The dollar value shall include all labor, materials, overhead, and profit. The sum of all activity values shall equal the total value of the Contract.

End of Section

SECTION 01311 - CONSTRUCTION SCHEDULE B

CONTENTS:

Part 1 - General 1

1.01 Work Included 1

1.02 Related Requirements 1

1.03 Reference Standards 1

1.04 Quality Assurance 1

1.05 Measurement and Payment 1

Part 2 - Products 1

Part 3 - Execution 1

3.01 Schedule of Operations 1

3.02 Time Impact Analysis for Changes, Delays, Time Extensions, and Contractor Requests 5

SECTION 01311 - CONSTRUCTION SCHEDULE B

PART 1 - GENERAL

1.01 WORK INCLUDED

A. Provide a schedule of major construction activities.

1.02 RELATED REQUIREMENTS

A. Section 01340, *"Submittals"*

1.03 REFERENCE STANDARDS

Not used

1.04 QUALITY ASSURANCE

Not used

1.05 MEASUREMENT AND PAYMENT

Not used

PART 2 - PRODUCTS

Not used

PART 3 - EXECUTION

3.01 SCHEDULE OF OPERATIONS

The Contractor shall submit to the Engineer a Preliminary Progress Schedule and a Critical Path Method (CPM) Schedule (along with updates) as described below:

A. Preliminary Progress Schedule - The Contractor shall submit to the Engineer, within ten (10) working days after date of the contract award, a Preliminary Progress Schedule covering the Contractor's activities during the first ninety (90) calendar days of the contract. The Preliminary Progress Schedule shall be subject to favorable review by the Engineer, and shall be amended as required by the Engineer.

B. Critical Path Method (CPM) Schedule - The Contractor shall submit an acceptable CPM Schedule to the Engineer within thirty (30) calendar days after the receipt of the Notice to Proceed. Subsequent revisions to said schedule shall be submitted as set forth hereinafter. The requirement for the CPM Schedule is included to assure adequate planning and execution of the work and to assist the Engineer in appraising the reasonableness of the proposed schedule and evaluating progress of the work. The CPM Schedule submitted under this Specification shall utilize a critical path method (CPM) format, either the precedence or arrow diagramming method with schedule showing completion of contract completion date, with neither Contractor nor the City owning "float." No more than one (1) progress payment will be made prior to submission and acceptance of the CPM Schedule.

1. The CPM Schedule system shall consist of diagrams and accompanying mathematical analyses. The diagrams shall show elements of the project in detail and an entire project summary. Diagrams shall show the order and interdependence of activities and sequence in which the work is to be accomplished as planned by the Contractor. The basic concept of a network analysis diagram shall be followed to show how the start of a given activity is dependent on the completion of preceding activities and its completion restricts the start of following activities. Detailed network activities shall include, in addition to construction activities, the submittal and approval of samples and equipment, fabrication of special material and equipment and their installation and testing. Cost value of each activity shall be included. All activities of the Owner and the Engineer that affect progress and required contract dates for completion of all or parts of the work shall be shown. The selection and number of activities shall be subject to favorable review by the Engineer. Summary networks shall be time-scaled. Duration shall be in working days and shall not exceed fifteen (15) working days, except for submittal and delivery items. Where the duration of continuous work exceeds fifteen (15) working days, work items in the Construction Schedule shall be subdivided by location, approximate stationing or other sub-element of the work.

   The graphic network diagram shall include for each activity, the description, activity number, the estimated duration in working days, and all activity relationship lines. The network diagram shall be drawn for the early start of all activities. If the precedence technique is utilized, the schedule report shall include a calendar in working days, a network report sorted by early start and a logic table report sorted by preceding work item. If the arrow technique is utilized, the schedule report shall include a calendar in working days, a network report sorted by early start, a network report sorted by I-J numbers, and a network sorted by slack time and I-J numbers.

2. The critical path shall be shown on all reports and on the graphic network diagram. The activities that constitute the critical path shall be identified.

3. The mathematical analysis of the network diagram shall include a tabulation of each activity. The following information shall be furnished as a minimum for each activity:

a. preceding and following event numbers

b. activity description and number

c. estimated duration of activities

d. earliest start date (by calendar date)

e. earliest finish date (by calendar date)

f. actual start date (by calendar date)

g. actual finish date (by calendar date)

h. latest start date (by calendar date)

i. latest finish date (by calendar date)

j. slack or float

k. percentage of activity completed

l. cost value of each activity

4. The program shall be capable of accepting revised completion dates as modified by approved time adjustments and re-computations of all tabulation dates and float accordingly.

5. Submission and review of the system shall be as follows:

   a. The complete network analysis system, consisting of the detailed network mathematical analysis and network diagrams, shall be submitted within thirty (30) calendar days after receipt of Notice to Proceed.

   b. The Contractor shall participate in a review and evaluation of the proposed network diagrams and analysis by the Engineer. Any revisions necessary as a result of this review shall be resubmitted for review by the Engineer within ten (10) calendar days. When completed, the favorably reviewed schedule shall then be the schedule to be used by the Contractor for planning, organizing, and directing the work, and for reporting progress. If the Contractor thereafter desires to make significant changes in his method of operating and scheduling, he shall notify the Engineer in writing stating the reasons for the change.

c. The Contractor shall submit at monthly intervals a report of the actual construction progress. Each monthly report shall cover a period of approximately thirty (30) days ending around the 30th of each month. The monthly reports shall be submitted within ten (10) calendar days of the end of the reporting period.

i. If the project is proceeding on schedule, the monthly update report may consist of a marked-up copy of the graphical network diagram. This submittal shall clearly indicate the status of any minor shifts in sequence or schedule and the estimated completion date or percent complete of all activities currently in progress. The contract completion date shall also be indicated. The Contractor shall submit a narrative report relating to status of construction, the schedule, and factors that may affect the remainder of the schedule. The report shall show the activities or portions of activities completed during the reporting period. The report shall state the percentage of the work actually completed and scheduled as of the report date and the progress along the critical path in terms of days ahead or behind the allowable dates.

ii. If, in the opinion of the Engineer, the project is behind schedule, the monthly report shall include a revised network diagram and/or mathematical analysis showing the Contractor's proposed revised schedule. An analysis of the effect that the delay has on progress along other paths shall also be included in the report. The Contractor shall also submit a narrative report with each updated analysis which shall include but not be limited to a description of current and anticipated problem areas, delaying factors and their impact, and an explanation of corrective actions taken or proposed.

iii. A minimum of eight (8) copies of the periodic reports shall be submitted to the Engineer, who shall return two (2) copies to the Contractor after their approval.

6. To the extent that the favorably reviewed initial Construction Schedule, or revisions thereto, indicate anything not jointly agreed upon, it shall be deemed to be not favorably reviewed by the Engineer. Any omission of work from the detailed schedule, otherwise required for Contract compliance, will not excuse the Contractor from completing such work within any applicable completion date. The CPM Schedule shall be generated by computer methods.

C. Schedule Review - Once each month, on a date mutually agreed upon, but no later than seven (7) working days after the monthly schedule progress report date, a job-site meeting will be held to review the Construction Schedule and job progress. The Contractor shall also attend weekly meetings scheduled by the Engineer to review the progress of the work in the preceding week and in the subsequent work, coordinate the work with public agencies or other contractors as required, and allow the Engineer to plan his activities for testing, inspection, etc.

D. Schedule Revisions - The conditions under which the Engineer will require revisions of the Construction Schedule include the following:

1. When delay in completion of any work item or sequence of work items results in an estimated extension of project completion by either twenty (20) working days or by five percent (5%) of the remaining duration of time to complete the Contract, whichever is less.

2. When delays in submittals or deliveries make re-planning or rescheduling of the work necessary.

3. When the schedule does not represent actual prosecution and progress of the work.

4. When any change to the sequence of activities, the completion date for major portions of the work, or when changes occur which affect the critical path.

5. When Contract modification necessitates schedule revision, the Contractor shall submit a schedule analysis of all change order work with his proposal.

E. Cash Flow Projection - A cash flow projection shall be submitted with the Construction Schedule. This cash flow projection shall be revised and resubmitted when revisions of the Construction Schedule will result in changes to the projected cash flow.

3.02 TIME IMPACT ANALYSIS FOR CHANGES, DELAYS, TIME EXTENSIONS, AND CONTRACTOR REQUESTS

A. When change orders are initiated, delays are experienced or the Contractor, desires to revise the logic, the Contractor shall submit to the Engineer a written Time Impact Analysis illustrating the influence of each change, delay, or Contractor request on the current contract schedule completion date. Each Time Impact Analysis shall include a fragment (fragmentary network analysis) demonstrating how the Contractor proposes to incorporate the change order, delay, or Contractor request into the Detailed Network. The analysis shall demonstrate the time impact based on the date of occurrence of the change, delay, etc., the status of construction at the point in time, and the event time computation of all affected activities. The event times used in the analysis shall be those included in the latest update copy of the Detailed Network or as adjusted by mutual agreement.

B. Activity time delays will not automatically mean that an extension of contract time is warranted or due the Contractor. It is possible that a strike or contract modification will not affect existing critical activities or cause non-critical activities to become critical, i.e., a strike or modification may result in only absorbing a part of the available total float that may exist within an activity chain of the network, thereby not causing any affect on the contract completion date or time. Float or slack is not for the exclusive use of or benefit of the Owner, Engineer, or the Contractor. Extensions of time or performance will be granted only to the extent that the equitable time adjustments for the activity or activities affected exceeds the total float along the activity chain involved at the time the change was ordered or delay occurred.

C. Each Time Impact Analysis shall be submitted in triplicate and within fifteen (15) calendar days after a delay occurs or notice of direction for a change is given to the Contractor. In cases where the Contractor does not submit a Time Impact Analysis for a specific change order delay, or Contractor request within the specified period of time, then it is mutually agreed that particular change order, delay or Contractor request has no time impact on the contract completion date and no time extension is required. Approval or rejection of each Time Impact Analysis is by the Engineer and Owner and shall be made within fifteen (15) calendar days after receipt of each Time Impact Analysis unless subsequent meetings and negotiations are necessary. Upon approval, a copy of the time Impact Analysis signed by the Engineer and Owner will be returned to the Contractor. Upon mutual agreement by both parties, fragmentary network(s) illustrating the influence of change orders, delays, and/or Contractor requests will be incorporated into the detailed Network during the first update after agreement is reached.

End of Section

SECTION 01730 - OPERATING AND MAINTENANCE DATA

CONTENTS:

Part 1 - General 1

1.01 Work Included 1

1.02 Related Requirements 1

1.03 Reference Standards 1

1.04 Quality Assurance 1

1.05 Measurement And Payment 1

Part 2 - Products 2

Part 3 - Execution 2

3.01 Form Of Submittal 2

3.02 Content Of Manual 2

3.03 Manual For Materials And Finishes 4

3.04 Manual For Equipment And Systems 4

3.05 Submittal Schedule 7

3.06 Instruction Of City's Personnel 7

SECTION 01730 - OPERATING AND MAINTENANCE DATA

PART 1 - GENERAL

1.01 WORK INCLUDED

A. Compile product data and related information appropriate for City's maintenance and operation of products furnished under the Contract.

1. Prepare operating and maintenance data as specified in this Section and as referenced in other pertinent sections of Specifications.

B. Instruct City's personnel in the maintenance of products and in the operation of equipment and systems.

1.02 RELATED REQUIREMENTS

A. Section 01340, *"Submittals"*

B. Section 01720, *"Project Record Documents"*

C. Section 01740, *"Warranties & Bonds"*

1.03 REFERENCE STANDARDS

Not used

1.04 QUALITY ASSURANCE

A. Preparation of data shall be done by personnel:

1. Trained and experienced in maintenance and operation of the described products.

2. Completely familiar with requirements of this Section.

3. Skilled as a technical writer to the extent required to communicate essential data.

4. Skilled as a drafter competent to prepare required drawings.

1.05 MEASUREMENT AND PAYMENT

Not used

PART 2 - PRODUCTS

Not used

PART 3 - EXECUTION

3.01 FORM OF SUBMITTAL

A. Prepare data in the form of an instructional manual for use by City's personnel.

B. Format:

1. Size: 8-1/2 in. x 11 in.

2. Paper: Twenty pound (20#) minimum, white, for typed pages

3. Text: Manufacturer's printed data, or neatly typewritten

4. Drawings:

a. Provide reinforced punched binder tab, bind in with text.

b. Fold larger drawing to the size of the text pages.

5. Provide flyleaf for each separate product, or each piece of operating equipment.

a. Provide typed description of product, and major component parts of equipment.

b. Provide indexed tabs.

6. Cover: Identify each volume with typed or printed Title "OPERATING AND MAINTENANCE INSTRUCTIONS".

List:

a. Title of Project.

b. Identity of separate structure as applicable.

c. Identity of general subject matter covered in the manual.

C. Binders:

1. Commercial quality three-ring binders with durable and cleanable plastic covers.

3.02 CONTENT OF MANUAL

A. Neatly typed or printed table of contents for each volume, arranged in a systematic order.

1. Contractor, name of responsible principal, address and telephone number.

2. A list of each product required to be included, indexed to the content of the volume.

3. List, with each product, the name, address and telephone number of:

   a. Manufacturer and Supplier

   b. SubContractor or installer.

   c. Maintenance Contractor, as appropriate.

   d. Identify the source of responsibility of each.

   e. Local source of supply for parts and replacement.

4. Identify each product by product name and other identifying symbols as set forth in Contract Documents.

B. Product Data:

1. Include only those sheets that are pertinent to the specific product.

2. Annotate each sheet to:

   a. Clearly identify the specific product or part installed.

   b. Clearly identify the data applicable to the installation.

   c. Delete references to inapplicable information.

C. Drawings:

1. Supplement product data with drawings as necessary to clearly illustrate:

   a. Relations of component parts of equipment and systems.

   b. Control and flow diagrams.

2. Coordinate drawings with information on Project Record Documents to assure correct illustration of completed installation.

3. Do not use Project Record Documents as maintenance drawings.

D. Written text, as required to supplement product data for the particular installation:

1. Organize in a consistent format under separate headings for different procedures.

2. Provide a logical sequence of instructions for each procedure.

E. Copy of each warranty, bond and service contract issued.

1. Provide information sheet for City's personnel, give:

a. Proper procedures in the event of failure.

b. Instances which might affect the validity of warranties or bonds.

3.03 MANUAL FOR MATERIALS AND FINISHES

A. Contents, for architectural products, applied materials and finishes:

1. Manufacturer's data, giving full information on products:

a. Catalog number, size, and composition.

b. Color and texture designations.

c. Information required for re-ordering special manufactured products

2. Instruction for care and maintenance:

a. Manufacturer's recommendation for types of cleaning agents and methods.

b. Cautions against cleaning agents and methods, which are detrimental to the product.

c. Recommended schedule for cleaning and maintenance.

B. Contents, for moisture-protection and weather-exposed products:

1. Manufacturer's data, giving full information on products.

a. Applicable standards.

b. Chemical composition.

c. Details of installation.

2. Instructions for inspection, maintenance and repair.

C. Additional requirements for maintenance data: The respective Sections of Specifications.

D. Provide complete information for finished products or surfaces specified in each Section.

3.04 MANUAL FOR EQUIPMENT AND SYSTEMS

A. Contents, for each unit of equipment and system, as appropriate:

1. Description of unit and component parts.

    a. Function, normal operating characteristics, and limiting conditions.

    b. Performance curves, engineering data and tests.

    c. Complete nomenclature and commercial number of all replaceable parts.

2. Operating procedures:

    a. Start-up, break-in, routine and normal operating instructions.

    b. Regulation, control, stopping, shutdown and emergency instructions.

    c. Summer and winter operating instructions.

    d. Special operating instructions.

3. Maintenance procedures:

    a. Routine operations.

    b. Guide to "trouble-shooting".

    c. Disassembly, repair and reassembly.

    d. Alignment, adjusting and checking.

4. Servicing and lubricating schedule.

    a. List of lubricants required.

5. Manufacturer's printed operating and maintenance instructions.

6. Description of sequence of operation by control manufacturer.

7. Original manufacturer's parts list, illustrations, assembly drawings and diagrams required for maintenance.

    a. Predicted life of parts subject to wear.

    b. Items recommended to be stocked as spare parts, including recommended quantities to be maintained in storage.

8. As installed color-coded piping diagrams.

9. Each 's coordination drawings.

    a. As-installed color-coded piping diagrams.

10. Charts of valve tag numbers, with the location and function of each valve.

11. Other data as required under pertinent Sections of Specifications.

B. Contents, for each electric and electronic system, as appropriate:

1. Description of system and component parts.

   a. Function, normal operating characteristics, and limiting conditions.

   b. Performance curves, engineering data and test.

   c. Complete nomenclature and commercial number of replaceable parts.

2. Circuit directories of panel boards.

   a. Electrical service

   b. Controls

   c. Communications

3. As-installed color-coded wiring diagrams.

4. Operating procedures:

   a. Routine and normal operating instructions

   b. Sequences required

   c. Special operating instructions

5. Maintenance Procedures:

   a. Routine operations

   b. Guide to "Trouble-Shooting"

   c. Disassembly, repair and reassembly

   d. Adjustment and checking

6. Manufacturer's printed operating and maintenance instructions.

7. List of original manufacturer's spare parts, manufacturer's current prices, and recommended quantities to be maintained in storage.

8. Other data as required under pertinent Sections of Specifications.

C. Prepare and include additional data when the need for such data becomes apparent during instruction of City's personnel.

D. Additional requirements for operating and maintenance data under pertinent sections of Specifications.

E. Provide complete information for operating products and equipment specified in each Section, including security hardware.

3.05 SUBMITTAL SCHEDULE

A. Submit a minimum of three (3) copies of completed data in final form fifteen (15) working days prior to inspection for substantial completion.

B. The City will review the final operating and maintenance manual and other required submittals for completeness. The City will return one (1) set of the submittals with comments. The Contractor shall make modifications and the required corrections and resubmit a minimum of five (5) copies of the acceptable data in final form within ten (10) working days after receipt of the City's comments. Once the manual has been approved the Contract Closeout proceedings can be completed.

3.06 INSTRUCTION OF CITY'S PERSONNEL

A. Prior to the City's final inspection, provide one (1) full day of instruction (in addition to the number of days specified in other Sections of these Specifications) of the City's designated operating and maintenance personnel in the operation, adjustment and maintenance of all products, equipment and systems.

B. Operating and maintenance manual shall constitute the basis

1. Review contents of manual with personnel in full detail to explain all aspects of operations and maintenance.

End of Section

SECTION 01340 - SUBMITTALS

CONTENTS:

Part 1- General 1

1.01 Work Included 1

1.02 Related Requirements 1

1.03 Reference Standards 1

1.04 Quality Assurance 1

1.05 Measurement And Payment 1

Part 2 - Products 1

Part 3 - Execution 2

3.01 Submittal Schedule 2

3.02 Shop Drawings 2

3.03 Product Data 2

3.04 Samples 3

3.05 Contractor Responsibilities 3

3.06 Submission Requirements 4

3.07 Submittal Review Comments 5

3.08 Resubmission Requirements 6

3.09 Distribution 6

SECTION 01340 - SUBMITTALS

PART 1- GENERAL

1.01 WORK INCLUDED

A. Submit Shop Drawings, Product Data, Samples, and Warranties and Bonds required by Contract Documents.

1.02 RELATED REQUIREMENTS

A. Section 01310, *"Construction Schedule A"*

B. Section 01311, *"Construction Schedule B"*

C. Section 01410, *"Testing Laboratory Services"*

D. Section 01600, *"Material"*

E. Section 01640, *"Soils and Aggregates"*

F. Section 01720, *"Project Record Documents"*

G. Section 01730, *"Operating and Maintenance Data"*

H. Section 01740, *"Warranties and Bonds"*

1.03 REFERENCE STANDARDS

See Special Conditions if applicable to this Work.

1.04 QUALITY ASSURANCE

See Special Conditions if applicable to this work.

1.05 MEASUREMENT AND PAYMENT

See Special Conditions if applicable to this Work.

PART 2 - PRODUCTS

See Special Conditions if applicable to this Work.

PART 3 - EXECUTION

3.01 SUBMITTAL SCHEDULE

A. When so directed by the Engineer, within ten (10) working days after the contract award, the Contractor shall submit to the Engineer for review, eight (8) copies of a procurement and submittal schedule in accordance with the following guidelines:

1. All shop drawings, samples, product data, certificates, warranty, guarantee, and other items called to be submitted by the General and Technical portions of the Specifications shall be listed in the Schedule.

2. The Schedule shall indicate expected submission dates and shall allow for entering of dates actually submitted, forwarded to the Engineer, returned by the City, and returned to Contractor. It may allow for entry of date that submittals are to be forwarded to suppliers and sub-Contractors.

3. Schedule shall allow for entry of dates and remarks concerning resubmission.

4. Where submittals are reasonably expected to occur in stages (e.g., reinforcing steel), Schedule shall allow for separate entries.

5. For items of importance to the work, dates of fabrication and required delivery shall be entered. Note that the project schedules discussed in both Section 01310, "Construction Schedule A," and Section 01311, "Construction Schedule B," requires entry of important procurement activities.

6. A minimum of two copies of the Submittal Schedule will be returned to the Contractor within a reasonable time (not exceeding thirty (30) calendar days) from submission to the City. The submittal shall be returned marked in one (1) of the four (4) actions specified in Paragraph 3.07 of this Section.

3.02 SHOP DRAWINGS

A. Drawings shall be presented in a clear and thorough manner. Details shall be identified by reference to sheet and detail number as shown on the Contract Drawings.

3.03 PRODUCT DATA

A. Preparation:

1. Clearly mark each copy to identify pertinent products.

2. Show dimensions and clearances required.

3. Show performance characteristics and capacities.

4. Show piping or wiring diagrams and controls.

B. Manufacturer's standard drawings and diagrams:

1. Modify drawings and diagrams to delete information that is not applicable to the work.

2. Supplement standard information to provide information specifically applicable to the work.

3. Unless otherwise specified in the Special Provisions, submit a minimum of six (6) copies. A minimum of two (2) copies will be returned to the Contractor indicating City Review comments.

C. Certification:

1. Submit proper certification by recognized producer or association where specifically indicated in Contract Documents.

2. Certification attesting to product's compliance with requirement of Contract Documents.

3.04 SAMPLES

A. Office samples shall be sufficient size and quantity to clearly illustrate:

1. Functional characteristics of the product, with integrally related part and attachment device.

2. Full range of color, texture, and pattern.

B. Provide field samples at project at location acceptable to the City, as required by individual specification sections. Install each sample complete and finished. Acceptable finished samples in place may be retained in the completed work.

3.05 CONTRACTOR RESPONSIBILITIES

A. Review Shop Drawings, Product Data, and Samples prior to submission.

B. Determine and verify:

1. Field measurements.

2. Field construction criteria.

3. Catalog numbers and similar data.

4. Conformance with specifications.

C. Coordinate each submittal with requirements of the work and of the Contract Documents.

D. Notify the City in writing, by letter or transmittal and with marking on drawings, at time of submission, of any deviations in the submittals from requirements of the Contract Documents, in order that (if acceptable) suitable action may be taken for proper adjustment of Contract. Unless specific changes have been noted and accepted, there shall be no deviation from Contract Documents.

E. Begin no fabrication, procurement or work that requires submittals until return of submittals with the City's review and action required.

3.06 SUBMISSION REQUIREMENTS

A. Make submittals promptly in accordance with reviewed and approved Schedule, and in such sequence as to cause no delay in the work or in the work of any other Contractor.

B. Contractor shall submit a minimum of six (6) sets of each submittal for the City's review. The City will return at least two (2) copies of reviewed submittals to the Contractor after approval by the City. Product samples may be submitted in fewer quantities as approved by the Engineer.

C. Submittals shall contain:

1. The date of submission and the dates of any previous submissions. All submittals shall be numbered sequentially. Resubmittals shall maintain the original number with suffix R1, R2 etc added to the number.

2. The Project title and number.

3. Contract identification.

4. The names of:

   a. Contractor

   b. Supplier

   c. Manufacturer

5. Identification of the product, with the Specification Section number.

6. Field dimensions, clearly identified as such.

7. Relations to adjacent or critical features of the work or materials.

8. Applicable standards, such as ASTM, Federal or State Specification numbers.

9. Identification of deviations from Contract Documents.

10. Identification of revisions on resubmittals.

11. Sufficient blank space for City's review stamp.

3.07 SUBMITTAL REVIEW COMMENTS

A. After review by the Engineer of each of the Contractor's submissions, the material will be returned to the Contractor with actions defined as follows:

1. "NO EXCEPTIONS TAKEN" - Accepted subject to its compatibility with future submissions and additional partial submissions for portions of the work not covered in this submission. Does not constitute approval or deletion of specified or required items not shown in the partial submission.

2. "MAKE CORRECTIONS NOTED (NO RESUBMISSIONS REQUIRED)" - Same as "NO EXCEPTIONS TAKEN", except that minor corrections as noted shall be made by the Contractor.

3. "AMEND AND RESUBMIT" - Rejected because of major inconsistencies or errors which shall be resolved or corrected by the Contractor prior to subsequent review by the Engineer.

4. "REJECTED - RESUBMIT" - submitted material does not conform to the Plans and Specifications in major respect (i.e. wrong size, model, capacity, or material.)

B. These actions are interpreted as follows:

1. Items A.1 and A.2 above (no resubmittal required) are considered "favorable reviews." Items A.3 and A.4 above (correction and resubmittal required) are considered "unfavorable reviews."

2. It is considered reasonable that the Contractor shall make a complete and acceptable submission to the Engineer at least by the second submission of data. The City reserves the right to deduct monies from payments due the Contractor to cover additional costs of the Engineer's review beyond the second submission.

C. Favorable review by the Engineer will not constitute acceptance by the Engineer of any responsibility for the accuracy, coordination, and completeness of the Shop Drawings or the items of equipment represented on the Drawings. Accuracy, coordination, and completeness of the Shop Drawings shall be the sole responsibility of the Contractor, including the responsibility to back check comments, corrections and modifications from the Engineer's review before fabrication.

D. Shop Drawings shall not be used for procurement, fabrication, construction or installation unless submitted to, and favorably reviewed by the Engineer.

E. All Shop Drawings and supporting data, catalogs, schedules, etc. shall be submitted as the instruments of the Contractor, who shall be responsible for their accuracy and completeness. These submittals may be prepared by the Contractor, subContractors, or suppliers, but the Contractor shall ascertain that submittals meet all of the requirements of the Contract Documents, while conforming to structural, space, and access conditions at the point of installation. The Contractor shall check all submittals before submitting them to the Engineer and shall certify on the transmittal letter that they have been checked and are in compliance with the Plans and Specifications.

F. Acceptance by the Engineer of any drawings, method of work, or any information regarding materials and equipment the Contractor proposes to furnish shall not relieve the Contractor of his responsibility for any errors therein and shall not be regarded as an assumption of risks or liability by the Engineer or the Owner, or any officer or employee thereof, and the Contractor shall have no claim under the Contract on account of the failure or partial failure or inefficiency or insufficiency of any plan or method of work or material and equipment so accepted. Such acceptance shall be considered to mean merely that the Engineer has no objection to the Contractor using, upon his own full responsibility, the plan or method of work proposed, or furnishing the materials and equipment proposed.

G. It shall be the Contractor's responsibility to copy and/or conform reviewed Shop Drawings in sufficient numbers for his files, subContractors, and vendors.

3.08 RESUBMISSION REQUIREMENTS

A. Make any corrections or changes in the submittals required by the City and resubmit until accepted.

B. Shop Drawings and Product Data:

1. Revise initial data, and resubmit as specified for the initial submittal.
2. Indicate any changes that have been made other than those requested by the City.

C. Samples: Submit new samples as required for initial submittal.

3.09 DISTRIBUTION

A. Contractor shall distribute copies of Shop Drawings and Product Data which carry the City's stamp of review to:

1. Job site file
2. Record Documents file
3. SubContractors
4. Supplier or Fabricator

B. As applicable, distribute reviewed samples as directed by the City.

End of Section

SECTION 01410 - TESTING LABORATORY SERVICES

CONTENTS:

Part 1 - General 1

1.01 Work Included 1

1.02 Related Requirements 1

1.03 Reference Standards 1

1.04 Quality Assurance 1

1.05 Measurement And Payment 1

Part 2 - Products 1

Part 3 - Execution 2

3.01 Testing Laboratory Responsibilities 2

3.02 Contractor Responsibilities 2

SECTION 01410 - TESTING LABORATORY SERVICES

PART 1 - GENERAL

1.01 WORK INCLUDED

A. Procedures for obtaining the services of a qualified independent testing consultant.

1.02 RELATED REQUIREMENTS

A. Section 01340, *"Submittals"*

B. Section 01640, *"Soils and Aggregates"*

C. Section 02200, *"Earthwork"*

D. Section 03300, *"Minor Concrete"*

1.03 REFERENCE STANDARDS

Not used

1.04 QUALITY ASSURANCE

Not used

1.05 MEASUREMENT AND PAYMENT

A. On City-funded construction contracts, the City will employ and pay for the services of a qualified Independent Testing consultant to perform specified testing, except in the case of failed tests. The Contractor shall pay all costs for retesting.

B. On subdivision improvement projects and other non-City-funded contracts, the owner shall employ and pay for the services of a qualified independent testing firm as approved and required by the City Engineer.

PART 2 - PRODUCTS

Not used

PART 3 - EXECUTION

3.01 TESTING LABORATORY RESPONSIBILITIES

A. The testing consultant will perform soils compaction tests at the time and locations designated by the City.

B. The consultant will perform concrete cylinder strength tests as required by Section 03300.

C. The consultant will test representative samples of materials proposed to be used and which require testing as required by Section 02200, *"Engineered Fill,"* and Section 02500, *"Paving and Surfacing."*

D. The consultant will furnish eight (8) copies of products test reports as required by Section 01340, *"Submittals."*

3.02 CONTRACTOR RESPONSIBILITIES

A. Furnish incidental labor and facilities:

1. To provide access to work to be tested.

2. To obtain and handle samples at the Project Site or at the source of the product to be tested.

3. To coordinate sample handling with the testing consultant.

4. To facilitate inspections and tests.

End of Section

SECTION 01600 - MATERIAL

CONTENTS:

Part 1 - General 1

1.01 Work Included 1

1.02 Related Requirements 1

1.03 Reference Standards 1

1.04 Quality Assurance 1

1.05 Measurement And Payment 1

Part 2 – Products 2

Part 3 – Execution 2

3.01 Manufacturer's Instructions 2

3.02 Transportation And Handling 2

3.03 Storage And Protection 2

3.04 Substitution And Product Options 3

SECTION 01600 - MATERIAL

PART 1 - GENERAL

1.01 WORK INCLUDED

A. Material incorporated into the work:

1. Conform to applicable specifications and standards.

2. Comply with size, make, type and quality specified, or as specifically accepted in writing by the City.

3. Manufactured and Fabricated Products:

   a. Design, fabricate and assemble in accord with the best engineering practices.

   b. Manufacture like parts of duplicate units to standards sizes and gages, to be interchangeable.

   c. Two or more items of the same kind shall be identical, by the same manufacturer.

   d. Products shall be suitable for service conditions.

   e. Equipment capacities, sizes and dimensions shown or specified shall be adhered to unless variations are specifically accepted in writing.

4. Do not use material for any purpose other than that for which it is designed or is specified.

1.02 RELATED REQUIREMENTS

A. Section 01340, *"Submittals"*

1.03 REFERENCE STANDARDS

Not used

1.04 QUALITY ASSURANCE

Not used

1.05 MEASUREMENT AND PAYMENT

Not used

PART 2 – PRODUCTS

Not used

PART 3 – EXECUTION

3.01 MANUFACTURER'S INSTRUCTIONS

A. When Contract Documents require that installation of work shall comply with manufacturer's printed instructions, obtain and distribute copies of instructions to parties involved in the installation, including five (5) copies to the City. The City will not return any copies to the Contractor.

1. Maintain one set of complete instructions at the job site during installation and until completion.

B. Handle, install, connect, and adjust products in strict accord with such instructions and in conformity with specified requirements.

1. Should job conditions or specified requirements conflict with manufacturer's instruction, consult with the City for further instructions.

2. Do not proceed with work without written instructions.

C. Perform work in accord with manufacturer's instructions. Do not omit any preparatory step or installation procedure unless specifically modified or exempted by Contract Documents.

3.02 TRANSPORTATION AND HANDLING

A. Arrange deliveries of products in accord with construction schedules, coordinate to avoid conflict with work and conditions at the site.

1. Deliver products in undamaged condition, with identifying labels intact and legible.

2. Immediately on delivery, inspect shipment to assure compliance with requirements of Contract Documents and approved submittals, and that products are properly protected and undamaged.

B. Provide equipment and personnel to handle products by methods to prevent damage to products.

3.03 STORAGE AND PROTECTION

A. Store products in accord with manufacturer's instructions.

1. Store products subject to damage by the elements in weathertight enclosures.

2. Maintain temperature and humidity within the ranges required by manufacturer's instructions.

B. Exterior Storage:

1. Store fabricated products above the ground, on blocking skids, prevent soiling or staining.

2. Store loose granular materials in a well-drained area on solid surfaces to prevent mixing with foreign matter.

C. Arrange storage in a manner to provide easy access for inspection. Make periodic inspections of stored products to assure that products are maintained under specified conditions, and free from damage.

D. Protection after Installation

1. Provide substantial coverings as necessary to protect installed products form damage form traffic and subsequent construction operations. Remove when no longer needed.

3.04 SUBSTITUTION AND PRODUCT OPTIONS

A. Products List:

1. Submit to the City a complete list of products proposed to be used, with the name of the manufacturer and the installing subcontractor, as specified in Section 01340, *"Submittals."*

End of Section

SECTION 01720 - PROJECT RECORD DOCUMENTS

CONTENTS:

Part 1 – General 1

1.01 Work Included 1

1.02 Related Requirements 1

Part 2 - Products 1

Part 3 - Execution 1

3.01 Maintenance Of Documents And Samples 1

3.02 Marking Devices 2

3.03 Recording 2

3.04 Submittals 3

SECTION 01720 - PROJECT RECORD DOCUMENTS

PART 1 – GENERAL

1.01 WORK INCLUDED

A. Maintain at the site for the City one (1) record copy of:

1. Drawings, marked to indicate changes during construction
2. Specifications
3. Addenda
4. Change Orders and other modifications to the Contract
5. City's Field Orders or written instructions
6. Reviewed Shop Drawings, Product Data, and Samples
7. Field Test Records
8. Pertinent product operating and maintenance data

1.02 RELATED REQUIREMENTS

A. Section 01340, *"Submittals"*

B. Section 01600, *"Materials"*

C. Section 01730, *"Operating and Maintenance Data"*

PART 2 - PRODUCTS

Not used

PART 3 - EXECUTION

3.01 MAINTENANCE OF DOCUMENTS AND SAMPLES

A. The Contractor shall store documents and samples in Contractor's main office in a separate area apart from documents used for construction.

1. Provide files and racks for storage of documents.
2. Provide locked cabinet or secure storage space for storage of samples.

B. The Contractor shall maintain documents in a clean, dry, legible condition and in good order, and shall not use record documents for construction purposes.

C. The Contractor shall make documents and samples available at all times for inspection by the City, and shall bring documents and samples to the job site on demand.

3.02 MARKING DEVICES

A. The Contractor shall use colored pen or pencil for recording as-built information on record print set. Color(s) shall be designated by the City.

3.03 RECORDING

A. The Contractor shall:

1. Label each document "PROJECT RECORD" in neat large printed letters.

2. Record information concurrently with construction progress.

   a. Do not conceal any work until required information is recorded.

   b. Completely, accurately, and legibly record, to the satisfaction of the City, all deviations in construction, especially pipe and conduit locations, and any deviations caused by Change Orders.

   c. Locations and changes shall be done in a neat, legible manner and in accordance with the City's instructions. Use additional copies of prints, as necessary, to insure legible recording of data. The project record prints shall be available at the job site at all times.

B. Drawings - Legibly mark to record actual construction:

1. Depths of various elements of foundation in relation to finish first floor datum.

2. Horizontal and vertical locations of underground utilities and appurtenances referenced to permanent surface improvements.

3. Location of internal utilities and appurtenances concealed in the construction, referenced to visible and accessible features of the structure.

4. Field changes of dimension and detail.

5. Changes made by Change Order.

6. Changes made by verbal order(s) pending written change order(s) Change Order.

7. Details not on original Contract Drawings.

C. Specifications and Addenda - Legibly mark each Section to record:

1. Manufacturer, trade name, catalog number, and supplier of each product and item of equipment actually installed.

2. Changes made by Field Order or by Change Order.

3. Changes made by verbal order(s) pending written change order(s) Change Order.

D. Periodic payments to the Contractor may be withheld until the City verifies that all as-built information to date has been properly recorded on project record documents.

3.04 SUBMITTALS

A. At Contract closeout, deliver original Record Documents to the City.

B. Accompany submittal with transmittal letter, in duplicate, containing:

1. Date

2. Project title and number

3. Contractor's name and address

4. Title and number of each Record Document

5. Signature of Contractor or his authorized representative

End of Section

SECTION 02100 - CLEARING, GRUBBING AND SITE PREPARATION

CONTENTS:

Part 1- General 1

1.01 Work Included 1

1.02 Related Requirements 1

1.03 Reference Standards 1

1.04 Quality Assurance 1

1.05 Measurement And Payment 2

Part 2 - Products 2

Part 3 - Execution 2

3.01 Performance 2

SECTION 02100 - CLEARING, GRUBBING AND SITE PREPARATION

PART 1- GENERAL

1.01 WORK INCLUDED

A. Clearing the entire area within the limits of work of all rubbish, debris, and other objectionable material, and disposal of same.

B. Stripping the entire area within the limits of work of trees, shrubs, weeds, and other vegetative growth of any nature, and disposal of same as noted on the plans and specifications.

C. Grubbing the entire area within the limits of work of all roots and vegetative material to the full depth of the root system, and disposal of same.

D. Dust alleviation and control during the course of the work.

E. Any required abandonment of system facilities, including cutting, capping and slurry filling of abandoned pipelines.

F. Provision of all materials, equipment and apparatus not specifically mentioned herein or noted on the plans, but which are obviously necessary to complete the work specified.

G. Any required salvage of existing facilities.

1.02 RELATED REQUIREMENTS

Not used

1.03 REFERENCE STANDARDS

A. State Specifications

1.04 QUALITY ASSURANCE

A. All work under this section will be subject to the inspection and approval of both the Engineer and an approved geotechnical engineer registered in California.

B. The geotechnical engineer shall make enough visits to the site to insure ongoing familiarity with the progress and quality of the work. The geotechnical engineer shall make a sufficient number of field observations and tests to allow the forming of an opinion regarding the adequacy of the site preparation and the acceptability of the performance of work.

C. On City-funded Projects, services of the geotechnical engineer and/or testing laboratory shall be retained by, and paid for by the City. On all other projects, the geotechnical engineer and/or testing laboratory shall be retained by, and paid for by the developer. For City-funded Projects, any required geotechnical testing will be paid for by the City; however, testing or retesting caused by unsatisfactory contract operations shall be paid for by the Contractor.

D. The geotechnical engineer shall provide quality assurance reports as required and accepted by the Engineer.

1.05 MEASUREMENT AND PAYMENT

A. Clearing, grubbing, and stripping shall be paid for as bid, either in a Lump Sum basis or as shown on the Bid Schedule, which price includes full compensation for clearing, grubbing, and stripping the area specified, and loading, hauling and disposal of material resulting from the operations.

PART 2 - PRODUCTS

Not used

PART 3 - EXECUTION

3.01 PERFORMANCE

A. Clearing and grubbing shall be in accordance with applicable requirements of Section 16, *"Clearing and Grubbing,"* of the *State Specifications*, as amended below.

B. Ground cover of every nature, including trees, shrubs, weeds, and vegetation of any nature, shall be removed to the full depth of the root system.

C. Prior to any cutting or filling, the site shall be stripped to a sufficient depth to remove all vegetation and other deleterious materials. The minimum stripping depth shall be six inches (6"). The site shall be stripped to such greater depth, as the Engineer or the project geotechnical engineer may consider necessary to remove materials that, in their opinion, are unsatisfactory. The stripping material shall either be removed from the site or stockpiled for reuse later as topsoil where approved by the Engineer, but none of this stripped material may be used for engineered fill.

D. Where trees are removed, the soils loosened by the roots shall be over-excavated at least to the bottom of the disturbed zone and to the width of the equipment.

E. Spoil resulting from clearing, grubbing, and stripping operations shall be removed from the entire limits of work and properly disposed of by the Contractor.

F. Materials resulting from clearing, grubbing, and stripping operations shall become the property of the Contractor, to be properly removed from the work site and disposed of from the project site in a lawful manner, at no additional expense to the contract.

End of Section

SECTION 02200 - ENGINEERED FILL

CONTENTS:

Part 1 - General 1

1.01 Work Included 1

1.02 Related Requirements 1

1.03 Reference Standards 1

1.04 Quality Assurance 1

1.05 Measurement And Payment 2

1.06 Definition Of Terms 2

1.07 Site Conditions 3

Part 2 - Products 3

2.01 General 3

2.02 General Engineered Fill 3

2.03 Select Fill Material Beneath Floor Slabs 4

2.04 Geotechnical Report 4

Part 3 - Execution 4

3.01 General 4

3.02 Site Preparation 4

3.03 Placing And Compacting Fill Material 5

3.04 Excavation 6

3.05 Slope Repair 6

3.06 Buttress Fills 7

3.07 Treatment After Completion Of Grading 7

SECTION 02200 - ENGINEERED FILL

PART 1 - GENERAL

1.01 WORK INCLUDED

A. Site preparation

B. Placing and compacting fill material

C. Excavation

D. Slope repair

E. Buttress fill

F. Treatment after completion of grading

1.02 RELATED REQUIREMENTS

A. Section 02100, "Clearing, Grubbing, and Site Preparation"

B. Section 02210, "Site Grading"

C. Section 02410, "Subsurface Drains"

1.03 REFERENCE STANDARDS

A. State Specifications

1.04 QUALITY ASSURANCE

A. All work under this section will be subject to the inspection and approval of both the Engineer and an approved geotechnical engineer registered in California. Compaction testing either shall be performed by the geotechnical engineer or by a City approved independent testing laboratory under the supervision of a California registered geotechnical engineer.

B. The geotechnical engineer shall make enough visits to the site to insure ongoing familiarity with the progress and quality of the work. The geotechnical engineer shall make a sufficient number of field observations and tests to allow the forming of an opinion regarding the adequacy of the site preparation, the acceptability of the native or import fill material, and the extent to which the degree of compaction meets the specification requirements and the project needs.

C. Any fill where the site preparation, type of material, or compaction is not approved by the geotechnical engineer shall be removed and/or recompacted until the requirements are satisfied and approved by said geotechnical engineer. As required, fill material shall be tested for pollutants and certified for suitability by the geotechnical engineer.

D. On City-funded Projects, services of the geotechnical engineer and/or testing laboratory shall be retained by, and paid for by the City. On all other projects, the geotechnical engineer and/or testing laboratory shall be retained by, and paid for by the developer. For City-funded Projects, testing will be paid for by the City; however, testing or retesting caused by unsatisfactory contract operations shall be paid for by the Contractor.

E. The geotechnical engineer shall provide quality assurance reports as required and accepted by the Engineer.

1.05 MEASUREMENT AND PAYMENT

A. Engineered fill shall be paid for by the Lump Sum or on a unit cost based on the finished volume measured from the grade before and after, tonnage by weight slips, as shown on the Bid Schedule, which price includes full compensation for clearing and stripping the site material, if necessary; excavating, loading, hauling, depositing, spreading, and compacting the material in place within the area specified.

B. The above price and payment shall include full compensation for furnishing all labor, materials, tools, equipment and incidentals, and for doing all the work involved in obtaining and placing imported fill, complete in place, as shown on the plans and as specified and approved by the Engineer.

1.06 DEFINITION OF TERMS

A. ASTM Specifications: The latest volume of ASTM Standards (Part 19) of the American Society for Testing and Materials, latest revision.

B. Buttress Fill: Buttress fill is an engineered support structure with parameters based upon a slope stability analysis. The key width and depth, the buttress height and mass are designed by a geotechnical engineer to support a slope that has a potential for failure. Subdrains are necessary and the filter material shall be designed by the geotechnical engineer.

C. Degree of Compaction: The ratio, expressed as a percentage, of the dry density of the fill material as compacted in the field relative to the maximum dry density for the same material as determined by Test Method Number California 231-E or ASTM D 1557.

D. Engineered Fill: Engineered fill is a fill upon which the geotechnical engineer have made sufficient tests and observations to enable them to issue a statement that, in

their opinion, the fill has been placed and compacted in accordance with the specification requirements and to the satisfaction of the Engineer.

E. Fill: Fill is all soil or soil/rock materials placed to raise the grade of the site to finish grade.

F. Import Material: Material hauled in from off-site areas.

G. Maximum Laboratory Density: The maximum density of a given fill material that can be produced in the laboratory by the Standard Procedure ASTM D 1557, "Moisture-Density Relations of Soils Using 1 10-Pound (4.5 kg) Rammer and an 18-Inch (457 mm) Drop" (AASHTO Test T-180, "Moisture-Density Relations of Soils Using a 10-Pound Rammer and an 18-Inch Drop").

H. On-Site Material: Material obtained from the required excavations on the site.

I. Optimum Moisture Content: The moisture content at which the maximum laboratory density is achieved using the standard compaction procedure ASTM Test Designation D 1557 (AASHTO Test T-180).

J. Select Material: Soil material meeting the requirements set forth in these specifications.

K. Soils Report: A report prepared specifically for the project by a geotechnical engineer. The Soils Report shall be made a part of these specifications by reference.

1.07 SITE CONDITIONS

A. The Contractor shall be familiar with the soil conditions on the site, whether covered in the Soils Report or not, and shall thoroughly understand all recommendations associated with the grading. The Contractor shall obtain all necessary permits, including DOSH permits.

PART 2 - PRODUCTS

2.01 GENERAL

A. All fill material shall be in conformance with applicable requirements of Section 19, "Earthwork,"of the State Specifications. Imported material shall conform to the requirements for harmful contaminants test for pollutants.

2.02 GENERAL ENGINEERED FILL

A. All fill material must be approved by the geotechnical engineer. The material for fill shall be a soils or soil/rock mixture that is free from organic matter or other deleterious substances. The fill material shall not contain rocks or lumps over six inches (6") in greatest dimension, and not more than fifteen percent (15%) by dry weight shall be larger than two and one-half inches (2-1/2") in greatest dimension.

2.03 SELECT FILL MATERIAL BENEATH FLOOR SLABS

A. In addition to the requirements above, select material, when called for on the plans and for use under floor slabs, must conform to the following minimum requirements:

Maximum Plasticity Index 15

B. In addition to the requirements of "A", above, select material for use in buttress fills shall be non-plastic and shall have an "R" value of at least thirty (30). For non-traffic areas, the select material for buttress fills shall be approved by the geotechnical engineer.

2.04 GEOTECHNICAL REPORT

A. The geotechnical report for the project shall be made part of these specifications.

PART 3 - EXECUTION

3.01 GENERAL

A. Work done under this Section shall meet the applicable requirements of Section 19, "Earthwork," of the State Specifications. The Contractor shall cut, fill, import, or export materials as required to meet the lines and grades for subgrade or grade as shown on the plans.

3.02 SITE PREPARATION

A. After stripping, the areas to be filled shall be over-excavated to the minimum depth called for on the plans or that is required by the geotechnical engineer. The over-excavated soil that is clean and free from organic material can be used later as engineered fill. In general, the depth of over-excavation required in low areas of the site shall be two feet (2').

B. After stripping the surface vegetation and over-excavating to the required depths, the exposed surface shall be scarified to a minimum depth of six inches (6"), watered or aerated as necessary to bring the soil to a moisture content that will permit proper compaction, and compacted to the requirement of engineered fill as specified. Prior to placing fill, the Contractor shall obtain the geotechnical engineer's approval of the site preparation in the area to be filled.

C. All fills within thirty feet (30') of a fill slope, or where fills are placed on natural slopes inclined five (5) horizontal to one (1) vertical or steeper, shall be founded on natural undisturbed soil below the natural surface. An excavation shall be made at the toe of the fill slope to form a key having a width equal to the width of the equipment (as a minimum). The key shall be excavated a minimum depth of four feet (4') and into the underlying undisturbed rock or natural undisturbed soil, if approved by the geotechnical engineer. Excavations shall be made into the natural undisturbed soil to form level benches upon which to place the fill, as recommended in the geotechnical report.

D. Prior to placing the fill, subdrains, if required, shall be installed at the locations indicated in the geotechnical report and as directed by the geotechnical engineer. Subdrains shall be constructed as specified in Section 02410, "Subsurface Drains," of these specifications, and the extent of the subdrains shall be as directed by the geotechnical engineer.

3.03 PLACING AND COMPACTING FILL MATERIAL

A. All fill material shall be compacted as specified or by other methods, if approved by the geotechnical engineer, to produce a minimum degree of compaction of ninety percent (90%). Fill material shall be spread in uniform lifts not exceeding eight inches (8") in thickness. Before compaction begins, the fill shall be brought to a water content that will permit proper compaction by either aerating the material if it is too wet, or spraying the material with water if it is too dry. Each lift shall be thoroughly mixed before compaction to ensure a uniform distribution of water content.

1. Lift thickness requirements may be modified by the geotechnical engineer to suit equipment and materials or other conditions when required to assure satisfactory compaction.

2. Moisture-condition fill material by aerating or watering and thoroughly mix material to obtain moisture content permitting proper compaction.

3. Place and compact each layer of fill to indicated density before placing additional fill material. Repeat filling until proposed grade, profile, or contour is attained.

4. Suspend fill operations when satisfactory results cannot be obtained because of environmental or other unsatisfactory site conditions. Do not place fill material on muddy or frozen subgrade surface.

5. Maintain surface conditions which permit adequate drainage of rainwater and prevent ponding of surface water in pockets. When fill placement is interrupted by rain, remove wet surface materials or permit to dry before placing additional fill material.

B. Place backfill material in uniform layers not greater than eight inches (8") loose thickness over entire backfill area.

1. Use hand tampers or vibrating compactors at foundation walls, retaining walls, and similar locations. Do not use large rolling equipment adjacent to foundation walls and retaining walls.

2. Do not backfill against foundation walls or retaining walls until walls for bearing surfaces have reached design strength or are properly braced, and backfilling operations approved. Provide clean backfill materials or granular materials as required. Compact in maximum eight-inch (8") layers.

C. Fill all areas of settlement to proper grade before subsequent construction operations are performed.

D. Compaction

1. Provide compaction control and request testing and inspection of all fill and backfill.

2. Unless specifically approved by the Engineer, water settling, puddling, and jetting of fill and backfill materials, as a compaction method is not acceptable.

3. Maintain moisture content of materials during compaction operations within required moisture range to obtain indicated compaction density.

4. Provide adequate equipment to achieve consistent and uniform compaction of fill and backfill materials.

3.04 EXCAVATION

A. All excavation shall be carefully made true to the grades and elevations shown on the plans. The excavated surfaces shall be properly graded to provide positive drainage during construction and to prevent ponding of water.

3.05 SLOPE REPAIR

A. Where slide areas are to be repaired, the entire slide mass shall be excavated to a depth below the slide plane and to a depth where undisturbed rock is encountered. The depth of the excavation shall be approved by the geotechnical engineer. After the slide mass has been completely removed to the approved depth, the exposed material shall be keyed and benched as specified and the subdrains shall be installed as directed by the geotechnical engineer and as specified in the subdrain specifications. When this is done, the excavations shall be backfilled with engineered fill compacted in accordance with this specification.

3.06 BUTTRESS FILLS

B. Where buttress fills are to be constructed, a key shall be excavated below the toe of the planned slope to the design depth as shown on the plans or where strong, undisturbed soil is encountered. The final depth of the excavations shall be approved by the geotechnical engineer. The key shall extend back horizontally for the minimum specified distance or until strong rock is encountered. Where strong rocks form level surfaces upon which to place the fill, the exposed surfaces shall be scarified and recompacted as described.

C. Subdrains shall be installed as directed by the geotechnical engineer and as specified in the specifications for subsurface drains. When this is done, the excavation shall be backfilled with engineered fill compacted in accordance with these specifications. Typical buttress fill shall be constructed as shown on the detail plans and at location shown on the site plan presented by the geotechnical engineer.

3.07 TREATMENT AFTER COMPLETION OF GRADING

A. After grading is completed and the geotechnical engineer has finished observation of the work, no further excavation or filling shall be performed.

B. It shall be the responsibility of the Contractor to prevent erosion of freshly graded areas during construction and until permanent drainage and erosion control measures have been installed.

End of Section

SECTION 02210 - SITE GRADING

CONTENTS:

Part 1 - General 1

1.01 Work Included 1

1.02 Related Requirements 1

1.03 Reference Standards 1

1.04 Quality Assurance 1

1.05 Measurement and Payment 2

1.06 Soils Report 2

1.07 Soils Borings 3

1.08 Project Conditions 3

1.09 Existing Conditions 3

Part 2 - Products 3

2.01 Requirements For General Engineered Fill 3

Part 3 - Execution 3

3.01 Preparation 3

3.02 Existing Utilities 4

3.03 Site Grading 4

3.04 Excavating 5

3.05 Drainage 5

3.06 Filling, Backfilling, and Compacting 5

3.07 Testing 5

3.08 Field Quality Control 6

3.09 Protection 6

3.10 Disposal of Waste Material 6

3.11 Maintenance 6

SECTION 02210 - SITE GRADING

PART 1 - GENERAL

1.01 WORK INCLUDED

A. Rough and finish grading of site.

B. Dust alleviation and control.

C. Cleanup and disposal of excess material.

D. Provision of all material, equipment, and apparatus not specifically mentioned herein or noted on the plans, but which are obviously necessary to complete the work specified.

E. The Contractor shall be familiar with the soil conditions on the site, whether covered in the Soils Report or not, and shall thoroughly understand all recommendations associated with the grading.

F. The Contractor shall obtain a permit from the State Department of Industrial Relations, Division of Safety and Health (DOSH) for trenches or excavations five feet (5') deep or deeper. The Contractor shall submit a copy of the permit to the Engineer prior to initiating any work requiring such permit.

G. The Contractor shall comply with erosion control measures to prevent run-off of sediment and other unsuitable materials to the storm drain system.

1.02 RELATED REQUIREMENTS

A. Section 01410, *"Testing Laboratory Services"*

B. Section 02200, *"Engineered Fill"*

1.03 REFERENCE STANDARDS

A. State Specifications.

B. American Society for Testing and Materials (ASTM).

1.04 QUALITY ASSURANCE

A. All work under this section will be subject to the inspection and approval of both the Engineer and an approved geotechnical engineer registered in California. Compaction testing either shall be performed by the geotechnical engineer or by a City approved independent testing laboratory under the supervision of a California registered geotechnical engineer.

B. The geotechnical engineer shall make enough visits to the site to insure ongoing familiarity with the progress and quality of the work. The geotechnical engineer shall make a sufficient number of field observations and tests to allow the forming of an opinion regarding the adequacy of the site preparation, the acceptability of the native or import fill material, and the extent to which the degree of compaction meets the specification requirements and the project needs.

C. Any fill where the site preparation, type of material, or compaction is not approved by the geotechnical engineer shall be removed and/or recompacted until the requirements are satisfied and approved by said geotechnical engineer. As required, fill material shall be tested for pollutants and certified for suitability by the geotechnical engineer.

D. On City-funded Projects, services of the geotechnical engineer and/or testing laboratory shall be retained by, and paid for by the City. On all other projects, the geotechnical engineer and/or testing laboratory shall be retained by, and paid for by the developer. For City-funded Projects, testing will be paid for by the City; however, testing or retesting caused by unsatisfactory contract operations shall be paid for by the Contractor.

E. The geotechnical engineer shall provide quality assurance reports as required and accepted by the Engineer.

F. Finish surface of the site shall not vary more than one tenth of a foot (0.10') from that called for on the plans or detail drawings.

G. Percentage of compaction specified shall be the minimum acceptable. Unless otherwise specified, 90% will be the minimum acceptable. The percentage represents the ratio of the dry density of the compacted material to the maximum dry density of the material, as determined by the procedure set forth in ASTM Designation D 1557.

1.05 MEASUREMENT AND PAYMENT

A. Except as otherwise provided, site grading shall be paid for in accordance with Sections 19, *"Earthwork,"* of the *State Specifications*. Earthwork/site grading shall be paid for as bid, either in a lump sum or based on cubic yardage measured in place by the approved surveying methods.

B. Contractors intending to use City water shall make arrangements with the City's Finance Department for metered connections and shall pay for all water at City rates, plus the required meter deposit.

1.06 SOILS REPORT

A. A soil investigation report may have been prepared for the project. Unless otherwise specified, it is intended that all earthworks be performed in accordance with the provisions of the report.

1.07 SOILS BORINGS

A. Subsurface soil investigations may have been made at the site and if so, logs of the test holes are available with the Soils Report. Such investigations have been made for the purposes of design only and neither the Engineer nor the geotechnical engineer guarantee adequacy or accuracy of the data, or that data are representative of all conditions to be encountered. Such information is made available for general information only and shall not relieve the Contractor of the responsibility for making his own investigations.

1.08 PROJECT CONDITIONS

A. Protect excavations by shoring, bracing, sheeting, underpinning, or other methods as required, to prevent cave-ins or loose dirt from entering excavations. Barricade open excavations and post warning lights at work adjacent to public streets and walks.

B. Underpin adjacent structure(s), including utility service lines, which may be damaged by excavation operations.

C. Promptly repair damage to adjacent facilities caused by earthwork operations. Cost of repair shall be at the Contractor's expense.

D. Promptly notify the Engineer of unexpected subsurface conditions.

1.09 EXISTING CONDITIONS

A. If a topographic survey of the property has been included in the drawings, it is for reference only. Upon beginning the earthwork, the Contractor represents that he has inspected the site and has satisfied himself as to actual grades and levels and the true conditions under which the work is to be performed.

PART 2 - PRODUCTS

2.01 REQUIREMENTS FOR GENERAL ENGINEERED FILL

A. All fill material shall be approved by the Engineer. All work shall conform with the applicable requirements of Section 02200, *"Engineered Fill,"* of these specifications and Section 19, *"Earthwork,"* of the *State Specifications*.

PART 3 - EXECUTION

3.01 PREPARATION

A. Verify existing subgrades as shown on the drawings. Designate and identify datum elevation and project engineering reference points. Set required lines, levels, and elevations.

B. Do not cover or enclose work before obtaining required inspections, tests, approvals, and location recording.

3.02 EXISTING UTILITIES

A. Before starting grading and excavation, establish the location and extent of underground utilities in the work area. Exercise care to protect existing utilities during earthwork operations. Perform excavation work near utilities by hand and provide necessary shoring, sheeting, and supports as the work progresses.

B. The existing utility lines to remain passing through the work area shall be maintained, protected, relocated or extended, as required.

C. Protect active utility services uncovered by excavation.

D. Remove abandoned utility service lines from areas of excavation. Cap, plug, or seal abandoned lines and identify termination points at grade level with markers.

E. Accurately locate and record abandoned and active utility lines rerouted or extended on project record documents.

3.03 SITE GRADING

A. Perform grading within contract limits, including adjacent transition areas, to new elevations, levels, profiles, and contours indicated. Provide uniform levels and slopes between new elevations and existing grades.

B. Grade surfaces to assure areas drain away from structures and to prevent ponding and pockets of surface drainage. Provide subgrade surfaces free from irregular surface changes and as follows:

1. Rough Grading: Plus or minus one tenth of a foot (0.10') subgrade tolerance. Finish required will be that ordinarily obtained from either blade-grader or scraper operations.

2. Subgrade: Provide subgrade surface free of exposed boulders or stones exceeding four inches (4") in greatest dimension in paved areas; two inches (2") in planting areas; one inch (1") in lawn areas.

3. Paved Areas: Shape surface of subgrade areas to line, grade, and cross-section indicated. Provide compacted subgrade suitable to receive paving base materials. Subgrade tolerance plus zero inches (+ 0"), minus one-half inch (- 1/2").

4. Granular Base: Grade subgrade surface smooth and even, free of voids to the required subgrade elevation. Provide compacted subgrade suitable to receive granular base materials. Tolerance one-half inch (1/2") in ten feet (10').

5. Drainage Swales: Grade to profiles indicated.

3.04 EXCAVATING

A. Excavate to elevations and dimensions shown. Remove loose, soft materials, and all organic matter. Existing concrete walks shall bear on approved undisturbed bearing soil.

B. Earth excavation shall include the satisfactory removal and disposal of all materials encountered, regardless of the nature of the materials, the condition of the materials at the time they are excavated, or the manner in which they were excavated, except materials classified as rock excavation.

C. Excavate unsatisfactory soil materials extending below required elevations to depth as directed. Such extra excavation will be paid for as a change in work. Obtain Engineer's written authorization before performing extra excavation work.

D. Shore, sheet, or brace excavations as required to maintain securely. Remove shoring and bracing as backfilling progresses, when banks are safe against caving.

E. Do not excavate footings or slabs to the full depth when freezing temperature may be expected, unless footings or slabs are placed immediately after the excavation has been completed. Protect excavation bottoms from freezing when the placing of concrete is delayed.

3.05 DRAINAGE

A. Provide necessary pumps and drainage lines and maintain excavations, including footings and pits, free from water during excavating and subsequent work operations.

B. Provide drainage of the working area at all times.

3.06 FILLING, BACKFILLING, AND COMPACTING

A. All work shall conform to Section 02200, *"Engineered Fill,"* of these specifications.

B. Obtain Engineer's inspection and approval of subgrade surfaces prior to filling operations. Scarify, dry, and compact soft and wet areas; remove and replace unsuitable subgrade materials with an approved compacted fill material. Take correct measures before placing fill materials.

3.07 TESTING

A. Testing and inspection shall be performed by a qualified independent testing laboratory, under the supervision of a registered professional engineer specializing in geotechnical engineering.

B. The City or the Developer shall provide and pay for testing and inspection during earthwork operations, except as noted in the Special Provisions of these specifications.

3.08 FIELD QUALITY CONTROL

A. Provide field quality control soils testing and inspection during earthwork operations.

B. Contractor shall provide adequate notice, cooperate with, provide access to the work, obtain samples, and assist testing agency and their representatives in execution of their function.

C. Test proposed fill materials to verify suitability for use, gradation of material, moisture-density relation, design bearing value, and percent of organic materials.

D. When, during progress of work, field tests indicate that installed compacted materials do not meet specified requirements, provide additional compaction until specified density is achieved, or remove and replace defective materials with new materials as directed by the Engineer. Cost of additional labor, materials, and testing to attain specified density shall be at the Contractor's expense.

3.09 PROTECTION

A. Furnish, place, and maintain all supports, shoring, and sheet piling which may be required for the sides of the excavation or for protection of adjacent existing improvements.

B. Maintain all benchmarks, monuments, and other reference points. If disturbed or destroyed, replace as directed.

3.10 DISPOSAL OF WASTE MATERIAL

A. Stockpile, haul from site, and legally dispose of waste materials, including excess excavated materials, rock, trash, and debris.

3.11 MAINTENANCE

A. Protect graded areas from traffic and erosion. Keep free of trash and debris. Repair and re-establish grades in settled, eroded, and damaged areas.

B. Where completed areas are disturbed by construction operations or adverse weather, scarify, reshape, and compact to required density.

End of Section

SECTION 02400 - STORM DRAIN SYSTEM

CONTENTS:

Part 1 - General 1

1.01 Work Included 1

1.02 Related Requirements 1

1.03 Reference Standards 1

1.04 Quality Assurance 1

1.05 Measurement And Payment 2

Part 2 - Products 3

2.01 Concrete 3

2.02 Mortar 3

2.03 Precast Concrete Manholes 3

2.04 Reinforcing Bar 3

2.05 Catch Basin Frames And Grates 3

2.06 Precast Catch Basins And Drop Inlets 3

2.07 Reinforced Concrete Pipe 3

2.08 Corrugated Metal Pipe 4

2.09 Manhole Frames And Covers 4

2.10 Plastic Pipe 4

2.11 Backfill Materials 4

Part 3 - Execution 4

3.01 Catch Basins And Drop Inlets 4

3.02 Concrete Structures 5

3.03 Storm Drain Manholes 5

3.04 Pipe Connection 5

3.05 Reinforced Concrete Pipe 5

3.06 Corrugated Metal Pipe 5

3.07 Excavation And Backfill 5

3.08 Subsurface Drains 6

3.09 Plastic Pipe 6

3.10 Testing 6

3.11 Setting Manhole Frames And Covers To Grade 6

3.12 Abandonment of Storm Drain Pipes and Manholes 7

SECTION 02400 - STORM DRAIN SYSTEM

PART 1 - GENERAL

1.01 WORK INCLUDED

Work on this project includes, but is not limited to, the following:

A. Constructing storm drain manholes and catch basins with frames and covers, as indicated on the plans and specified herein.

B. Modifying existing storm drain manholes as shown on the plans and specified herein.

C. Installing new storm drain structures and junction boxes as shown on the plans and specified herein.

D. Furnishing, installing, and connecting storm drain pipes and appurtenances as shown on the plans and specified herein.

1.02 RELATED REQUIREMENTS

A. Section 02221, *"Trench Excavation and Backfill"*

B. Section 02500, *"Paving and Surfacing"*

C. Section 03300, *"Minor Concrete"*

1.03 REFERENCE STANDARDS

A. State Specifications

B. American Society for Testing and Materials (ASTM)

1.04 QUALITY ASSURANCE

The Contractor's attention is directed to Article 8 of the City's General Conditions (Section 00700). To validate that specified final elevations have been provided, the Contractor shall provide to the City applicable grade certificates as required by Article 8. No separate payment will be made for providing such certification; all cost therefore shall be included in the payment for various work item(s) requiring certification.

1.05 MEASUREMENT AND PAYMENT

Separate payment shall not be made for single items unless specifically noted.

A. Catch Basins

1. Catch basins shall be measured and paid for at the unit price bid, which price shall include full compensation for excavation, backfill, rebar, concrete, frames and grates, pavement replacement, and all incidental work and services involved in the construction of the completed structure.

B. Manholes

1. Manholes including frames and covers shall be measured and paid for at the unit price bid, which price shall include full compensation for excavation, backfill, rebar, concrete, castings, pavement replacement, and all incidental work and services involved in the construction of the completed structure.

C. Manhole Modification

1. Manhole modification shall be measured and paid for at the unit price bid, which price shall include full compensation for excavation, backfill, rebar, concrete, pavement replacement, and all incidental work and services involved in the construction of the completed structure.

D. Storm Drain Structures and Junction Boxes

1. Storm drain structures and junction boxes shall be paid for at the unit price bid, which price shall include full compensation for excavation, backfill, castings, forms, concrete, rebar, pavement replacement, and all incidental work and services involved in the construction of the completed structure.

E. Pipes

1. Pipes shall be measured and paid for per Linear Foot for the different sizes and classes of pipes, as listed on the Bid Schedule.

2. Payment shall include full compensation for furnishing all labor, materials, tools, equipment and incidentals for doing all work involved in installing different sizes, classes, and types of pipe, complete in place, including trenching, excavation and backfill, and connecting new pipe to existing or new facilities, concrete collars, or concrete tees and reinforcements, as shown on the plans and as specified in these specifications and Special Provisions, and as directed by the Engineer.

PART 2 - PRODUCTS

2.01 CONCRETE

A. Concrete shall conform to Section 03300, *"Minor Concrete,"* of these specifications.

2.02 MORTAR

A. One part Portland Cement and two parts sand by volume, conforming to Section 65-1.06A, *"Cement Mortar,"* of the *State Specifications*.

2.03 PRECAST CONCRETE MANHOLES

A. Precast storm drain manholes shall conform to Section 70-1.02H, *"Precast Concrete Structures,"* of the *State Specifications*. Storm drain precast manhole sections shall be jointed by sealing compounds like "RAM-NEK" or "ADEKA ULTRA SEAL".

2.04 REINFORCING BAR

A. Reinforcing bars shall conform to Section 03300, *"Minor Concrete,"* of these specifications.

2.05 CATCH BASIN FRAMES AND GRATES

A. Frames and grates for catch basins shall be fabricated from structural steel conforming to ASTM A36, galvanized, and in accordance with Section 75, *"Miscellaneous Metals,"* of the *State Specifications* and *applicable City Standard Drawings*.

2.06 PRECAST CATCH BASINS AND DROP INLETS

A. For alternate construction, Contractor may use precast drainage box like "CHRISTY" U43, or "SANTA ROSA" Type G0, or approved equal.

2.07 REINFORCED CONCRETE PIPE

A. Reinforced Concrete Pipe (RCP) shall be manufactured in conformance with ASTM C76 and other applicable provisions of ASTM C361, with rubber-gasketed compression joints. The joints shall be all concrete bell and spigot type using a round O-ring rubber gasket seal. Upon closure of the joint, the gasket shall be self-contained and compressed in a groove on the spigot end of the pipe. Mortared joints will not be acceptable. At all times, plant facilities will be made available for

the Engineer's inspection. In any case, all required testing and certifications of testing compliance in conformance with referenced ASTM Specifications shall be furnished to the Engineer prior to the time of pipe delivery. Pipe may be made by centrifically spun, packerhead or vertically cast production methods. Machine tamped production methods will not be acceptable. If elliptically reinforced pipe is furnished, it shall be clearly marked for proper installation. Unless otherwise specified in the Special Provisions or shown on the Plans, provide pipe Class III.

2.08 CORRUGATED METAL PIPE

A. Shall be corrugated aluminum pipe, conforming to applicable provisions of Section 66-2, *"Corrugated Aluminum Pipe,"* of the *State Specifications*.

2.09 MANHOLE FRAMES AND COVERS

A. Manhole frames and covers shall be Phoenix Model P-1090, as manufactured by Phoenix Iron Works, Second and Castro Streets, Oakland, California 94604, or approved equal, and stamped "STORM DRAIN."

2.10 PLASTIC PIPE

A. Plastic pipe shall not be used within the City's or public right of way, except as approved by the Engineer.

B. Plastic pipe shall be polyvinyl chloride (PVC) of the types and classifications shown on the plans and shall conform to applicable requirements of ASTM D 2241, *"Bell-End Poly (Vinyl Chloride) (PVC) Pipe"*, ASTM D 2672, *"Poly (Vinyl Chloride) (PVC) Pressure-Rated Pipe (SDR Series)"*, and ASTM D 3139, *"Joints For Plastic Pressure Pipes Using Flexible Elastomeric Seals."*

2.11 BACKFILL MATERIALS

A. Shall be as specified under Section 02221 of these Specifications, the Special Provisions and applicable City Standard Drawings.

B. Initial backfill material for ground areas saturated by water shall be granular material, clean and free of clay, silt or organic matter, and shall be Class 1, Type B, conforming to the requirements of Section 68-1.025, "Permeable Material," of the State Specifications.

PART 3 - EXECUTION

3.01 CATCH BASINS AND DROP INLETS

A. Catch basins and drop inlets shall be constructed at the location and of the type indicated on the plans and shall be verified on the site by the Contractor.

B. They shall be concrete structures and shall be fitted with frames and grates, as shown on applicable City Standard Drawings for the specified type of structure.

C. Upon completion, in accordance with City Standards, curbs adjacent to the catch basin shall be labeled with "No Dumping; Flows to Ocean/Bay"

3.02 CONCRETE STRUCTURES

A. The concrete structures shall be either cast in place or precast units and shall be installed in conformance with Section 03300, *"Minor Concrete,"* of these specifications. Concrete structures shall not be plastered.

3.03 STORM DRAIN MANHOLES

A. Manholes shall be constructed at the location and of the type indicated on the plans.

B. They shall be precast concrete units conforming to Section 70-1.02H, "*Precast Concrete Structures*", of the *State Specifications*, and constructed in accordance with *applicable City Standard Drawings*.

3.04 PIPE CONNECTION

A. Pipe connection to existing manhole shall be made in such a manner that the finish work conforms to the applicable requirements specified for new manholes, including all necessary concrete work, cutting and shaping.

3.05 REINFORCED CONCRETE PIPE

A. The reinforced concrete pipe shall be laid in accordance with Section 65-1.07, *"Laying Pipe,"* of the *State Specifications*.

3.06 CORRUGATED METAL PIPE

A. Corrugated metal pipe shall be laid in accordance with Section 66-1.05, "*Laying Pipe,*" of the *State Specifications*.

3.07 EXCAVATION AND BACKFILL

A. Excavation and backfill shall be as specified in Section 02221 of these Specifications and applicable City Standard Drawings.

B. All pipe materials and accessories shall be on site prior to excavation. Unless otherwise specifically approved by Engineering/DWWR, the length of open trench shall not exceed 100 ft. ahead of pipelaying and no more than 25 ft. of excavated trench shall remain unbackfilled at end of day.

Excavations in public streets shall be coordinated so as to minimize traffic interference. Trenching in paved areas shall be saw cut or scored and broken ahead of trenching operations and shall be cut or trimmed to a neat edge after backfilling. Any pavement damaged outside of the cuts shall be saw cut and restored prior to final paving.

C. Roots four inches (4") or greater found during excavation shall be exposed but not severed and shall be wrapped in burlap to protect them while exposed. Roots two to four inches (2"-4") in diameter that are severed in the course of construction shall be neatly trimmed and coated with a heavy coat of tree seal. In the event major roots of smaller trees are damaged or severed the engineer may require the contractor to consult with a qualified arborist to determine the proper method to protect the trees.

Trenches must be kept free from water while the pipe or structures are being installed, concrete is setting and until backfill has progressed to a sufficient height to anchor the work against possible flotation or leakage.

3.08 SUBSURFACE DRAINS

A. Subsurface drains shall be tied to drain inlets or manholes as shown on the Plans.

3.09 PLASTIC PIPE

A. Except in street and driveway areas, plastic pipe shall be in accordance with applicable requirements of ASTM D 2241, ASTM D 2672, and ASTM D 3139.

3.10 TESTING

A. The Contractor shall perform a video inspection of the piping system and shall furnish the City with a copy of the video.

B. The Contractor shall have all storm drain lines cleared by either mechanical or hydraulic balling before a video inspection is performed. A screen trap shall be installed at the downstream manhole of the line to be cleared to prevent debris from entering existing mains.

C. The Contractor shall pay for all associated testing costs except for City-funded projects.

D. All defects and leaks noted shall be corrected by the Contractor to the satisfaction of the Engineer.

3.11 SETTING MANHOLE FRAMES AND COVERS TO GRADE

A. All manhole castings shall be raised to new grade by bricks, and mortar and/or Pre-Cast Grade Rings in compliance with these specifications, as outlined for a new casting, after street paving has been replaced.

3.12 ABANDONMENT OF STORM DRAIN PIPES AND MANHOLES

A. Twelve-inch (12") and larger storm drain pipes to be abandoned shall be plugged and filled with slurry mixture containing a minimum of two (2) sacks of Type II cement per cubic yard of mixture.

B. Filling with slurry shall be accomplished by pumping or gravity, and will be checked by comparing the volume of the pipe with the volume of mixture used. If the volume is more than 10 percent (10%) greater than the actual volume of slurry used, the Contractor shall excavate two (2) or more exploratory holes where directed by the Engineer, and shall do all work necessary to satisfactorily fill any encountered voids.

C. Ten-inch (10") and smaller pipes to be abandoned shall be plugged at both ends with mortar not less than six inches (6") or by a tight brick wall with cement mortar joints not less than eight inches (8") thick.

D. Manholes to be abandoned shall have their cones removed, backfilled with slurry, or native material compacted to ninety-five (95%) relative compaction. Frames and covers not to be reused shall be delivered to the City as directed by the Engineer.

End of Section

SECTION 02220 - ROADWAY SUBGRADE PREPARATION

CONTENTS:

Part 1 - General 1

1.01 Work Included 1

1.02 Related Requirements 1

1.03 Reference Standards 1

1.04 Quality Assurance 1

1.05 Measurement and Payment 2

Part 2 - Products 2

Part 3 - Execution 2

3.01 Subgrade Preparation 2

SECTION 02220 - ROADWAY SUBGRADE PREPARATION

PART 1 - GENERAL

1.01 WORK INCLUDED

A. Finish grading of roadway subgrade and subgrade preparation.

B. Dust alleviation and control.

C. Cleanup and disposal.

D. Provision of all materials, equipment, and apparatus not specifically mentioned herein or noted on the plans, but which are obviously necessary to complete the work specified.

1.02 RELATED REQUIREMENTS

A. Section 02210, *"Site Grading"*

1.03 REFERENCE STANDARDS

A. State Specifications

B. American Society for Testing and Materials (ASTM)

1.04 QUALITY ASSURANCE

A. All work under this section will be subject to the inspection and approval of both the Engineer and an approved geotechnical engineer registered in California. Compaction testing either shall be performed by the geotechnical engineer or by a City approved independent testing laboratory under the supervision of a California registered geotechnical engineer.

B. The geotechnical engineer shall make enough visits to the site to insure ongoing familiarity with the progress and quality of the work. The geotechnical engineer shall make a sufficient number of field observations and tests to allow the forming of an opinion regarding the adequacy of the site preparation, the acceptability of the native or import fill material, and the extent to which the degree of compaction meets the specification requirements and the project needs.

C. Any fill where the site preparation, type of material, or compaction is not approved by the geotechnical engineer, shall be removed and/or recompacted until the requirements are satisfied and approved by said geotechnical engineer. As required, fill material shall be tested for pollutants and certified for suitability by the geotechnical engineer.

D. On City-funded Projects, services of the geotechnical engineer and/or testing laboratory shall be retained by, and paid for by the City. On all other projects, the geotechnical engineer and/or testing laboratory shall be retained by, and paid for by the developer. For City-funded projects, testing will be paid for by the City; however, testing or retesting caused by unsatisfactory contract operations shall be paid for by the Contractor.

E. The geotechnical engineer shall provide quality assurance reports as required and accepted by the Engineer.

F. Finish surface of the prepared subgrade shall not vary more than one tenth foot (0.10') from that called for on the plans or detail drawings.

G. Percentage of compaction specified shall be the minimum acceptable. Unless otherwise specified, 90% will be the minimum acceptable. The percentage represents the ratio of the dry density of the compacted material to the maximum dry density of the material, as determined by the procedure set forth in ASTM Designation D 1557.

1.05 MEASUREMENT AND PAYMENT

A. Except as provided, roadway subgrade preparation shall be paid for under other items of work and no additional compensation shall be made therefor.

PART 2 - PRODUCTS

Not used

PART 3 - EXECUTION

3.01 SUBGRADE PREPARATION

A. The Contractor shall accurately grade and prepare the subgrade section to the lines and grades called for on the plans and detail drawings, with due provision for future surface improvements and in accordance with Section 19-2, *"Roadway Excavation,"* of the *State Specifications*.

B. Upon completion of roadway earthwork operations, the entire work area shall be scarified to a minimum depth of six inches (6"), or as called for on the plans and detail drawings, wetted or dried to an appropriate moisture content, and compacted to the lines and grades called for on the plans and detail drawings, at a density of not less than ninety-five percent (95%), unless otherwise noted on the plans, of maximum dry density as determined by the procedure set forth in ASTM D 1557.

C. The Contractor shall, at all times, maintain the subgrade surface in such condition as to readily drain effectively. Vehicular and equipment traffic shall be distributed across the prepared surface in such a manner as to prevent continual operation in one path. The Contractor shall repair any damage to the prepared subgrade to the satisfaction of the Engineer, at no additional expense to the contract.

D. Storage or stockpiling of heavy loads on the roadway subgrade will not be permitted. Storage within the right-of-way shall be only upon the approval of the Engineer.

E. The Contractor shall be responsible for any failure of the underlying native soils during the course of the work, and shall repair any damage to the satisfaction of the Engineer, at no additional expense to the Contract.

F. Finished subgrade shall be subject to the approval of the Engineer, and no subsequent material or improvement shall be placed thereon until approval for it has been obtained from the Engineer.

End of Section

SECTION 02221 - TRENCH EXCAVATION AND BACKFILL

CONTENTS:

Part 1 - General 1

1.01 Work Included 1

1.02 Related Sections 2

1.03 Reference Standards 2

1.04 Quality Assurance 2

1.05 Measurement And Payment 3

1.06 Permit 3

1.07 Engineer's Review 3

1.08 Guarantees 3

Part 2 - Products 4

2.01 Backfill Requirements – General 4

2.02 Initial Backfill 4

2.03 Subsequent Backfill 5

2.04 Other Backfill Materials 5

Part 3 - Execution 5

3.01 General 5

3.02 Trench Safety Plan 7

3.03 Lawns And Cultivated Areas 7

3.04 Width Of Trench 7

3.05 Paving Removal 8

3.06 Shoring, Sheeting And Bracing 8

3.07 Water Control 8

3.08 Backfill And Compaction 9

3.09 Base, Paving, And Testing 10

3.10 Testing 10

3.11 Traffic Signal Facilities, Detector Loops And Pavement Markings 10

SECTION 02221 - TRENCH EXCAVATION AND BACKFILL

PART 1 – GENERAL

1.01 WORK INCLUDED

A. It is the general intent of these specifications to specify conduct of the work in such manner as to cause the general public a minimum of inconvenience, with no exposure to unsafe conditions during construction, and to provide a trench that will properly support and protect the pipe and have no settlement on improved streets and only minor settlement in other areas where such settlement will not be noticed, or compensation made for any expected settlement. The degree of compaction and type of material will vary in accordance with type of pipe and soil and surface conditions.

   1. In general, it is the City's standard policy that no trenching will be allowed on a City Street until a period of five calendar years has expired from the previous time of trenching. In any case, when trenching occurs on a city street, the entire affected city block will be repaved in accordance with the Special Provisions and Project Plans.

B. Excavation of all earth, regardless of character and subsurface conditions, to the required lines and grade as shown on the plans for the installation of the subsurface pipelines, utilities, conduits, etc.

C. Shoring designed for general safety, worker protection, and protection of adjacent property from the hazards of caving ground shall be required for:

   1. Trench excavations

   2. Structural excavations

D. Control of ground water.

E. Backfill from the required pipe cover depth to subgrade.

F. Compaction as shown on the plans and as specified herein.

G. Restoration of traffic signals, conduits, detector loops and/or pavement markings damaged during construction.

H. See Sections 02710 and 02720 for additional specifications relating to water pipes, sewer pipes and recycled water pipes.

1.02 RELATED SECTIONS

A. Section 02400, "Storm Sewer System"

B. Section 02453, "Traffic Signals"

C. Section 02500, "Paving and Surfacing"

D. Section 02710, "Water System, Piping and Accessories"

E. Section 02720, "Sanitary Sewer Collection System"

F. Section 16550, "Street Lighting"

1.03 REFERENCE STANDARDS

Not used

1.04 QUALITY ASSURANCE

A. All work under this section will be subject to the inspection and approval of both the Engineer and an approved geotechnical engineer registered in California. Compaction testing either shall be performed by the geotechnical engineer or by a City approved independent testing laboratory under the supervision of a California registered geotechnical engineer.

B. The geotechnical engineer shall make enough visits to the site to insure ongoing familiarity with the progress and quality of the work. The geotechnical engineer shall make a sufficient number of field observations and tests to allow the forming of an opinion regarding the adequacy of the site preparation, the acceptability of the native or import fill material, and the extent to which the degree of compaction meets the specification requirements and the project needs.

C. Any fill where the site preparation, type of material, or compaction is not approved by the geotechnical engineer shall be removed and/or recompacted until the requirements are satisfied and approved by said geotechnical engineer. As required, fill material shall be tested for pollutants and certified for suitability by the geotechnical engineer.

D. On City-funded projects, services of the geotechnical engineer and/or testing laboratory shall be retained by, and paid for by the City. On all other projects, the geotechnical engineer and/or testing laboratory shall be retained by, and paid for by the developer. For City-funded projects, testing will be paid for by the City; however, testing or retesting caused by unsatisfactory contract operations shall be paid for by the Contractor.

E. The geotechnical engineer shall provide quality assurance reports as required and accepted by the Engineer.

1.05 MEASUREMENT AND PAYMENT

Measurement and payment of trench excavation and backfill shall be included in the cost per lineal foot of the size of pipe installed or the structure constructed.

1.06 PERMIT

A. For trenches or excavations five feet (5') deep or deeper, the Contractor shall obtain a permit for such excavation from the State Department of Industrial Relations, Division of Safety and Health (DOSH). The Contractor shall submit a copy of the permit to the Engineer prior to initiating any work requiring said permit.

1.07 ENGINEER'S REVIEW

A. The duty of the Engineer to conduct construction review of the Contractor's performance is not intended to include a review or approval of the adequacy of the Contractor's safety supervisor, the safety program, or any safety measures taken in, on, or near the construction site.

B. The Engineer will review the submittal of the Contractor's proposed shoring system to verify the general scope of the work, to determine that qualified professional engineering services are used and to determine that appropriate construction techniques are proposed for use. This review shall not, in any way, be construed to relieve the Contractor from sole responsibility for the design and safety of such shoring.

1.08 GUARANTEES

A. The Contractor shall guaranty his work against settlement for a minimum period of one (1) year after the Notice of Completion has been filed, and shall repair all damage caused by settlement within that time. For the purpose of these specifications, settlement will be deemed to have occurred if either of the following conditions exist:

1. On paved streets, a depression of three-eighths of an inch (3/8") below the average of the sides of the uncut portion; or

2. Along shoulder areas and unpaved portions of the rights-of-way, a depression of three-quarters of an inch (3/4") below the average of the sides of the uncut portion.

PART 2 - PRODUCTS

2.01 BACKFILL REQUIREMENTS – GENERAL

A. See the applicable City Standard Drawings for typical pipe trench requirements and indication of placement limits for pipe bedding, initial backfill and subsequent backfill. Unless otherwise directed, import materials will not be authorized until suitable materials from contract excavation have been exhausted.

2.02 INITIAL BACKFILL AND BEDDING MATERIAL

A. Initial backfill shall be clean, sound and durable natural sand with a sand equivalent value of not less than thirty (30) as determined by California Test 217, "Method of Test for Sand Equivalent". The sand shall conform to the following grading when tested in accordance with ASTM C 136, "Method for Sieve Analysis of Fine and Course Aggregates":

SIEVE SIZE	PERCENT PASSING
3 / 4 "	100
# 4	90 – 100
# 20	0 – 60
# 200	0 – 15

Often existing on-site material obtained from trench excavation will conform to the specified requirements. However, the City makes no warranty of such conformance. In any case, it shall be the responsibility of the Contractor to demonstrate conformance by submittal of suitable results from sand equivalent testing and sieve analysis.

As required, import material meeting the above-specified requirements shall be furnished to either supplement or replace unsuitable trench excavation material. The Contractor shall dispose of all unsuitable trench excavation.

B. For initial backfill, when specified in the Special Provisions, it may be required that initial backfill material passing the No. 4 mesh sieve shall be subjected to City performed resistivity testing. For said material, when tested, resistivity shall be not less than two thousand (2,000) ohm-centimeters and pH shall be six and one-half (6.5) or higher.

2.03 SUBSEQUENT BACKFILL

A. Unless otherwise specified in the Special Provisions, subsequent backfill shall consist of suitable materials obtained from contract excavation. The Contractor shall supplement with import materials, as required and authorized. Suitable materials shall be non-organic, native soil or soil-rock, or fragments of concrete, brick or asphalt. No fragment or rock shall be larger than 2" in the largest dimension.

2.04 OTHER BACKFILL MATERIALS

A. Drain rock and other special earth-rock backfill materials shall be provided as specified in the Special Provisions, or directed and authorized.

PART 3 - EXECUTION

3.01 GENERAL

A. Unless otherwise indicated on the plans or in the special conditions, excavation shall be by open cut. Trenching machines may be used, except where their use will result in damage to existing facilities. For facility to be constructed in filled areas, the entire area fill shall be placed and compacted before the trench is excavated.

B. Trenches shall be excavated at least six inches (6") below the barrel of the pipe and the bottom refilled with select imported material of the type specified. See applicable City Standard Drawings, for details of trench construction.

C. Whenever the maximum allowable trench width is exceeded for any reason, the Contractor shall concrete embed or otherwise cradle the pipe in a manner satisfactory to the Engineer.

D. Excavation shall be supported as set forth in the rules, orders, and regulations of the California Department of Industrial Relations, Division of Industrial Accidents. All shoring, sheeting, and bracing shall conform to the requirements of the State or local agents having jurisdiction over such matters. Shoring, sheeting, and bracing shall be removed in a manner that will protect the workers and prevent caving of banks and damage to the pipe, excavation, backfill or adjacent property. No sheeting will be withdrawn from below the top of the pipe after completion of backfill to that level.

E. The Contractor shall do all excavation of whatever substance is encountered to the lines and grades shown on the plans. All material suitable for use as backfill shall be piled in an orderly manner at a sufficient distance from the edge of the trench to avoid overloading and to prevent sliding into the trench. The Contractor shall do such grading or work as is necessary to prevent surface water from entering the excavation. Storage of equipment or material on street right of way shall not be allowed after normal working hours.

F. Except with specific approval of the Engineer, no more than one hundred feet (100') of open trench shall be excavated in advance of laying the pipe. Not more than twenty-five feet (25') of excavated trench shall remain unbackfilled at the end of each day's work. The remainder of the trench shall be backfilled, initially compacted, and opened to traffic. All operations shall be carried out in an orderly fashion. Backfilling, compacting and cleanup shall be accomplished as sections of the pipe are installed. Traffic through the work area shall not be impeded or obstructed at any time.

G. Unbackfilled portions of trench shall be shored and covered each evening with steel trench plates, properly shimmed, steel spiked and ramped with temporary asphalt (cutback), and with traffic control signs and devices installed in accordance with the current edition of the State Department of Transportation *"Manual of Uniform Traffic Control Devices"*.

H. The Contractor shall obtain compaction and install base and temporary paving promptly. He shall provide vehicular access to all homes each evening, install laterals promptly, keep all streets clean and free of dust, mud or debris by providing daily clean up as necessary.

I. Native material shall be used where proper compaction and a stable surface can be obtained. Stabilization methods or imported material shall be provided when and where directed by the Engineer.

J. No backfilling shall be done until the installation to be covered has been inspected and approved for covering. Compaction of backfill shall proceed immediately after backfilling.

K. The Contractor shall immediately notify the Engineer upon encountering underground water. Accumulated water shall be prevented from flowing down through the bedding material and later pumping out and softening of surfaces or subgrade causing pavement failure. Where water causes such problems, during either construction or the guaranty period, it shall be drained to the nearest point where flow can be acceptably relieved; using gravel encased perforated metal pipe.

L. Sanitary sewer water shall not be allowed to flow into the storm drain system.

M. Trench paving and concrete cap shall be in accordance with applicable *City Standard Drawings* and Section 02500, *"Paving and Surfacing,"* of these specifications.

3.02 TRENCH SAFETY PLAN

A. For trenches and excavations five feet (5') or more in depth, the Contractor shall submit to the Engineer a detailed plan, and any revisions thereto, showing design of shoring, bracing, sloping, or other provisions to be made for worker protection from the hazards of caving ground.

B. Such plan shall be submitted at least ten (10) working days before the Contractor intends to begin trenching or do excavation work.

C. If such plan varies from the shoring system standards established by the Construction Safety orders, the plan shall be prepared, sealed and signed by a Civil or Structural Engineer registered in California. Signed and sealed copies of calculations necessary to qualify the system shall also be submitted.

D. Nothing herein shall be deemed to allow the use of shoring, sloping, or protective system less effective than that required by the Construction Safety Orders of the Division of Industrial Safety.

3.03 LAWNS AND CULTIVATED AREAS

A. Where trench crosses lawns, the sod shall be removed by cutting, stored and kept moist and replaced to its initial condition. Where trench crosses cultivated areas, the top soil shall be replaced and replanted or cultivated into the same condition as existed prior to excavation.

B. Due care shall be exercised to avoid injury to existing trees, shrubs and other plants that are not to be removed. All work shall conform to applicable sections of Section 16, "Clearing and Grubbing" of the State Specifications.

3.04 WIDTH OF TRENCH

A. Except where otherwise specifically permitted, sides of trenches shall be vertical, shored as required, and shall be of uniform width from top to bottom. Trenches shall be of a width as shown on the detail sheets in the plans, except for small diameter laterals which may be installed in narrow "Ditch-Witch" type of trench.

B. Unless otherwise specified or shown, the maximum width of trench measured at the top of the pipe shall not exceed the allowed width shown on the City's Standard Drawings.

C. If trench widths exceed those specified, install all additional concrete stabilization material, bedding and cover, backfill, base and paving in conformance with these specifications, at no additional cost to the City.

3.05 PAVING REMOVAL

A. Asphalt concrete shall be cut with a suitable tool, preferably a sawcutter, before excavation. Cutting with a jackhammer will be allowed as will cutting with a suitable grader-mounted wheel provided that a neat orderly result is accomplished. Breaking of concrete or asphalt with excavation equipment will not be permitted.

B. After trench backfill and compaction, existing paving shall be saw cut vertically, with a neat, square edge just prior to final paving to a point twelve inches (12") or more wider than each side of the trench line. Edges of all asphalt concrete on streets and roadways shall be saw-cut at least four inches (4") deep or to the depth of the existing asphalt concrete pavement, whichever is lesser, with a concrete saw. Saw cuts shall be parallel or perpendicular to centerline of the trench.

C. Excess paving shall be disposed of and shall not be used as backfill material.

D. All silt, and water used in the sawcutting operation, shall be removed through the use of a vacuum machine and properly disposed of offsite. All catchbasins downstream from the sawcutting operation shall be covered to prevent sediment from entering.

3.06 SHORING, SHEETING AND BRACING

A. The Contractor shall furnish and install all shoring, sheeting, and bracing required to support adjacent earth banks and structures for the protection and safety of all personnel working in the trench. All shoring, sheeting, and bracing shall conform to the requirements of the State Department of Industrial Relations (DIR), Division of Occupational Safety and Health (DOSH), or local agents having jurisdiction over such matters.

B. Remove shoring, sheeting, and bracing in a manner that will protect the workers and prevent caving of banks and damage to the pipe, excavation, backfill, or adjacent property.

3.07 WATER CONTROL

A. The Contractor shall be solely responsible for dewatering trenches and excavations, and subsequent control of ground water.

B. Contractor shall provide and maintain such pumps or other equipment as may be necessary to control ground water and seepage, to the satisfaction of the Engineer and in compliance with the requirements of the geotechnical report. All pumped water must be treated for sediment removal prior to discharge to City storm drains. Seepage coming from the sewer line shall be disposed of into the sanitary system.

3.08 BACKFILL AND COMPACTION

A. Initial backfill shall be carefully packed under the haunches of the pipe and brought up simultaneously on both sides, to obviate any displacement of the pipe from its true alignment. The initial backfill shall be compacted in layers no more than eight inches (8") in thickness, in a manner that will preclude moving the pipe, to not less than ninety percent (90%) of maximum dry density as determined by the procedure set forth in ASTM D 1557, *"Test Methods For Moisture-Density Relations of Soils and Soil Aggregate Mixtures Using Ten Pound Rammer and Eighteen Inch Drop."* Jetting or ponding of backfill material will not be permitted.

B. Subsequent backfill shall be placed in loose lifts not exceeding eight inches (8") in thickness before compaction, and compacted by the use of pneumatic tampers or other mechanical means approved by the geotechnical engineer. Each layer shall be watered or dried, as required, to bring the soils as close as practical to the optimum moisture content for proper compaction. Compaction equipment or methods that produce horizontal or vertical earth pressures, which may cause excessive displacement or may damage the pipeline, will not be permitted. Lifts of backfill material shall be compacted to not less than ninety percent (90%) above the pipe but not less than ninety-five percent (95%) for a minimum depth of thirty inches (30") below subgrade as determined by the procedure set forth in ASTM D 1557. Subsequent backfill for trenches in unpaved, non-traffic areas shall be compacted to not less than eighty-five percent (85%) of maximum dry density. Jetting or ponding of backfill material will not be permitted. Jetting may be allowed when approved by a Geotechnical Engineer and only in conjunction with mechanical compaction equipment.

Jetting shall be performed as follows:

1. Water is to be introduced into the backfill by means of at least a 1 inch jet pipe.

2. The jet pipe shall extend to within 15 inches of the top of pipe.

3. The source of the water shall be a properly metered hydrant or water tank with minimum pressure of not less than 60 psi.

4. "Bridge" in backfill are to be completely broken down during the jetting process without flooding.

5. Jet points along the line shall be staggered from side to side and shall not exceed 6 feet or as necessary to ensure the proper results.

6. Backfill is to be done in no more than 2 foot lifts.

3.09 BASE, PAVING, AND TESTING

The Contractor shall compact material as work progresses, and base and temporary paving shall be installed the same day as excavated. Contractor shall test pipe within five (5) working days of installation and shall install permanent paving within ten (10) working days of initial excavation.

3.10 TESTING

A. The City shall make all tests when advised by the Contractor that, in the Contractor's opinion, sufficient densities have been achieved. If the first tests in any area fail, the Contractor shall pay for any further testing in that area until specified densities are obtained. Engineer shall determine the number and location of tests required.

B. Contractor shall furnish a backhoe and operator upon request, at no cost to the City to assist in testing.

3.11 TRAFFIC SIGNAL FACILITIES, DETECTOR LOOPS AND PAVEMENT MARKINGS

A. Existing signal facilities, detector loops, and pavement markings shall be protected. Any damage shall be replaced or restored at the Contractor's expense in accordance with the specifications and as approved by the Engineer.

End of Section

SECTION 02270 - EROSION CONTROL

CONTENTS:

Part 1 - General 1

1.01 Work Included 1

1.02 Related Requirements 1

1.03 Reference Standards 2

1.04 Quality Assurance 2

1.05 Measurement And Payment 2

Part 2 - Products 2

2.01 General 2

2.02 Top Soil 2

2.03 Seed 3

2.04 Fertilizer 3

2.05 Straw Mulch 3

2.06 Straw Bales 3

2.07 Silt Fence 3

2.08 Lumber 4

2.09 Pipes 4

Part 3 - Execution 4

3.01 Job Conditions 4

3.02 Temporary And Permanent Planting Of Exposed Soils 5

3.03 Temporary Dikes 7

3.04 Temporary Swale 8

3.05 Temporary Grade Stabilization Structure 9

3.06 Sediment Basins 11

3.07 Sediment Traps 13

3.08 Temporary Straw Bale Dikes 14

3.09 Temporary Silt Fence 14

3.10 Special Requirements 15

3.11 Control Of Ground Water 15

SECTION 02270 - EROSION CONTROL

PART 1 - GENERAL

1.01 WORK INCLUDED

A. Erosion and sediment control through the use of the following:

1. Dikes
2. Swales
3. Grade stabilization structures
4. Sediment basins
5. Sediment traps
6. Silt fences
7. Straw and bales
8. Planting and ground coverage
9. Maintenance of erosion control improvements
10. Cleanup and removal of silt from roadways on-site and off-site

B. Dust alleviation and control by watering, matting, planting, etc.

C. Provision of all materials, equipment, and apparatus not specifically mentioned herein or noted on the plans, but which are obviously necessary to complete the dust and erosion control.

1.02 RELATED REQUIREMENTS

A. Section 02100, *"Clearing, Grubbing and Site Preparation"*

B. Section 02200, *"Engineered Fill"*

C. Section 02210, *"Site Grading"*

D. Section 02220, *"Roadway Subgrade Preparation"*

E. Section 02221, *"Trench Excavation and Backfill"*

F. Section 02400, *"Storm Sewer System"*

G. Section 02499, *"Landscape Maintenance"*

H. Section 03300, *"Minor Concrete"*

1.03 REFERENCE STANDARDS

A. Manual of Standards for Erosion and Sediment Control Measures - Association of Bay Area Governments (ABAG)

B. State Specifications

C. American Association of State Highway and Transportation Officials (AASHTO)

1.04 QUALITY ASSURANCE

A. All work shall be done to the satisfaction of the designated representative of the geotechnical consultant, and shall meet the approval of the Engineer.

1.05 MEASUREMENT AND PAYMENT

A. On City-funded projects, payments for erosion, sedimentation, and dust control shall be included in the different related sections or as per item set forth in the Bid Schedule and in accordance with Section 20-3.06, *"Measurement,"* and Section 20-3.07, *"Payment,"* of the *State Specifications.*

PART 2 - PRODUCTS

2.01 GENERAL

A. All materials shall conform to applicable requirements of Section 20-2, *"Erosion Control and Highway Planting/Materials,"* of the *State Specifications*, listed as follows and meeting the requirements of ABAG *Manual of Standards for Erosion and Sediment Control Measures.*

2.02 TOP SOIL

A. The soil on the site shall meet the following criteria:

1. The soil shall contain no more than seventy percent (70%) sand (as defined by USDA, Soil Conservation Service). This is to provide enough available water-holding capacity to support plant growth.

2. The soil shall have sufficient porous base (greater than thirty percent (30%)) to permit adequate root penetration and provide for exchange of gases and water.

3. The soil shall be free from any material harmful to plant growth.

4. Topsoil that has been graded from the site shall be stockpiled, whenever possible, for reapplication on exposed graded slopes during the final grading stage. The soil shall be disked into the existing soil to provide for a good bond.

2.03 SEED

A. A seed mix similar to the native plants and grasses or the following seed mix shall be applied at above the minimum rate specified below:

Seed Type	Minimum Application Rate (Pounds per Acre)
Blando Brome	30
Annual Ryegrass	20

B. All seed shall be certified live and delivered to the site tagged and labeled in accordance with the California Agricultural Code and shall be acceptable to the County Agricultural Commissioner.

2.04 FERTILIZER

A. The fertilizer shall contain a minimum of sixteen percent (16%) nitrogen, twenty percent (20%) available phosphoric acid, zero percent (0%) water soluble potash, and fifteen percent (15%) sulfur. It shall be uniform in composition, dry and free flowing, pelleted or granular.

B. All fertilizer shall be delivered in unbroken or unopened containers, labeled in accordance with the applicable State regulations, and bearing the warranty of the producer for the grade furnished.

2.05 STRAW MULCH

A. Straw mulch shall be of unrotted small grain straw and shall be applied at the rate of four thousand pounds (4,000#) per acre. Mulch materials shall be relatively free of all noxious weeds. If the straw is applied with a blower, it shall be chopped in lengths not shorter than six inches (6").

2.06 STRAW BALES

A. Straw shall be derived from wheat, oats, or barley. The Contractor shall furnish evidence that clearance has been obtained from the County Agricultural Commissioner, as required by law, before straw obtained from outside the County in which it is to be used is delivered to the site of the work. Straw that has been used for stable bedding shall not be used.

2.07 SILT FENCE

A. Filter fabric shall be a pervious sheet of synthetic polymer composed of at least eighty-five percent (85%) by weight ethylene, propylene, amide, ester, or vinylidene yarn, woven or non-woven, and shall contain stabilizers and/or inhibitors to resist deterioration by heat, water and ultra-violet light. The fabric shall conform to the following criteria:

1. The equivalent opening size (U.S. Standard Sieve) shall be within the range 70-100.

2. The tensile strength (ASTM D 1682 G "Test Method For Breaking Load and Elongation of Textile Fabric") shall be at least one hundred twenty pounds (120#). The strength of fabric required depends on the wire support fence. The strength given is the minimum for a six-inch (6") square mesh wire support fence. If extra strength fabric is used without a support fence, the strength required shall be two hundred pounds (200#) minimum with posts spaced on six foot (6') centers.

B. Posts for silt fences shall be either four-inch (4") square wood or 1.33 pounds-per-linear-foot steel with a minimum length of five feet (5'). Steel posts shall have projections for fastening wire to them.

C. Wire fence reinforcement for silt fences shall be a minimum of forty-two inches (42") in height, shall be a minimum of 14 gauge, and shall have a maximum mesh spacing of six inches (6").

2.08 LUMBER

A. Lumber shall be construction grade redwood rough finished, or approved equal.

2.09 PIPES

A. Pipes and conduits shall conform to applicable sections of these specifications and the requirement of the ABAG *Manual of Standards for Erosion and Sediment Control Measures.*

PART 3 - EXECUTION

3.01 JOB CONDITIONS

A. Equipment and materials shall be stored as to ensure the preservation of its quality and fitness for the work. Equipment and materials shall be located on the construction site so it can be used on short notice.

B. Erosion and sediment control measures shall be in place during the rainy season (October 1st through April 30th) and shall be frequently serviced to maintain their full function. However, for projects having the potential to cause water pollution, the Stormwater Pollution Prevention Plan (SWPPP) must be available on site and at all times and must be implemented year-round throughout the duration of the construction project.

For the foregoing type of projects, no construction activity shall be performed until the SWPPP has been certified and appropriate Best Management Practices (BMPs) have been implemented in accordance with Section 2 of the California Stormwater BMP Handbook for Construction as developed by the California Stormwater Quality Association (CASQA), and such other stormwater pollution regulatory agency implementing guidelines.

C. Dust control measures shall be implemented at all times during the construction period until no longer required. Contractor shall pay for the removal of all silt from the storm drain system and the inspection thereof.

3.02 TEMPORARY AND PERMANENT PLANTING OF EXPOSED SOILS

A. Before seeding, necessary drainage controls such as dikes at tops of slopes and swales on slope benches shall be installed to prevent runoff from eroding slopes before grass is established. Temporary drainage controls shall remain in place until permanent drainage facilities are installed or until slopes are stabilized and temporary controls are no longer necessary for continued slope stability.

B. The area to be seeded shall have a firm seed bed that has previously been roughened by scarifying, disking, harrowing, chiseling, or track-walking, or otherwise worked to a depth of two inches (2") to four inches (4") unless a roughed condition already exists. No implement shall be used that will create an excessive amount of downward movement of soil or clods on sloping areas. The seedbeds may be prepared at the time of completion of earth-moving work.

C. Seeding, fertilizing, and mulching shall be done by October 1st of any year.

D. Slopes above critical areas, such as a water supply reservoir or an existing residence, shall be stabilized by October 1st of any year. Irrigation shall be used if rainfall is insufficient to establish protection by this date.

E. Seed shall be distributed uniformly over the seedbed by hand broadcasting, hydroseeding or other approved method. Seed shall be covered to a depth of one-quarter to one-half inch (1/4"-1/2"), except when seed is hydraulically applied with a mulch. Seed shall not have a soil cover greater than one inch (1").

F. Fertilizer shall be distributed uniformly over the seedbed at a rate of not less than five hundred pounds (500#) per acre. Fertilizer shall be applied in any way that will result in uniform distribution. Fertilizer shall be incorporated into the soil if possible. Incorporation may be as part of the seedbed preparation or as part of the seeding operation. Fertilizer may also be applied as a mix with seed and fiber in a slurry (see Paragraph H below).

G. A mulch cover shall be distributed uniformly over the surface of the seeded area. Mulching shall follow immediately after the seeding.

1. For slopes flatter than 2:1 and within a fifty foot (50') access of a straw blower, the following procedure shall be used: Straw mulch shall be applied at the rate of four thousand pounds (4,000#) per acre. The mulch shall be applied by hand, blower or other suitable equipment. The mulch shall be anchored in place using hand tools, mulching rollers, disks, nets, chemical tackifiers or other suitable means.

2. For slopes steeper than two to one (2:1), mulch shall be applied hydraulically as specified in Item H, below.

H. Hydroseeding is defined as the simultaneous application of seed, fertilizer, and mulch in a slurry.

1. The hydroseeder shall be equipped with a built-in continuous agitation system of sufficient operating capacity to produce a homogeneous slurry and with a discharge system, that applies the slurry to the slopes at a continuous and uniform rate. Seed shall not remain in the slurry longer than thirty (30) minutes. The slurry shall contain the required fertilizer (see preceding Item F) and shall also contain wood fiber to be applied at the rate of one thousand five hundred pounds (1,500#) of wood fiber per acre.

2. The water used shall be potable water or Class 1 or 2 agricultural irrigation water.

3. The slurry shall be continuously mixed and shall be mixed for at least five (5) minutes after the last addition before application starts. The slurry shall be applied at a rate that is non-erosive and minimizes runoff. The slurry must have fibrous and/or chemical adhesives to ensure retention of seed mix on soil slopes.

I. Irrigation is optional, except on critical areas (see Paragraph D above).

1. If irrigation is required or desired, the following procedure shall be used. The top one-inch (1") of soil of all seeded areas shall be kept moist for the first twenty-one (21) days after seeding. Moisture needs will be determined by visual observation. After twenty-one (21) days, the top six inches (6") of soil shall be kept moist until the first major rainstorm (minimum 1.0-inch per 24-hour period). The moisture level shall not be allowed to drop below fifty percent (50%) available moisture capacity.

2. Irrigation shall not exceed:

a. One half inch (0.5") of water applied per acre per irrigation on sandy soils;

b. One inch (1.0") of water applied per acre per irrigation on loam- and clay-type soils.

3. Irrigation water shall be potable or Class 1 or 2 agricultural irrigation water. Water shall be applied by sprinklers or similar devices at a non-erosive rate using the above criteria as a guide.

J. Seeded areas shall be inspected no more than thirty (30) days after planting and no more than thirty (30) days after the first rain. Follow-up inspections shall be done between sixty (60) and ninety (90) days after the first inspection and again in the spring. The spring inspection shall establish any corrective measures necessary before the next rainy season. If, at the sixty (60) day inspections, the vegetation is not established and/or erosion is expected to continue, slopes shall be reseeded and/or repaired. Eroded slopes shall be smoothed over, including the filling of rills and/or gullies, before reseeding starts. The reseeding operation shall follow the specifications given above.

3.03 TEMPORARY DIKES

A. The top width shall be a minimum of two feet (2').

B. The height of compacted earth fill dike shall be a minimum of eighteen inches (18") measured from the existing ground at the upslope toe to the top of the dike and at least twelve inches (12") above any outlet pipe. The maximum allowable water depth in the diked areas shall not exceed thirty inches (30").

C. The side slopes shall be 2:1 or flatter.

D. The grade along the face of the dike (flow area) shall be dependent on topography, but shall be a minimum of one percent (1%) (sufficient grade to drain) to an adequate outlet. Drainage must be positive. The "flow area" of the dike is defined as the upslope portion of the dike face and adjacent ground surface over which diverted runoff water flows.

E. The flow area shall be stabilized:

1. where the slope of the flow area exceeds five percent (5%); or

2. where the slope of the flow area is one percent (1%) to five percent (5%) and the maximum flow velocity from the ten (10) year frequency storm is exceeded as specified below:

Flow Area Surface	Maximum Velocity (feet per second)
Sand and sandy loam	2.5
Silt loam	3.0
Sandy clay loam	3.5
Clay loam	4.0
Clay, find gravel and graded loam to gravel	5.0
Graded silt to cobbles	5.5
Shale, hardpan and course gravel	6.0

F. Stabilization, when required by Paragraph E above, shall be:

1. in accordance with the ABAG *Standard and Sample Specifications for Grass Protection of Waterways, Swales and Dikes*, when the dike intercepts runoff from a protected or stabilized area; or

2. by lining the flow area with stone that meets AASHTO M43 size No. 2 or 24 in a layer at least three inches (3") thick and pressed into the soil. The lining shall extend up the upslope side of the dike to a height of at least eight inches (8") measured vertically from the upslope toe and shall extend upslope from the upslope toe a distance sufficient to include the flow area.

G. Diverted runoff from a protected or stabilized area shall flow directly to a grade stabilization structure and/or receiving water channel. Diverted water from a disturbed or exposed upland area shall flow to a sediment trap or a sediment basin or to an area protected by these practices.

H. All dikes shall be machine-compacted with the tires or tracks going over at least ninety percent (90%) of the surface. There shall be a maximum of six inches (6") of lift between each compaction.

I. The dike shall be inspected periodically and maintained as required.

3.04 TEMPORARY SWALE

A. The bottom width shall be a minimum of seven feet (7') and the bottom shall be level.

B. The depth shall be a minimum of one-foot (1').

C. The side slope shall be two to one (2:1) or flatter (flat enough to allow construction traffic to cross if desired).

D. The grade shall be dependent on topography, but shall be a minimum of one percent (1%) (sufficient grade to drain) to an adequate outlet. Drainage must be positive.

E. The swale shall be stabilized:

1. where the slope of the swale bottom exceeds five percent (5%), or

2. where the slope of the swale bottom is one percent (1%) to five percent (5%) and the maximum flow velocity from the 10-year frequency storm is exceeded as specified below.

Swale Surface	Maximum Velocity (feet per second)
Sand and sandy loam	2.5
Silt loam	3.0
Sandy clay loam	3.5
Clay loam	4.0

Clay, fine gravel and graded loam to gravel	5.0
Graded silt to cobbles	5.5
Shale, hardpan and coarse gravels	6.0

F. Stabilization, when required by Paragraph E above, shall be:

1. with grass protection when the swale receives runoff from a stabilized area; or

2. by lining the flow area with stone that meets AASHTO M43 size No. 2 or 24 in a layer at least three inches (3") thick and pressed into the soil. The lining shall extend across the bottom and up both sides of the channel to a height at least eight inches (8") vertically above the bottom.

G. At all points where the swale will be crossed by vehicles several times a day, the swale shall be stabilized according to preceding Paragraph 3.04 (F) 2, above, except that the stone lining shall be at least six inches (6") thick for the whole width of the traffic crossing.

H. The swale shall be located to take advantage of the most suitable outlet. The swale shall discharge without causing erosion at its outlet.

I. All trees, brush, stumps, obstructions and other objectionable material shall be removed and disposed of so as not to interfere with the proper functioning of the swale.

J. The swale shall be excavated and/or shaped to line, grade, and cross-section as required to meet the criteria specified herein, and be free of bank projections or other irregularities that will impede normal flow.

K. Fills shall be compacted as needed to prevent unequal settlement that would cause damage in the completed swale.

L. All earth removed and not needed in construction shall be spread or disposed of so it will not interfere with the functioning of the swale.

M. The swale shall be inspected periodically and maintained as required.

3.05 TEMPORARY GRADE STABILIZATION STRUCTURE

A. Rigid Pipe Slope Drain

1. The inlet pipe shall have a slope of three percent (3%) or steeper.

2. The top of the earth dike over the inlet pipe, and those dikes carrying water to the pipe, shall be at least one foot (1') higher at all points than the top of the inlet pipe.

3. The pipe shall be corrugated metal pipe with watertight connecting bands.

4. A riprap apron shall be provided at the outlet. This shall consist of six-inch (6") diameter rocks placed as shown on the plans.

5. The soil around and under the inlet pipe and entrance section shall be hand-tamped in four-inch (4") lifts to the top of the earth dike.

6. Follow-up inspection and any needed maintenance shall be performed after each store.

B. Flexible Pipe Slope Drain

1. The inlet pipe shall have a slope of three percent (3%) or steeper.

2. The top of the earth dike over the inlet pipe, and those dikes carrying water to the pipe, shall be at least one foot (1') higher at all points than the top of the inlet pipe.

3. The inlet pipe shall be corrugated metal pipe with watertight connecting bands.

4. The flexible tubing shall be the same diameter as the inlet pipe and shall be constructed of durable material with hold-down grommets spaced no more than ten feet (10') on centers.

5. The flexible tubing shall be securely fastened to the corrugated metal pipe with metal strapping or watertight collars.

6. The flexible tubing shall be securely anchored to the slope by staking at grommets provided.

7. A riprap apron shall be provided at the outlet. This shall consist of six-inch (6") diameter rocks placed as shown on the plans.

8. The soil around and under the inlet pipe and entrance section shall be hand-tamped in four-inch (4") lifts to the top of the earth dike.

9. Follow-up inspection and any needed maintenance shall be performed after each storm.

C. Paved Chute or Flume

1. The structure shall be placed on undisturbed soil or on well-compacted fill.

2. The cut or fill slope shall not be steeper than two to one (2:1) and shall not be flatter than twenty to one (20:1).

3. The top of the earth dike at the entrance, and those dikes carrying water to it, shall not be lower at any point than the top of the lining at the entrance of the structure.

4. The lining at the entrance to the structure shall extend above the crest as shown on the plans.

5. The lining shall be placed beginning at the lower end and proceeding up the slope to the upper end. The lining shall be well compacted and free of voids. The lining surface shall be reasonably smooth.

6. The entrance floor at the upper end of the structure shall have a slope toward the outlet of one-quarter to one-half inch (1/4" - 1/2") per foot.

7. The cut-off walls at the entrance and at the end of the discharge aprons shall be continuous with the lining.

8. The lining shall consist of Type 2 Portland cement concrete (3,000 psi), bituminous concrete or comparable non-erodible material.

9. An energy dissipator of adequate design shall be used to prevent erosion at the outlet.

3.06 SEDIMENT BASINS

A. Areas under the embankment and any structural works shall be cleared, grubbed, and stripped of any vegetation and rootmat. In order to facilitate cleanup and restoration, the basin area shall be cleared also.

B. A cut-off trench shall be excavated along the centerline of earth-fill embankments. The minimum depth shall be two feet (2'). The cut-off trench shall extend up both abutments to the riser crest elevation. The bottom width shall be wide enough to permit operation of excavation and compaction equipment and a minimum of four feet (4') in width. The side slopes shall be no steeper than one to one (1:1). Compaction requirements shall be the same as those for the embankment. The trench shall be dewatered during the backfilling and compacting operations.

C. Fill material for the embankment shall be taken from approved fill areas. It shall be clean material soil free of roots, woody vegetation, oversized stones, rocks or other objectionable material. Relatively pervious materials such as sand or gravel (*Unified Soil Classes GW, GP, SW, and SP*) shall not be placed in the embankment. Areas on which fill is to be placed shall be scarified prior to placement of fill. The fill material shall contain sufficient moisture so that it can be formed by hand into a ball without crumbling. If water can be squeezed out of the ball, it is too wet for proper compaction. Fill material shall be placed in six to eight inch (6" - 8") thick continuous layers over the entire length of the fill. Compaction shall be obtained by routing the hauling equipment over the fill so that the entire surface of each layer of the fill is traversed by at least one wheel or tread track of the equipment, or by the use of a compactor. The embankment shall be constructed to an elevation ten percent (10%) higher than the design height to allow for settlement if compaction is obtained with hauling equipment. If compactors are used for compaction, the overbuild may be reduced to not less than five percent (5%).

D. The principal spillway riser shall be securely attached to the discharge pipe by welding all around and all connections shall be watertight. The pipe and riser shall be placed on a firm, smooth soil foundation. The connection between the riser and the riser base shall be watertight. Pervious materials such as sand, gravel or crushed stone shall not be used as backfill around the pipe of anti-seep collars. The fill material around the pipe spillway shall be placed in four inch (4") layers and compacted under the shoulders and around the pipe to at least the same density as the adjacent embankment. A minimum of two feet (2') of hand-compacted backfill shall be placed over the pipe spillway before crossing it with construction equipment. Steel base plates shall have at least two and one-half feet (2-1/2') of compacted earth, stone or gravel placed over them to prevent flotation.

E. The emergency spillway shall not be installed in fill. Elevations, design width, and entrance and exit channel slopes are critical to the successful operation of the emergency spillway.

F. Baffles shall be constructed of four inch by four inch (4" x 4") posts and four feet by eight feet (4' x 8') by one-half inch (1/2") exterior plywood. The posts shall be set at least three feet (3') into the ground, no further apart than eight feet (8') center to center, and shall reach a height six inches (6") below the riser crest elevation. The plywood shall be securely fastened to the upstream side of the posts.

G. The embankment and emergency spillway shall be stabilized with vegetation immediately following construction.

H. Construction operations shall be carried out in such a manner that erosion and water pollution will be minimized. State and local laws concerning pollution abatement shall be complied with.

I. State and local requirements shall be met concerning fencing and signs warning the public of hazards of soft sediment and floodwater.

J. Maintenance and repairs shall be carried out as follows:

1. All damages caused by soil erosion or construction equipment shall be repaired before the end of each working day.

2. Sediment shall be removed from the basin when it reaches the specified distance below the top of the riser. This sediment shall be placed in such a manner that it will not erode from the site. The sediment shall not be deposited downstream from the embankment or in or adjacent to a stream or floodplain.

K. When temporary structures have served their intended purpose and the contributing drainage area has been properly stabilized, the embankment and resulting sediment deposits shall be leveled or otherwise disposed of in accordance with the approved erosion and sediment control plan.

3.07 SEDIMENT TRAPS

A. The area under the embankment shall be cleared, grubbed, and stripped of any vegetation and root mat. The pool area shall be cleared.

B. The fill material for the embankment shall be free of roots or other woody vegetation, as well, as oversized stones, rocks, organic material or other objectionable material. The embankment shall be compacted by traversing with equipment while it is being constructed.

C. Sediment shall be removed and the trap restored to its original dimensions when the sediment has accumulated to within one foot (1') of the outlet elevation. Removed sediment shall be deposited in a suitable area and in such a manner that it will not erode.

D. The structure shall be inspected after each rain and repairs made as needed.

E. Construction operations shall be carried out in such a manner that erosion and water pollution are minimized.

F. The structure shall be removed and the area stabilized when the remaining drainage area has been properly stabilized.

G. All cut-and-fill slopes shall be two to one (2:1) or flatter.

H. When a riser is used, all pipe joints shall be watertight.

I. When a riser is used, at least the top two-thirds of the riser shall be perforated with one half inch (1/2") diameter holes spaced eight inches (8") vertically and ten to twelve inches (10"-12") horizontally.

J. When a pipe outlet is used, fill material around the pipe spillway shall be hand-compacted in four-inch (4") layers. A minimum of one and one half feet (1.5') of hand-compacted backfill shall be placed over the pipe spillway. At least two feet (2') of backfill shall be placed if construction equipment will cross over the pipe spillway.

K. When an earth or stone outlet is used, outlet crest elevation shall be at least one foot (1') below the top of the embankment. Pipe outlets shall be at least one and one half feet (1.5') below the top of the embankment.

L. When a crushed stone outlet is used, the crushed stone used in the outlet shall meet AASHTO M43, size No. 2, 24, or its equivalent such as MSHA NO. 2. Gravel meeting the above gradation may be used if crushed stone is not available. Crusher run is not acceptable.

3.08 TEMPORARY STRAW BALE DIKES

A. Bales shall be placed in a row with ends tightly abutting as shown on the Plan.

B. Each bale shall be embedded in the soil a minimum of four inches (4").

C. Bales shall be securely anchored in place by two (2) wood stakes driven through the bales. The first stake in each bale shall be driven toward the previously laid bale to force bales together.

D. The dike shall be inspected after each storm, and repair or replacement shall be made promptly as needed.

E. Bales shall be removed when they have served their purpose so as not to block or impede storm flow or drainage.

3.09 TEMPORARY SILT FENCE

A. The height of silt fence shall not exceed thirty-six inches (36"). On slopes, the fence line shall follow the contour as closely as possible. In small swales, the fence line shall be curved upstream at the sides to direct the flow toward the middle of the fence.

B. If possible, the filter fabric shall be cut from a continuous roll to avoid the use of joints. When joints are necessary, filter cloth shall be spliced only at a support post, with a minimum six-inch (6") overlap and both ends securely fastened to the post.

C. Posts shall be spaced a maximum of ten feet (10') apart and driven securely into the ground, a minimum of twelve inches (12"). When extra strength fabric is used without the wire support fence, post spacing shall not exceed six feet (6').

D. A trench shall be excavated approximately four inches (4") wide and four inches (4") deep along the line of posts and upslope from the barrier.

E. When standard strength filter fabric is used, a wire mesh support fence shall be fastened securely to the upslope side of the posts using heavy duty wire staples at least one inch (1") long, tie wires or hog rings. The wire shall extend into the trench a minimum of two inches (2") and shall not extend more than thirty-six inches (36") inches above the original ground surface.

F. The standard strength filter fabric shall be stapled or wired to the fence, and eight inches (8") of the fabric shall extend into the trench. The fabric shall not extend more than thirty-six inches (36") above the original ground surface. Filter fabric shall not be stapled to existing trees.

G. When extra strength filter fabric and closer post spacing are used, the wire mesh support fence may be eliminated. In such a case, the filter fabric is stapled or wired directly to the posts with all other provisions of Subparagraph F, above, applying.

H. The trench shall be backfilled and the soil compacted over the toe of the filter fabric.

I. Silt fences shall be removed when they have served their useful purpose, but not before the upslope area has been permanently stabilized.

J. Silt fences and filter barriers shall be inspected immediately after each rainfall and at least daily during prolonged rainfall. Any required repairs shall be made immediately.

K. Should the fabric on a silt fence or filter barrier decompose or become ineffective prior to the end of the barriers expected usable life and the barrier is still necessary, the fabric shall be replaced promptly.

L. Sediment deposits should be removed when deposits reach approximately one-half (1/2) the height of the barrier.

M. Any sediment deposits remaining in place after the silt fence or filter barrier is no longer required should be dressed to conform to the existing grade, prepared and seeded.

3.10 SPECIAL REQUIREMENTS

A. All basins and check dams shall have been pumped dry, and all debris and silt removed within twenty-four (24) hours after each storm.

B. Hydroseed all fill and cut slopes as approved by the Engineer, with a vertical height of five feet (5') or more.

C. Changes to the erosion and sediment control plans to meet field conditions will be made only with the approval of, or at the direction of, the Engineer.

D. During the rainy season, all paved areas will be kept clear of earth material and debris. The site will be maintained so that a minimum of sediment-laden runoff enters the storm drainage system.

3.11 CONTROL OF GROUND WATER

A. The Contractor shall be solely responsible for dewatering excavations and subsequent control of ground water. The Contractor shall provide and maintain such pumps or other equipment as may be necessary to control ground water and seepage, to the satisfaction of the Engineer, until backfilling is completed.

End of Section

SECTION 02410 - SUBSURFACE DRAINS

CONTENTS:

Part 1 - General 1

1.01 Work Included 1

1.02 Related Work 1

1.03 Reference Standards 1

1.04 Quality Assurance 1

1.05 Measurement And Payment 1

Part 2 - Materials 1

2.01 Subdrain Pipe 1

2.02 Underdrain Outlets And Risers 2

2.03 Backfill Material 2

2.04 Geotextile 2

Part 3 - Execution 2

3.01 Laying And Placement 2

3.02 Cleanouts 3

SECTION 02410 - SUBSURFACE DRAINS

PART 1 - GENERAL

1.01 WORK INCLUDED

A. Furnishing and installing pipes, conduits, or tubing underdrains.

B. Furnishing and placing permeable material and filter fabric.

1.02 RELATED WORK

A. Section 02400, *"Storm Sewer System"*

1.03 REFERENCE STANDARDS

A. State Specifications

B. American Society for Testing and Materials (ASTM)

1.04 QUALITY ASSURANCE

Not used

1.05 MEASUREMENT AND PAYMENT

A. Underdrain shall be paid for at the contract price per linear foot for the various sizes, types, thickness', and coatings of, as designated in the Bid Schedule.

B. The contract price per linear foot for pipe underdrains shall include full compensation for furnishing all labor, materials, tools, equipment, and incidentals and for doing all the work involved in installing pipe underdrains complete in place, including excavation, filter fabric, permeable material, welded metal covers, outlets and risers, and structure backfill, as required, and as shown on these Plans and specified herein and in the Special Provisions.

PART 2 - MATERIALS

2.01 SUBDRAIN PIPE

A. Pipe materials shall conform to Section 68-1.02, *"Materials,"* of the *State Specifications*.

2.02 UNDERDRAIN OUTLETS AND RISERS

A. Underdrain outlets and underdrain terminal risers shall conform to Section 68-1.023, *"Underdrain Outlets and Risers,"* of the *State Specifications*.

2.03 BACKFILL MATERIAL

A. Permeable material, for use in backfilling trenches around and over subdrains, pipes, and behind retaining walls, shall conform to Section 68-1.025, *"Permeable Material,"* of the *State Specifications*.

2.04 GEOTEXTILE

A. Geotextiles for use in subdrains or as directed by the Engineer shall be of non-woven needle-punched construction and consist of long chain polymeric fibers composed of polypropylene, polyethylene, or polymide. The fibers shall be oriented into a multi-directional stable network. The geotextile shall conform to Section 88-1.03, *"Filter Fabric,"* of the *State Specifications*.

B. The geotextile shall be furnished in a protective wrapping which shall protect the fabric from ultra-violet radiation and from abrasion due to shipping and handling.

PART 3 - EXECUTION

3.01 LAYING AND PLACEMENT

A. The drain pipe and filter material shall be placed as shown on the plans or as determined by the Engineer. Unless otherwise directed by the Engineer, perforated pipe shall be laid with the perforations at the bottom. Corrugated metal pipe sections shall be joined with couplers.

B. Subsurface drains shall be placed to the depths, lines, and grades shown on the plans and as directed by the Engineer. Subsurface drains shall discharge to a suitable outlet as defined in the field by the Engineer or as shown on the plans.

C. After excavating the subsurface drain trench, but before placing the drain pipe, a minimum of six inches (6") of permeable material shall be placed on the trench bottom. The filter material shall be rounded to conform to the curvature of the pipe so that the pipe is carefully bedded. The trench shall then be backfilled to the top of the pipe, and backfill should be tamped or hand-wedged into place to provide firm support at the sides of the pipe. In general, the installation shall follow the guidelines of ASTM D 2774, *"Recommended Practice For Underground Installation of Thermoplastic Pressure Piping,"* except that compaction of the filter material in the trench shall not be required.

D. The Contractor shall, at his expense, replace pipes damaged during the installation of subsurface drains, as well as pipes not placed at the lines and grades called for on the plans or as determined by the Engineer.

E. The geotextile fabric shall be placed in the manner and at the locations shown on the plans. The surface to receive the fabric and/or the trench into which the fabric is to be placed shall be prepared to a smooth condition free of obstructions and debris.

F. The geotextile shall be covered with a permeable material within one week or less of its placement. Should the fabric be damaged during the construction, the torn or punctured section shall be repaired by placing a piece of fabric that is large enough to cover the damaged area and to meet the overlap requirement. Adjacent borders of the geotextile shall be overlapped a minimum of twelve inches (12"), or sewn. The preceding roll shall overlap the following roll in the direction the material is being placed.

3.02 CLEANOUTS

A. Cleanouts or access structures shall be provided as shown on the plans, at ends of the pipes and at junctions and connections of pipelines, and/or as directed by the Engineer. Junction angles should be no steeper than forty-five degrees (45°) where cleanout pipes connect to the subdrain pipes. Cleanouts shall be provided with caps and shall be marked with stakes or otherwise for identification and location.

B. Cleanout boxes shall be similar to cleanout boxes for sanitary sewers or as approved by the Engineer.

End of Section

SECTION 02500 - PAVING AND SURFACING

CONTENTS:

Part 1 - General 1

1.01 Work Included 1

1.02 Related Requirements 1

1.03 Reference Standards 1

1.04 Quality Assurance 1

1.05 Measurement And Payment 2

1.06 Submittals 4

Part 2 - Products 4

2.01 Aggregate Base 4

2.02 Prime Coat 5

2.03 Tack Coat 5

2.04 Seal Coats (Other Than Slurry Seal) 5

2.05 Fog Seal Coat 5

2.06 Asphalt Concrete 5

2.07 Portland Cement Concrete 5

Part 3 - Execution 6

3.01 General 6

3.02 Maintaining Traffic And Public Safety 6

3.03 Pavement Cutting 6

3.04 Placement Of Aggregate Base 7

3.05 Street Cleaning 7

3.06 Preparation Of Existing Asphalt Concrete 7

3.07 Prime Coat 9

3.08 Tack Coat 9

3.09 Seal Coat (Other Than Slurry Seal) 9

3.10 Fog Seal Coat 10

3.11 Placement Of Asphalt Concrete 10

3.12 Asphalt Berm 10

3.13 Adjusting Manhole, Valve And Survey Monument Covers To Grade 10

SECTION 02500 - PAVING AND SURFACING

PART 1 - GENERAL

1.01 WORK INCLUDED

A. Work under this Section shall consist of furnishing all labor, material, equipment, tools, and services required for the placing and compacting of asphalt concrete pavement for roadways, berms, parking lots, and walkways to the lines, grades, and dimensions shown on the drawings and as specified herein.

B. Also included shall be the repair and resurfacing of existing roadway and area paving damaged or removed during construction.

C. Also included shall be application of prime coat over aggregate base surfaces and tack coat over existing asphalt concrete and concrete surfaces adjacent to the new paving.

D. Seal coats as specified.

1.02 RELATED REQUIREMENTS

A. Section 01340, *"Submittals"*

B. Section 01410, *"Testing Laboratory Services"*

C. Section 02453, *"Traffic Signals"*

D. Section 02510, *"Crack Sealing"*

E. Section 02520, *"Slurry Seal"*

F. Section 02580, *"Traffic Striping and Signing"*

G. Section 03300, *"Minor Concrete"*

1.03 REFERENCE STANDARDS

A. State Specifications

B. The Contractor shall comply with the requirements of the Bay Area Air Quality Management District concerning cutback asphalt paving materials and application.

1.04 QUALITY ASSURANCE

The contractor's attention is directed to Article 8 of the City's General Conditions (Section 00700). To validate that specified final elevations have been provided, the contractor shall provide to the City applicable grade certificates as required by Article 8. No separate payment will be made for providing such certification. All cost therefore shall be included in the various work item(s) requiring certification.

1.05 MEASUREMENT AND PAYMENT

A. Unless otherwise specified in the Special Provisions, measurement and payment for paving and surfacing items of work will be as specified herein.

B. Aggregate Base

1. Measurement and payment will be on a ton basis with the truck load slip for each delivery presented to the inspector before unloading.

   a. All slips shall show the supplier, net weight, identification mark of carrying vehicle and time of loading.

   b. The contract price per ton of aggregate base shall include full compensation for furnishing all labor, materials, tools, equipment, and incidentals for doing all work involved in the delivery spreading, and compaction of the base aggregate, complete in place, as shown on the plans and specified in these specifications and directed by the Engineer.

C. Planing Asphalt Concrete Pavement

1. Planed asphalt concrete pavement will be measured by the square foot or square yard per specified width. The quantity to be paid for will be the actual required area of surface planed irrespective of the number of passes required.

2. The contract price paid per square foot or square yard for planing asphalt concrete pavement shall include full compensation for furnishing all labor, materials, tools, equipment, and incidentals, and for doing all work involved in planing asphalt concrete surfacing and immediately disposing of material removed, as specified in these specifications and as directed by the Engineer.

D. Heating and Scarifying

1. Payment for this work will be included in the cost for asphalt concrete unless separately itemized in the bid schedule.

2. If separately itemized in the bid schedule, the quantity to be paid for will be the actual surface area to be heated and scarified. Payment then will be made by the square foot or square yard and shall include full compensation for furnishing all labor, equipment, tools, material, traffic control, and cleanup, for heating and scarifying as shown on the plans and as specified in these specifications and the Special Provisions.

E. Prime Coat

1. Payment for this work shall be included in the cost of asphalt concrete unless specifically itemized in the bid schedule.

2. If specifically itemized in the bid schedule, measurement will be by the square foot or square yard. The quantity to be paid for will be the actual area applied. The contract price paid per ton for Prime Coat, if itemized, will include full compensation for furnishing all labor, material, tools, equipment, and incidentals, and for performing all work involved in the application of the prime coat.

F. Tack Coat

1. Payment for this work shall be included in the cost for asphalt concrete unless specifically itemized in the bid schedule. If specifically itemized in the bid schedule, measurement shall be by the ton. The quantity to be paid for will be the actual number of tons applied.

2. The Contract price paid per ton for Tack Coat, if itemized, will include full compensation for furnishing all labor, material, tools, equipment, and incidentals, and for doing all work involved in the application of the tack coat.

G. Seal Coats (Other Than Slurry Seal)

1. Measurement for payment will be by the ton, square foot or square yard, whichever unit is designated in the bid schedule. Provision of asphalt emulsion and water for mixing with asphaltic emulsion is included in the above prices and payments.

2. Payment will include full compensation for furnishing all labor, material, tools, equipment, and incidentals, and for doing all work involved in the application of the seal coat, complete in place.

3. Measurement and payment for Slurry Seal will be as specified under Section 02520.

H. Fog Seal Coat (When Specified)

1. Measurement for payment will be by the ton or by the square foot or square yard, as specified. The quantity to be paid for will be the actual area applied.

2. Payment will include full compensation for furnishing all labor, material, tools, equipment, and incidentals, and for doing all work involved in the application of the fog seal coat.

I. Asphalt Concrete

1. Measurement and payment will be on a ton basis with the truck load slip for each delivery presented to the inspector before unloading. All slips shall show the supplier, net weight, identification mark of carrying vehicle and time of loading.

2. The contract price per ton shall include full compensation for furnishing all labor, materials, tools, equipment, and incidentals for doing all work involved in constructing asphalt concrete, complete in place, as shown on the plans and as specified in these specifications, and as directed by the Engineer.

3. Contractor shall control the asphalt concrete quantity so that it is to the thickness as specified on the plan. Any extra asphalt concrete placed that exceeds ten percent (10%) of the calculated quantity shall be borne by the contractor.

J. Asphalt Berm

1. Measurement and payment will be by the linear foot of the size and type of berm constructed, and shall include full compensation for furnishing all labor, materials, tools, equipment and other incidentals, for constructing the berm, complete in place, as called for on the plans and specified in these specifications, and as directed by the Engineer.

K. Street Cleaning

1. Payment for this item will be included in the various bid items for asphalt paving.

1.06 SUBMITTALS

A. Submit the following under the Product (Information) category.

1. Furnish samples of construction materials, without additional cost to the City, in quantities specified in Section 01340, *"Submittals,"* and Section 01410, *"Testing Laboratory Services."* The Contractor shall cooperate with the Engineer and furnish necessary facilities for sampling and testing of all materials and workmanship. All materials furnished and all work performed shall be subject to the City's inspection, and no materials shall be used in the construction work until it has been approved by the Engineer.

2. The Contractor shall submit a signed verification from each source of supply for each construction material employed on the project, indicating that the materials meet the Specification requirements.

3. Mix design for asphalt concrete.

PART 2 - PRODUCTS

2.01 AGGREGATE BASE

A. Aggregate bases shall consist entirely of Class 2 material, as set forth in Section 26-1.02B, *"Class 2 Aggregate Base,"* of the *State Specifications*.

B. Maximum aggregate size shall be one and one-half inches (1-1/2") except that when lifts are less than six inches (6"), maximum aggregate size shall be three-fourths inches (3/4").

C. Contractor shall provide supplier certifications concerning the gradation and durability of the aggregate base. Compaction and other tests will be done by others.

2.02 PRIME COAT

A. Material for prime coat shall consist of MC-70 conforming to the requirements of Section 93, *"Liquid Asphalts,"* of the *State Specifications*.

2.03 TACK COAT

A. Material for tack coat shall consist of SS1h or SS1, conforming to the requirements of Section 94, *"Asphaltic Emulsions,"* of the *State Specifications*, or AR-1000, conforming to the requirements of Section 92, *"Asphalts,"* of the *State Specifications*.

2.04 SEAL COATS (OTHER THAN SLURRY SEAL)

A. Material for seal coat shall consist of CSS1h, or SS1h conforming to the requirements of Section 94, *"Asphaltic Emulsions,"* of the *State Specifications*. Aggregate cover shall consist of one of the screening gradations specified in Section 37-1.02, *"Materials,"* of the *State Specifications*. Seal coat type shall be as specified in the Special Provisions.

2.05 FOG SEAL COAT

A. Material for fog seal coat shall consist of SS-1h or SS-1, conforming to the requirements of Section 94, *"Asphaltic Emulsions,"* of the *State Specifications*.

2.06 ASPHALT CONCRETE

A. Material for asphalt concrete or plant mix shall be furnished and placed in strict conformance with Section 39, *"Asphalt Concrete,"* of the *State Specifications*. Asphalt binder shall conform to the requirements of Section 92, *"Asphalts,"* of the *State Specifications*. Aggregate shall be either Type A or Type B. However, maximum aggregate size shall be one-half inch (1/2"), unless otherwise specified. For lifts of one inch (1") or less compacted thickness, and when material is placed by extrusion, maximum aggregate size shall be three-eighths of an inch (3/8").

2.07 PORTLAND CEMENT CONCRETE

A. Concrete shall conform to Section 03300, *"Minor Concrete,"* of these Specifications.

PART 3 – EXECUTION

3.01 GENERAL

A. These specifications shall cover newly paved areas, as well as existing pavement restoration.

B. Where trenching or other construction activity has resulted in damage to a localized area of pavement, the damaged pavement surface shall be cut back six inches (6") beyond the damaged area.

C. Where the damaged area extends over more than fifty percent (50%) of the road width or paved area, as determined by the Engineer, the full pavement width or area shall be saw cut, excavated, removed and repaired.

D. All city owned structures such as valve boxes, manhole frames and covers and monuments within the resurfaced areas shall be adjusted to the new grade, as necessary.

Spraying of liquid asphalts and coatings will not be permitted on windy days (in excess of fifteen miles per hour (15 mph).

3.02 MAINTAINING TRAFFIC AND PUBLIC SAFETY

A. During the paving operations, the Contractor shall furnish and place sufficient barricades at all cross streets to protect new surfacing from traffic until sufficiently cooled, as well as "DETOUR" signs one (1) block away from all impassable intersections. At least one (1) lane of through traffic shall remain open, and sufficient traffic cones placed between the through lane and the freshly surfaced lane to prevent traffic from using the freshly surfaced lane until sufficiently compacted and cooled.

B. Spreader and other equipment shall be moved only on truck or trailer with pneumatic tires.

C. In all cases, the Contractor shall be responsible for the complete protection of new surfacing from traffic until sufficiently compacted and cooled.

3.03 PAVEMENT CUTTING

A. After backfilling and prior to paving, proper tools and equipment shall be used in marking and breaking so that the pavement shall be cut on neat straight lines parallel to the trench or roadway centerline. The asphalt pavement shall be saw cut using a concrete saw to a minimum depth of two inches (2") or one-half (1/2) the thickness thereof, whichever is greater. The pavement shall be cut back twelve

inches (12") on each side of the trench or excavation wall. Any pavement damaged outside these lines shall be recut and restored at the expense of the Contractor. Should voids develop under existing pavements during construction, the affected pavement shall be neatly saw cut in straight lines and replaced after the voids have been filled.

B. All water generated from pavement cutting shall be contained and treated for sediment removal (through filtration or sedimentation) prior to discharge to the City storm drain.

3.04 PLACEMENT OF AGGREGATE BASE

A. Aggregate bases shall be placed and compacted in accordance with Section 26, *"Aggregate Bases,"* of the *State Specifications*.

3.05 STREET CLEANING

A. Contractor shall clean the streets to be resurfaced prior to planing of six-foot (6') wide strips adjacent to gutters and twenty-foot (20') wide transverse conform strips. Extensive cracking, potholes, and local depressions not indicated in the drawing to be repaired by Contractor will be repaired by City forces prior to resurfacing.

B. The Contractor shall inspect the streets prior to his work and shall not proceed until they are cleaned to the City's satisfaction.

3.06 PREPARATION OF EXISTING ASPHALT CONCRETE

A. Planing Asphalt Concrete Pavement

1. Existing asphalt concrete shall be planed at the locations and to the dimensions shown on the plans or field marked by the engineer and in accordance with these Specifications.

2. Planing asphalt concrete pavement shall be performed by cold planing. The cold planing machine shall have a cutter head at least thirty inches (30") wide and shall be operated so as not to produce fumes or smoke.

3. Care shall be exercised to protect wiring of existing traffic detector loops from damage. The Contractor shall request City staff to identify existing traffic detection loops in the field. Loops damaged by the Contractor, even if not located by the City, shall be replaced per Section 02453, *"Traffic Signals,"* of these Specifications.

4. The depth, width, and shape of the cut shall be as indicated on the typical cross sections or as directed by the Engineer. The final cut shall result in a uniform surface conforming to the typical cross sections. The outside lines of the planed area shall be neat and uniform. The road surfacing to remain in place shall not be damaged in any way.

5. Planed widths of pavement shall be continuous except for intersections at cross streets where the planing shall be carried around the corners and through the conform lines or as shown on the plans.

6. Planing adjacent to existing manhole or other street boxes shall be within 6" minimum of the structure. Structures that are damaged as a result of Contractor activity shall be repaired or replaced to pre-construction condition at no cost to the City.

7. The material planed from the roadway surface, including material deposited in existing gutters or on the adjacent traveled way, shall be immediately removed from the site of the work, and hauled and stockpiled at the location designated by the Engineer. The removal crew shall follow within fifty feet (50') of the planer, unless otherwise directed by the Engineer.

E. Heating and Scarifying

1. The existing street surface indicated on the plans to be heated and scarified shall be heated by a mobile surface heater with lateral and vertical controls. These controls shall be used to control the application of heat to the desired location and prevent damage to adjacent concrete gutters. Additionally, the Contractor will protect trees and other planting from heat damage.

2. The asphalt binder shall not be charred in excess of one tenth of one percent (0.10%) and the scarified surface must show live asphalt cement as a result of the applied heat.

3. At least fifty percent (50%) of the existing top two inches (2") of aggregate of the pavement being remixed shall be moved by spinning or tumbling, thus providing for the filling of cracks and turning over the work or dried faces which have lain upward. The asphalt paving remixer shall be adjustable from three and a half feet (3-1/2') to twelve feet (12') in width, and passes shall be six inches (6") wider than the spreader following. The remixer shall also be of a type to remix depressions in the pavement to a depth of at least two inches

   (2"). The remixer shall be of the Therma-Bond type, Rola-Burner type, or approved equal. Immediately after the application of heat, the remixer shall pass over the heater surface and remix to a minimum depth of one half inch (1/2").

4. The pavement remixer shall be adjustable in width and depth of application, and the remixed surface shall be uniformly and evenly spread without scattering, ridging, or breaking of the mineral aggregate.

5. Following the remixing, a tack coat of SS-1h grade of emulsion (Asphalt Institute designation) shall be applied in accordance with Sections 39, "Asphalt Concrete," and 94, "Asphaltic Emulsion," of the State Specifications at the minimum rate of one-tenth (1/10) gallon per square yard by a distributor truck meeting the State Specifications. Immediately following the tack coat and while the remixed surface is in a softened state, asphalt concrete shall be placed. No surface shall be allowed to stand after heating, remixing, and application of tack coat, for such a period of time as to prevent proper compaction and bonding of the remixed material and the new course of plant-mixed surfacing.

6. No traffic shall be allowed to run on the scarified, remixed, tack-coated or overlayed surface, until pavement is final-rolled and cooled below 150°F.

7. Should work be stopped before placing of the plant-mixed surface due to inclement weather, unavailability of asphalt concrete material, work stoppage at the end of the working day, etc., the surface shall be reheated and remixed at the Contractor's expense.

3.07 PRIME COAT

A. Prime Coat shall be applied to all aggregate base prior to laying asphaltic surfacing. It shall be applied in accordance with Sections 39-4.02, "Prime Coat and Paint Binder," and 93-1.03, "Mixing and Applying," of the State Specifications.

3.08 TACK COAT

A. A tack coat (binder coat) shall be applied to existing asphaltic or concrete surfaces that are to receive an asphaltic overlay. Asphaltic pavement which has been exposed to the weather less than thirty (30) days need not be tack-coated. Tack coat shall be applied at a rate of two hundredths (0.02) to one tenth (0.10) gallon per square yard, in accordance with Section 39-4.02, "Prime Coat and Paint Binder," of the State Specifications.

3.09 SEAL COAT (OTHER THAN SLURRY SEAL)

A. Where called for in the plan or Special Provisions, or required by the Engineer, a seal coat shall be applied to new or older pavement. A seal coat shall be applied at the rate of fifteen-hundredths (0.15) to three-tenths (0.30) gallon per square yard immediately followed by aggregate cover. Aggregate cover shall be one-quarter inch (1/4") x No. 10 screening spread uniformly over the area. Screening shall be tightly rolled into binder with a five (5) ton steel-wheeled roller. After four (4) calendar days, excess screenings shall be removed by brooming, without disturbing screenings set in binder.

B. Preparation and placement of seal shall be in accordance with Section 37-1, "Seal Coats" of the State Specifications.

3.10 FOG SEAL COAT

A. A fog seal coat conforming to the requirements of Section 37, "Bituminous Seals" of the State Standard Specifications shall be applied to asphaltic concrete pavements when specified in project plans and specifications. A fog coat shall be applied at a rate between five-hundredths (0.05) to one-tenth (0.10) gallon per square yard.

3.11 PLACEMENT OF ASPHALT CONCRETE

A. Spreading and compacting of asphalt concrete shall be in accordance with Section 39, "Asphalt Concrete," of the State Specifications.

B. Pavement width and location for Collector Streets (42 feet curb to curb) and Arterial Streets (greater than 42 feet curb to curb). To assure that the pavement seam is not placed in the vehicle tire path, the pavement curb to curb shall be as follows:

1. Collector Streets – Pavement seam shall be on centerline of street. Pavement width shall be a minimum of 12 feet wide either side of centerline, i.e., four (4) pavement widths are required to pave a collector street.

2. Arterial Street – Pavement seam shall be on centerline of street. Pavement width shall be a minimum of 12 feet wide either side of centerline. For divided streets, pavement seams shall match the new lane markings.

3.12 ASPHALT BERM

A. Asphalt berms shall be placed by using an extrusion machine. Berm dimensions shall be as indicated on the plans, and shall be laid true to line and grade, and of the required surface texture.

3.13 ADJUSTING MANHOLE, VALVE AND SURVEY MONUMENT COVERS TO GRADE

A. The location of these structures, if shown on the plans, is approximate only. It shall be the Contractor's responsibility to suitably locate them prior to resurfacing.

B. The Contractor shall identify all utilities covered during resurfacing by dimples and curb markings.

C. All City manholes, valve covers, monument box covers, traffic signal covers, and other City service access covers shall be raised within ten (10) calendar days after resurfacing is completed. Water valves and specially designated items must be raised within five (5) working days after paving. The Contractor shall notify Pacific Gas and Electric Company, PacBell Company, cable television companies, and other utilities affected by the resurfacing in writing within twenty-four (24) hours after each street section (block) is paved and provide copies of the same to the Engineer.

D. The monuments themselves shall not be disturbed.

E. If the Contractor elects to raise the manhole cover castings by bricks and mortar, the casting shall be placed to new grade in compliance with these specifications, as outlined for a new casting. Special care shall be exercised not to spill mortar or grout. The inside surface of the raised manhole shall have a mortar finish.

F. Manholes shall be adjusted to grade using three inch (3") thick and six inch (6") thick reinforced concrete grade rings or a combination thereof, from Hanson Concrete Products, Inc. or approved equivalent. If the required adjustment to grade is < three inches (3"), brick and mortar shall be used. If the required adjustment to grade is more than ≥ three inches (3") but < six inches (6"), a three inch (3") thick reinforced concrete grade rings complemented by bricks and mortar shall be used.

End of Section

SECTION 02445 - FENCES AND GATES

CONTENTS:

Part 1 - General 1

1.01 Work Included 1

1.02 Related Requirements 1

1.03 Reference Standards 1

1.04 Quality Assurance 1

1.05 Measurement And Payment 1

Part 2 - Products 2

2.01 Fabric 2

2.02 Posts And Rails 2

2.03 Fastenings 2

2.04 Barbed Wire 3

2.05 Gates 3

2.06 Concrete For Footings 3

2.07 Other Sections 4

Part 3 - Execution 4

3.01 Posts And Rails 4

3.02 Fence Fabric 4

3.03 Barbed Wire 4

SECTION 02445 - FENCES AND GATES

PART 1 - GENERAL

1.01 WORK INCLUDED

A. Work involved includes the furnishing of all materials, labor, tools, and equipment required to install chain link fencing and swing gates as specified in the Special Provisions, on the Project Plans, applicable City Standard Drawings and these Specifications.

1.02 RELATED REQUIREMENTS

A. Section 03300, *"Minor Concrete"*

1.03 REFERENCE STANDARDS

A. State Specifications

B. American Society for Testing and Materials (ASTM)

1.04 QUALITY ASSURANCE

Not used

1.05 MEASUREMENT AND PAYMENT

A. Chain link fence will be determined by the linear foot of actual measurement made parallel to the ground slope. The number of gates will be determined by actual count.

B. Payment shall be made in conformance with the contract price per linear foot, and the size and type of gate, as set forth in the Bid Schedule.

C. Payment shall include all labor, materials, tools, equipment, and incidentals, for doing all work involved in constructing chain link fences and gates, complete in place, as shown on the plans and specifications, and as directed by the Engineer.

PART 2 - PRODUCTS

2.01 FABRIC

A. Chain link fence fabric shall be two inch (2") mesh, Gauge 11 for sixty inches (60") or less wide, and Gauge 9 for over sixty inches (60") wide, hot-dipped galvanized conforming to ASTM A 392, *"Zinc-Coated Steel Chain-Link Fence Fabric,"* with Class II zinc coating (2 ounces per Square Foot). Fabric shall have knuckled top and twisted bottom selvages.

B. Chain link fence fabric with three and one-half inch (3-1/2") mesh, Gauge 9, shall be used when redwood slat inserts are required on the Plans and specified in these specifications.

C. Vinyl covered fabric with two inch (2") mesh, 9 Gage, hot-dipped galvanized, shall be used where shown on the Plans. Polyvinyl Chloride coating shall have a minimum thickness of seven mils (0.007") and shall be bonded to chain link fence by the fusion method.

D. Overall fence height shall be as indicated on the plans.

2.02 POSTS AND RAILS

A. Posts and rails shall be hot-dipped galvanized standard pipe, Schedule 40, as per ASTM A 120, *"Pipe, Steel, Black and Hot-Dipped Zinc-Coated (Galvanized) Welded and Seamless, For Ordinary Uses."* End corners and pull posts shall be two and one-half inch (2-1/2") nominal pipe size. Line posts shall be two-inch (2") nominal pipe size. All posts shall be provided with rainproof tops.

B. Top rails shall be hot-dipped galvanized standard pipe, one and one-quarter inch (1-1/4") nominal pipe size, Schedule 40.

C. Bottom of fence shall be provided with 7 Gage hot-dipped galvanized tension wire conforming to ASTM A 227, *"Steel Wire, Cold Drawn, For Mechanical Springs,"* or a one and one-quarter inch (1-1/4") pipe, Schedule 40, when shown on the Plans.

D. Post tops, extension arms, stretcher bars and other accessories and fittings shall be steel or malleable iron or wrought iron and shall be galvanized after fabrication conforming to ASTM 116, *"Zinc-Coated (Galvanized) Steel Woven Wire Fence Fabric,"* Class 3 weight of coating.

2.03 FASTENINGS

A. Fabric shall be fastened to posts, rails, and tension wires, using fabric ties of aluminum-alloy wire:

1. Line Posts: 6 Gage fabric ties at fourteen-inch (14") spacing.

2. Top Rails: 6 Gage fabric ties at twenty-four inch (24") spacing.

3. Tension Wire: 9 Gage galvanized coil spring steel wire hog rings at twenty-four inch (24") spacing.

4. Stretcher Bars: One-quarter inch by three-quarter inch (1/4" x 3/4") flat bars shall be used to stretch the fabric at terminal and corner posts. Bars shall be attached to the posts with one-inch (1") wide steel band and three-eighth inch (3/8") diameter bolts and nuts.

2.04 BARBED WIRE

A. Barbed wire, where required in the plans, shall conform to ASTM C 121, *"Zinc-Coated (Galvanized) Steel Barbed Wire,"* Class B, 12-1/2 Gage wire with 4-point round barbs, and shall be attached to the top of the posts and gates with galvanized steel extension arms.

2.05 GATES

A. Gate frames shall be all welded construction and shall be hot-dipped galvanized after construction. Top and bottom rails and vertical members shall be one and one-half inches (1-1/2") nominal size, Schedule 40 steel pipe.

B. On gates more than eight feet (8') wide, equally spaced interior vertical members of one and one-half inches (1-1/2") nominal size pipe, Schedule 40 galvanized steel pipe shall be added such that no gate frame panel will be more than eight feet (8') wide.

C. Gates shall be furnished with all necessary galvanized hardware including hinges, latches, and stops. Swing gate panels shall be cross-trussed with three-eighths inch (3/8") diameter truss rods with turnbuckles. Gates shall be hinged to swing open one hundred eighty (180°) degrees, and shall be furnished with keepers and plunger bars.

D. Gates that provide emergency access for the Fire Department shall be a minimum of 12 feet wide.

E. All motorized gates shall be provided with manual override.

2.06 CONCRETE FOR FOOTINGS

A. Concrete for footings shall be Class B, containing five (5) bags of Portland cement per cubic yard, mixed with one inch (1") maximum size aggregate, maximum three inch (3") slump, producing minimum strength of 2,500 psi at twenty-eight (28) days.

2.07 OTHER SECTIONS

A. For reasons of uniformity and appearance, these specifications require use of pipe sections. Alternate shapes may be considered if submitted for approval within five (5) working days before bid date, and are accompanied by strength calculations indicating equal or superior characteristics to those specified.

PART 3 - EXECUTION

3.01 POSTS AND RAILS

A. All posts shall be embedded into the ground as per *Standard Drawing No. M-03*. Line posts shall be evenly spaced ten feet (10') or less apart. Allow concrete footings to cure for seven (7) days before installing fence. Top rails shall pass through line post tops and form a continuous brace within stretch and be securely fastened to terminal posts. Splices in top rail shall be made with couplings.

3.02 FENCE FABRIC

A. Fence fabric shall be stretched and securely fastened to the outward side of the posts with the lower edge at the ground level.

3.03 BARBED WIRE

A. Barbed wire shall be installed where required on the plans. Barbed wire shall be stretched with mechanical equipment. Number of strands shall be as required on the plans.

End of Section

SECTION 02453 - TRAFFIC SIGNALS

CONTENTS:

Part 1 - General 1

1.01 Work Included 1

1.02 Related Requirements 1

1.03 Reference Standards 1

1.04 Quality Assurance 1

1.05 Measurement And Payment 1

1.06 Submittals 1

1.07 Warranties, Guarantees, And Instruction Sheets 2

1.08 Schedule Of Work 2

Part 2 - Products 3

2.01 Controller Assembly And Auxiliary Equipment 3

2.02 Standards, Steel Pedestals And Posts 3

2.03 Vehicle Signal Faces And Signal Heads 3

2.04 Vehicle Detectors 4

2.05 Conduit 9

2.06 Pull Boxes 9

2.07 Pedestrian Signals 10

2.08 Pedestrian Push Button 10

2.09 Audible Pedestrian Signals 10

2.10 Foundations And Footings 10

2.11 Conductors And Wiring 11

2.12 Pull Rope 11

2.13 Internally Illuminated Street Name Signs 11

2.14 Service 14

TABLE OF CONTENTS continued:

Part 3 - Execution 14

3.01 Controller Assembly And Auxiliary Equipment 14

3.02 Standards, Steel Pedestals And Posts 14

3.03 Vehicle Signal Faces And Signal Heads 15

3.04 Painting 15

3.05 Video Detection System - Installation and Training 15

3.06 Vehicle Detectors - Inductive Loops 15

3.07 Conduit 17

3.08 Pull Boxes 17

3.09 Pedestrian Signals 17

3.10 Pedestrian Push Buttons 17

3.11 Foundations and Footings 18

3.12 Conductors and Wiring 18

3.13 Internally Illuminated Street Name Signs 19

3.14 Underground Electric Service 19

3.15 Testing 19

SECTION 02453 - TRAFFIC SIGNALS

PART 1 - GENERAL

1.01 WORK INCLUDED

A. The repair, modification, or installation and testing of new fully actuated and functioning traffic signal system, including signal cabinet, controller, electric service equipment, and related signal hardware at the specified intersections.

B. The repair and restoration of damaged signal loops, conduits and equipment.

1.02 RELATED REQUIREMENTS

A. Section 03300, *"Minor Concrete"*

B. Section 16550, *"Street Lighting System"*

1.03 REFERENCE STANDARDS

A. State Specifications

1.04 QUALITY ASSURANCE

Not used

1.05 MEASUREMENT AND PAYMENT

A. The Lump Sum or unit bid prices for traffic signals as set forth on the bid Proposal, shall include total compensation for furnishing and installing fully functioning traffic signals, intersection lighting, internally illuminated street name signs, vehicle/pedestrian detectors, signal controllers and electric services, complete with all required labor, materials, tools and equipment for performing all work to provide complete installations, all as applicably required and shown on the plans and as specified herein; and as directed by the Engineer, including all required, associated traffic signal conduits, conductors, and pullboxes.

1.06 SUBMITTALS

A. Equipment list and drawings shall conform to Section 86-1.03, *"Equipment List and Drawings,"* of the *State Specifications* and these specifications.

B. The Contractor shall submit to the Engineer, within ten (10) working days after the contract award, a minimum of eight (8) copies of a list of equipment and materials proposed for installation.

C. The Contractor, upon completion of the project, shall furnish "As-Built" drawings, including the controller cabinet wiring on a reproducible photo Mylar in accordance with Section 01730, *"Operating and Maintenance Data,"* and other submittals.

1.07 WARRANTIES, GUARANTEES, AND INSTRUCTION SHEETS

A. Warranties, guarantees and instruction sheets shall conform to Section 86-1.04, *"Warranties, Guarantees and Instruction Sheets,"* of the *State Specifications* and Section 01740, *"Warranties and Bonds," of* these specifications.

B. If traffic signal and street lighting systems installed under these specifications, including all equipment, and appurtenances furnished or performed in connection therewith, are found to be defective in materials or workmanship within the guarantee period and it is representative that said part (or parts) cannot be repaired satisfactorily on the site, the Contractor shall immediately provide a replacement part (or parts) of equal kind and/or type during the repair period. The Contractor shall be responsible for the removal, handling, repair or replacement, and reinstallation of the part (or parts) until such time as the traffic signal system is functioning as specified and as intended herein; the repair period shall in no event exceed seventy-two (72) hours, including acquisition of parts. The guarantee on the repaired or replaced parts shall again commence with the date of reassembly of the system.

C. The video detection system shall be warranted against manufacturing defects in materials and workmanship for a period of two years from date of the City's acceptance. The Video Detection Supplier shall provide all documentation necessary to maintain and operate the system.

1.08 SCHEDULE OF WORK

A. Scheduling of work shall conform to the provisions in Section 86-1.06, *"Scheduling of Work,"* of the *State Specifications* and these specifications.

B. The Schedule of Work shall be submitted to the Engineer for his approval prior to commencing work. Work shall include, in addition to other requirements, all dates, activities, and other pertinent data necessary to describe the Contractor's proposed activities on the project concerning the installation of a traffic signal and highway lighting system. The Schedule shall include, but shall not necessarily be limited to, the following items pertaining to the installation of a traffic signal and highway lighting system:

1. Conduit and Conductor Installation

2. Erection of Signal Standards

3. Detector Systems Installation and Test

4. System Test/Controller Test

5. Job Ready for Acceptance and Scheduling

6. The Schedule shall also include all other major items of work.

7. Signal Turn-On

No on-site above ground signal equipment shall be installed until the Contractor has received all signal equipment, installed all conduit runs, and pull boxes set to grade and the signal controller has been tested and approved by the Engineer.

PART 2 - PRODUCTS

2.01 CONTROLLER ASSEMBLY AND AUXILIARY EQUIPMENT

A. Shall conform to Section 86-3, *"Controller Assemblies"* of the *State Specifications* and these specifications. Unless otherwise specified, the controller shall be a Type 170 Controller and shall include all required software. Both controller and software shall be of a type and manufacture specified by the City, installed in a Type 332, or at the City's option, specify a Type 333 cabinet pre-wired as specified in the Special Provisions and Project Plans.

2.02 STANDARDS, STEEL PEDESTALS AND POSTS

A. Standards, steel pedestals, and posts shall conform to the provisions in Section 86-2.04, *"Standards, Steel Pedestals and Posts"* of the *State Specifications* and these specifications.

B. Anchor bolts shall be hot dipped galvanized over entire length.

C. All standards, steel pedestals, and posts shall be galvanized, and shall not be painted.

D. 1B poles shall have two (2) notched steel locknuts for 4" rigid conduit installed before the base flange.

Locknuts are to be tightened against the base flange to prevent pole rotation.

E. Flange is to be cast iron.

2.03 VEHICLE SIGNAL FACES AND SIGNAL HEADS

A. Signal faces, signal heads and auxiliary signal hardware, shall be polycarbonate (plastic) as manufactured by Econolite, or approved equivalent, as shown on the plans, and the installation thereof, shall conform to the provisions in Sections 86-4.01, *"Vehicle Signal Faces,"* 86-4.02, *"Directional Louvres,"* 86-4.03, *"Backplates,"* and 86-4.06 *"Signal Mounting Assemblies,"* of the *State Specifications* and these specifications, except that plastic reflectors, plastic signal

section housings, plastic signal sections, plastic signal lenses, and plastic visors, shall not be used unless authorized by the Engineer. Backplates shall be metal. It shall be painted the color Blue, as manufactured by BEHR paints under product type "DEEP BASE (8300)".

New vehicle signal head installations shall be fitted with ASTRO-BRAC clamp kit with mark 1 terminal compartment (cable mount) or approved equivalent.

B. All mounted signal faces and all arrow indications signal faces shall be provided with twelve inch (12") sections and louvered metal backplates as manufactured by Econolite, Inc.

C. All indications to include Red, Amber, and Green shall be the Light Emitting Diode (LED) type.

D. LED indicators shall be the latest version of LUMILEDS by the Dialight Corporation, or equal.

E. Painting of electrical equipment shall conform to the provisions of Section 86-2.16, "Painting" of the State's Standard Specifications.

2.04 VEHICLE DETECTORS

A. Video Vehicle Detection System: These technical specifications describe the minimum physical and functional properties of a video detection system. The system shall be capable of monitoring all licensed vehicles on the roadway, providing video detection for areas outlined in the construction drawings. The entire video detection system shall consist of the following:

- Video Image Processing unit(s).
- Video camera(s) with IR filter, enclosure and sunshield.
- Camera lens.
- Surge suppressor.
- All other necessary equipment for operation.

All vehicle detection shall be video based unless otherwise shown on plans. The latest version of Traficon Video Detection System, or approved equivalent, shall be used and shall conform to the provisions in Section 86-5.01, *"Vehicle Detectors"* of the *State Specifications* and these specifications.

The entire video vehicle detection system shall consist of the following:

- Video Detection Module(s)
- Video Camera(s) with IR filter, lens, enclosure, and sun shield
- Luminaire Arm or Signal Mast Arm Sensor Bracket(s)
- Surge Suppressor
- Programming Devices and/or software
- Coaxial/Power Cable

- All other necessary equipment for operation
- Training for installation, operation, & maintenance

1. Video Detection System

   a. The **V**ideo **I**mage **P**rocessor (VIP) shall be modular by design and housed in either a self-contained stand-alone unit or fit directly into NEMA TS1 & TS2 type racks as well as Type 170/179 input files. The VIP shall be interchangeable between a shelf or rack mount installation without replacing or modifying existing the VIP units.

   b. The system shall control from 1 to 4 VIP boards allowing for 1 to 8 image sensors.

   c. The system shall be designed to operate reliably in the adverse environment of roadside cabinets and shall meet or exceed all NEMA TS1 and TS2, as well as Type 170/179 environmental specifications.

   d. Ambient operating temperature shall be from –35 to +75 degrees Centigrade at 0 to 95% relative humidity non-condensing.

   e. The system shall be powered by 12-40 VDC and draw less than 2 amperes.

   f. The system shall utilize cabinet 24 VDC for rack mount installations or external 24 VDC for stand-alone shelf installations.

   g. Surge ratings shall be set forth in the NEMA TS1 and TS2 specifications.

   h. Serial communications shall be through an RS232 serial port. This port can be used for communications to a modem or laptop to upload/download detector configurations, count data and software upgrades. RS485 on the rear edge connector shall facilitate communications to other VIP boards.

   i. Each VIP board shall have 4 opto-isolated open collector outputs. Twenty (20) additional outputs shall be available via the expansion port. The outputs shall be programmed for signaling the presence, the arrival or the departure of vehicles in a minimum of 48 detection zones.

   j. Each VIP board shall allow for 20 digital inputs via the I/O Expansion port.

   k. Each VIP board shall have error detection. An output contact will open if the video signal is bad or the VIP board is not functioning properly. A user defined quality level will automatically put the VIP into a recall state in cases of severe degraded visibility (i.e., fog, blizzard, etc.). Normal detection resumes when visibility improves above the user defined quality level.

   l. Operator selectable recall shall be available via the VIP front panel.

m. A video select button on the VIP front panel will switch between camera images of the VIP.

n. The VIP board shall have 2 video inputs (RS-170 NTSC or CCIR composite video) and one video out.

o. The VIP board shall have a reset button on the front panel to reset video detectors to "learn" the roadway image. Learning time of video detectors shall be less than 10 seconds.

p. External surge suppression, independent of the VIP board shall separate the VIP from the image sensor.

q. The VIP board shall have separate light emitting diodes (LEDs) that indicate:

POWER	Red to verify power supply.
I/O COMM	Red to indicate communications to expansion boards.
VIDEO 1 & 2	Red to verify the presence of video input 75 Ohm.
TX & RX	Red to indicate communications via the serial port.
OUT1- OUT4	Green if the corresponding detection group is active.

The VIP board shall also have 2 separate buttons for:

VIDEO SELECT	
RECALL	Manually places call on detectors.
RESET	Manually reset detectors to "learn" new background.

The VIP board shall also have a video out female RCA style connector, DB9 female Service port and DB9 I/O Expansion port.

r. The VIP Expansion board shall also have separate LEDs that indicate:

POWER	Red to verify power supply.
COMM	Red to indicate communications to VIP board.
I/O1- I/O4	Green if the corresponding detection group is active.

The VIP Expansion board shall have 8 dip switches that define inputs and outputs used (range: 1-12 or 13-24).

2. FUNCTIONAL CAPABILITIES

a. Each VIP board shall be capable of processing the video signal of one camera. The video signal shall be analyzed in real time (30 times per second).

b. The system shall be expandable up to 8 cameras that may be connected to different VIP units and programmed independently.

c. The system shall be capable of displaying detectors on the video image with associated outputs. Outputs/Inputs status will be indicated on the screen. Parameters will also include the ability to view raw video without any verbiage and/or detectors for surveillance purposes.

d. Each VIP board will detect within the view of the connected camera the presence of vehicles in user defined zones. Detectors available shall be presence, count, delay, extension, or pulse mode of either arrival or departure of vehicles. Delay and extension shall be defined between .1 - 99 seconds and pulse mode between 20ms-100ms in 20ms increments.

e. The VIP board shall be programmed without the use of a supervisor computer. A standard CCTV monitor and keypad plugged into the VIP serial port will facilitate detector programming.

f. The VIP board shall store up to 4 detector configurations. It shall be possible to switch between detector configurations manually or automatically by time of day or input from the traffic controller.

g. Via the serial port, detector configurations can be uploaded to a laptop and stored on disk.

h. Detectors may be linked to 24 outputs and 20 inputs using Boolean Logic features: AND, OR, NOT. It will be possible to generate conditional outputs based upon inputs from a controller.

i. It shall be possible to make a detector directional sensitive. Options will include an omni-directional detector or a detector that only senses movement: from right to left, left to right, up to down or down to up as you look at the monitor.

j. To facilitate "fine tuning" of detection zones a maximum of 10 lines and a minimum of 4 lines may be adjusted within the confines of the detector.

k. All detectors and parameters can be changed without interrupting detection. For example: when one detector is modified all existing

detectors continue to operate, including the one that is being modified. When the new position is confirmed, the new detector will enter a learning phase. Once the new detector is in function it will take over the job of the old one. In this way, the detector is always fully operational with no interruption on any detector, even during modification. Learning phases for new detectors shall not exceed 10 seconds.

l. Six detectors per input may be used as count detectors. Count detectors will detect and store count data at user-defined intervals of .5, 1, 5, 10, 15, 30 & 60 minutes. It shall be possible for each VIP board to store up to 4000 intervals of count data in non-volatile memory.

m. Associated software may be used with a PC to download count data and export to a spreadsheet. Software will also be used to upload/download detector configurations and update software versions of the VIP board.

3. IMAGE SENSOR- CAMERA

a. The unit shall be a high resolution, 1/3" or larger image format CCD camera, designed for professional video surveillance systems. Incorporating the latest in CCD technology, the video camera shall provide detailed video without lag, image retention, or geometric distortion.

• Temperature range	-20 to + 55 degrees C	
• Humidity	0% to 95% relative, non-condensing	
• Dimensions	47mm X 47mm X 83mm	
• Weight	200g	
• Camera mounting slots	1/4-20, top and bottom	
• Connectors	BNC for video out	
• Lens mount	CS Power-in / pressure screw Lens / 4-square connector	
• Finish	Off-white semi-gloss polyurethane	
• Construction	All metal housing	
• Rated input voltage	12VDC or 24VAC +/-10% @60Hz	
• Nominal power	6 Watts	
• Imager	Interline transfer CCD 1/3" format	
• Imager spectral response	100% @ 550nm: 30% @ 400nm and 800nm	
• Sync system	EIA RS-170	
• Active picture elements	768 H X 494 V	
• Horizontal resolution	580 TVL	
• Sensitivity (2856 K)	Usable Picture	Full Video

Scene Illumination	fc	0.012	0.08
	lx	0.12	0.8
Imager Illumination	fc	0.0015	0.01
	Lx	0.015	0.1

** F1.2 lens @ 75% highlight*

- Signal to noise ratio — 54 dB minimum
58 dB typical
- AGC — 18 dB
- Light range (AGC on) — 1,000,000:1 min. with f/1.4 to 360 auto-iris lens
- Video out — 1.0 volts peak-to-peak +/- 0.1 volt @ 75 Ohms
- Gray scale — At least 10 steps

B. If inductive loop detectors are indicated on the construction drawings, they shall include the following:

1. Type A Hand Holes

2. Lead-in cable shall be Type B as shown in the *State Specifications*.

2.05 CONDUIT

A. Conduit shall conform to Section 86-2.05A, *"Material,"* of the *State Specifications* and these specifications and shall be made of rigid steel.

B. All conduits shall be new.

C. Insulated bonding bushings shall be required. Bushings shall be installed on conduit ends before pulling in conductors and cables.

D. Conduit size shall be as indicated on the plans.

E. Bonding and grounding jumpers shall be bare #8 stranded copper wire.

F. Conduits entering pull boxes shall terminate at a height from box bottom not to exceed 1/3 interior box height.

2.06 PULL BOXES

A. Pull boxes shall conform to the provisions in Section 86-2.06, *"Pull Boxes,"* of the *State Specifications* and these specifications.

B. All pull boxes shall be of precast reinforced concrete of the size indicated on the construction drawings.

C. Spacing between pull boxes shall not exceed one hundred feet (100').

D. All pull boxes and covers shall be precast reinforced concrete.

E. Covers and lids shall be of the lightweight "Fiberlite" type or approved equivalent and shall be inscribed "TRAFFIC SIGNAL" or "ELECTRIC" for the use intended. If exposed to traffic, covers and pullboxes shall be traffic rated.

F. Where the sump of an existing pull box is disturbed by the Contractor's operations, the sump shall be reconstructed and if the sump was grouted, the old grout shall be removed, and new grout placed.

2.07 PEDESTRIAN SIGNALS

A. Pedestrian signals shall conform to the provisions in Section 86-4.05, *"Pedestrian Signal Faces,"* of the *State Specifications* and these specifications.

B. Pedestrian signals shall be International Symbol Face Message (Type A).

C. Front screens shall conform to Paragraph 2 of Section 86-4.05(B), *"Front Screen,"* of the *State Specifications*.

D. All indications shall be the Light Emitting Diode (LED) type.

2.08 PEDESTRIAN PUSH BUTTON

A. Shall conform to the provisions in Section 86-5.02, *"Pedestrian Push Button,"* of the *State Specifications* and these specifications. Push buttons shall be Type B and shall be of polyethylene material "Bumblebee" brand, or approved equivalent.

B. Shall be post top mounted in median or pedestrian push button post installations.

C. Pedestrian Push Button Signs shall contain the text, colors and symbols shown on applicable City Standard Drawings.

2.09 AUDIBLE PEDESTRIAN SIGNALS

A. Audible pedestrian signals shall be Model APS-10 manufactured by Indicator Controls Corporation, or approved equal.

2.10 FOUNDATIONS AND FOOTINGS

A. Portland cement concrete shall conform to Section 03300, *"Minor Concrete,"* of these Specifications.

B. Foundations shall conform to the provisions in Section 86-2.03, *"Foundations,"* of the *State Specifications* and these specifications.

2.11 CONDUCTORS AND WIRING

A. Conductors and wiring shall conform to the provisions of Section 86-2.08, *"Conductors,"* and Section 86-2.09, *"Wiring,"* of the *State Specifications* and these specifications.

B. Aluminum conductors shall not be substituted for copper conductors.

C. Splice connectors and splicing shall be of an approved UL listed compression type, utilizing "Method B" or high voltage circuit insulation methods as shown on State Plan ES-13.

D. Conductors No. 8 AWG and larger shall be stranded.

E. All signals, including mast arm signal equipment shall be wired and spliced to the nearest pull box. Splicing at signal conductors to other phase conductors on pole is not allowed. All signal heads shall be spliced to the appropriate phase conductor only in the sidewalk pull box indicated on the construction drawings.

2.12 PULL ROPE

A. Pull rope shall be nylon or polypropylene with a minimum tensile strength of five hundred pounds (500#).

2.13 INTERNALLY ILLUMINATED STREET NAME SIGNS

A. General

1. See applicable Special Provisions, Project Plans and/or City Standard Drawings.

2. Internally illuminated street name sign shall conform to the provisions in Section 86-6.065 *"Internally Illuminated Street Name Signs"* of the *State Specifications* and these Specifications.

3. Street name signs shall have a maximum length of six (6) feet, and be four (4) feet wherever feasible.

4. 1/8" diameter steel safety cables with a minimum breaking strength of 1760 lbs. shall be attached to each end of the sign assembly to connect sign to the signal mast arm.

5. ½" strain relief connectors with PVC grummets and knock-out sealing ring cord grips fitting a 0.500"-0.600" electrical cord shall be used to connect electrical cord to sign assembly.

6. PECO Tuf-Flex, 12/3 SEOW-A electrical cord E-25411, or approved equal, with a temperature range of 105 degrees C to minus 50 degrees C shall be used.

B. Sign Construction

1. The sign shall consist of extruded aluminum, top, bottom, and door, cast aluminum ends, sign face or faces and illumination.

2. The door shall open from the top. It shall be held closed by three (3) 1/4-turn airlock fasteners. The door shall have a watertight (PVC) gasket. The door shall have a continuous hinge 1-1/16" (open), Stainless Steel mounting at the bottom of the door. The doors shall have one side removable to gain access to the sign face. The doorframe shall be 0.125-inch thick, extruded aluminum, minimum.

3. The top shall be extruded from 6063-T5 aluminum alloy, or other approved aluminum alloy, with a minimum thickness of 0.140". There shall be drip rails overhanging the sign face to prevent water intrusion.

4. The ends shall be cast from 356 aluminum, or other approved aluminum type, and shall have a minimum thickness of 0.188".

5. Seams connecting the top and bottom to the ends and seams of doorframe shall be Heli-Arc welded to provide weather proof seal.

6. All pop rivets, and hex head indented sheet metal screws shall be stainless steel.

7. Photocontrol shall be the "Dark to Light", Catalog #D124-1.0-SM, locking type with rubber gasket and shall be mounted on a weather proof single gang electrical box attached to the side of the sign.

8. Sockets shall be Kulka #582 and 583, or approved equal, with rubber gasket on the lamp-mating surface to prevent possible water damage. Socket tracks shall be constructed from 0.063" aluminum, minimum thickness and shall be painted white.

9. Reflectors shall be made from 0.20-inch thick aluminum, minimum, and painted white.

10. Back plate shall be made from 0.63-inch thick aluminum, minimum, and painted white.

11. Fluorescent lamps shall be T12-CW-HO Type 800MA.

12. Ballast shall be high output, Valmont 6G3934WF, or equivalent. Ballast shall be placed inside the sign assembly by mounting ballast a minimum of 1/4" from the bottom extrusion.

13. All wiring shall be 600 volt, 90 degree C, soft annealed copper wire.

14. All wire connections shall be made with insulated compression wire nuts.

15. All electrical boxes shall be watertight.

16. Sign shall be equipped with four (4) 3/16" diameter drain holes located in the bottom of the housing (two at each end). Refer to the applicable Daly City Standard Drawing for typical sign assembly.

C. Sign Panel

1. All messages shall be clearly legible, attracting attention under any lighting conditions.

2. Face legend shall consist of a continuous piece of translucent vinyl applied over the polycarbonate sign face.

3. Formed letters shall conform to State Standard Lettering, Series E, for highway signs and shall be a maximum of 8" upper case and 6" lower case letters. Refer to the applicable Daly City Standard Drawing for text sizing and placement.

4. Face Colors --- letters and border shall be white with a blue background.

D. Brackets

1. See applicable Special Provisions, Project Plans and/or City Standard Drawings.

2. All bracket material shall be 6061-T6 Aluminum or better.

3. All hardware shall be Stainless Steel.

4. Top nut of a double-nutted installation shall be Nylock type.

5. Centerline of pole shall be congruous with the centerline of the sign assembly.

6. Unit shall allow swivel up to 75 degrees in both directions.

7. Self-lubricating bushings shall be provided in the hinge.

8. Anti-rotation provisions for pivot bolts shall be provided.

9. Bracket mount shall consist of two (2) 3/16" thick, 3" x5" silicon sealant; 6061-T6 Aluminum, or better, plates, one (1) 1/2" diameter, 4" Stainless Steel bolts; and one (1) Nylock nut.

10. Base bracket shall be held by three (3) bolts and two (2) washers as shown in applicable Daly City Standard Drawing.

11. Center of bracket mounts shall be placed on top of sign assembly 6" from either end of sign assembly as shown in applicable Daly City Standard Drawing.

2.14 SERVICE

A. Service shall conform to the provisions in Section 86-2.11, *"Service,"* of the *State Specifications* and these specifications.

B. Service connection shall be made to the traffic signal system from the approximate location shown on the plans. Service to the traffic signal system shall be Type III AF as shown on *State Plan ES-2B*.

C. A type 2 Corbin Lock shall be used in place of the standard hasp and lock latch.

PART 3 - EXECUTION

3.01 CONTROLLER ASSEMBLY AND AUXILIARY EQUIPMENT

A. Controller assembly shall conform to the provisions in Section 86-3, *"Controller Assemblies,"* of the *State Specifications* and these specifications.

B. The Contractor shall be held responsible for the successful operation of the traffic signal equipment. The Contractor shall assign qualified representatives from the supplier of the controller assemblies to field test installed equipment and to demonstrate, to the satisfaction of the Engineer, that the traffic signal equipment is completely operational in accordance with these specifications, the *State Specifications* and the manufacturer's specifications.

3.02 STANDARDS, STEEL PEDESTALS AND POSTS

A. Standards, steel pedestals, and posts shall conform to the provisions in Section 86-2.04, *"Standards, Steel Pedestals and Posts,"* of the *State Specifications* and these specifications.

B. The sign mounting hardware for mast arm, as shown on Detail U of the *State Standard Plan ES-6T*, shall be installed at the locations shown on the plans.

C. Where the plans refer to mast arm signals, the tip tenon detail shall be used.

D. When a standard or mast arm is relocated, or when a used standard or mast arm is City-furnished, new nuts, bolts, cap screws, and washers shall be provided and, if the standard has a slip base, a new keeper plate shall be provided. New hardware shall conform to the requirements for hardware used with new standards and shall be provided by the Contractor.

3.03 VEHICLE SIGNAL FACES AND SIGNAL HEADS

A. Vehicle signals shall be installed at all locations in accordance with the construction drawings. Location of signal faces and orientation of mounting brackets shall be approved by the Engineer prior to drilling of standard. Adjustment of signal faces shall be as directed and approved by the Engineer prior to Section 86-2.14C, *"Functional Testing,"* of the *State Specifications*.

3.04 PAINTING

A. Painting of electrical equipment and materials shall conform to the provisions of Section 86-2.16, "Painting" of the State's Standard Specifications.

3.05 VIDEO DETECTION SYSTEM - INSTALLATION & TRAINING

A. The product supplier of the video detection system shall supervise the installation and the testing of the video equipment. A factory certified representative from the manufacturer shall be on-site during installation. The factory representative shall install, make fully operational, and test the system as indicated on the intersection drawings and this specification.

B. Two days training shall be provided to personnel of the contracting agency in the operation, setup, and maintenance of the video detection system. Instruction and materials shall be produced for a maximum of 10 persons and shall be conducted at a location selected by the contracting agency. The contracting agency shall be responsible for travel, room and board expenses for its own personnel.

3.06 VEHICLE DETECTORS – INDUCTIVE LOOPS

A. Vehicle detectors shall conform to the provisions in Section 86-5.01, *"Vehicle Detectors,"* of the *State Specifications* and these specifications.

B. Detector loop installation shall commence after all roadway repair work has been completed. Detector loop saw cutting, installation and testing shall occur prior to the roadway resurfacing.

C. In addition to the installation notes, details, and tests indicated on the *State Plans ES-5A and ES-5B*, the following shall apply:

1. Each detector loop shall be coiled clockwise; and

2. Loop lead-in cable from the first pull box to the controller cabinet shall be tagged with the identity of all conductor loops connected to the circuit.

3. Loops within eight feet (8') of existing or proposed curbs shall have a minimum of two inches (2") cover.

D. The Contractor shall install Type 2 conductor loop wires as specified by the State Specifications, and place the approved sealant on the same day that saw cuts are made.

E. The Contractor shall insure compatibility of each inductive loop sensor and its associated loop lead-ins and loops, and shall insure and prove to the satisfaction of the Engineer that the combined system will provide consistent and stable operation and be unaffected by input voltage variations of plus or minus ten percent (10%), common electric and magnetic disturbances, flooding of cable with water, and normal range of temperature, humidity, and other weather and climatic conditions. Any deviation from insuring such compatibility shall be approved by the Engineer prior to installation.

F. In lieu of the requirement in the fourth paragraph of Section 86-5.01A(5), *"Installation Details,"* of the *State Specifications*, slots in asphalt concrete pavement shall be filled as follows:

"After conductors are installed in the slots cut in the pavement, the slots shall then be filled with sealant as approved by the Engineer."

G. Conductor loops shall be installed, soldered connections made and circuits completed through amplifier to controller, and system energized.

H. The test vehicle shall be detected continuously across eight feet (8') of lane width at all conductor loop locations immediately adjacent to a crosswalk or limit line, as shown on the construction drawings, for at least three (3) minutes. For all other conductor loops, except extension type, the test vehicle shall be detected continuously across eight feet (8') of lane width at each loop shown in the construction drawings, for at least ninety (90) seconds. Detection loops shall be tested using an insulation tester (megger) and shall read a minimum of 100 mega ohms.

I. Inductive loop detector sensors controlling extension type detection, as designated on the construction drawings, shall signal continually the presence of any vehicle within the required eight-foot (8') lane width until the vehicle leaves the area of detection, whereupon the vehicle call shall drop after an extension which shall be adjustable from one half (0.5) second to seven and one half (7.5) seconds, minimum. Should a vehicle enter the detection area during the timed extension period, the extension timer shall reset to zero (0) and begin timing the extension period when this vehicle leaves the detection area.

J. If the Engineer approves, the Contractor may place the conductor loops and sealant prior to testing and prior to field installation of the controller cabinet.

K. Provide one detector loop per lane to be used as a dedicated counting loop where required on the plans.

L. Header loops shall be Type "D".

3.07 CONDUIT

A. Conduit shall be installed in accordance with Section 86-2.05C, "*Installation*" of the *State Specifications*.

B. Bonding and Grounding

1. Bonding and grounding shall conform to Section 86-2.10, "Bonding and Grounding," of the State Specifications and these specifications. Grounding to existing water system pipes shall not be permitted.

   In addition to the requirements of Section 86-2.05, "Conduit," of the State Specifications, conduit shall be installed in accordance with State of California Electrical Safety Orders (ESO). Conduit joints and connections shall be made watertight and rustproof by an application of an approved non-insulating thread compound (Crouse Hinds ST2-2 Screw Threading Lubricant and Sealer or approved equal).

2. Trenching by suitable wheel cutter will be allowed provided that trenching is accomplished in accordance with applicable City Standard Drawings for rock wheel trench construction. Calcium chloride shall not be used in concrete or slurry that is in contact with metal conduit.

3. With the Engineer's approval, conduit runs shown in sidewalk areas on the plans may be placed in the street adjacent to the front edge of the curb with boxes located behind the curb in the paved sidewalk area.

3.08 PULL BOXES

A. Pull boxes shall be installed as indicated in Section 86-2.06, "Pull Boxes," of the State Specifications, and as shown on the plans and as directed by the Engineer.

3.09 PEDESTRIAN SIGNALS

A. Pedestrian signals shall be installed on all standards, as shown on the plan. In addition, audible pedestrian signals shall be installed per manufacturer's recommendations.

3.10 PEDESTRIAN PUSH BUTTONS

A. Pedestrian push buttons shall conform to the provisions in Section 86-5.02, *"Pedestrian Push Buttons,"* of the *State Specifications* and these specifications.

3.11 FOUNDATIONS AND FOOTINGS

A. Foundations and footings shall be installed for all poles and standards and for the controller at the location shown on the plans. If type "P" cabinet is specified, it shall be installed on an eighteen-inch (18") raised concrete foundation, 50" x 30" in dimension, with 1" drain and driven ground rod.

B. The Contractor shall install fifteen feet (15') of bare #4 stranded copper wire below each combined traffic signal and street lighting pole base prior to pouring the concrete. This additional grounding conductor is to be bolted to the bonding terminal in each pole. Refer to applicable City Standard Drawings.

3.12 CONDUCTORS AND WIRING

A. Conductors for the signals and electrical services shall be installed as shown on the plans and as directed by the Engineer. A pull rope shall be installed in all conduits.

B. Provide six feet (6') of slack in each conductor in each pull box and adjacent to the standards. All conductors shall be tagged as specified herein.

C. As required, conductors shall be spliced at the pole's pull box before the conductors enter the pole circuit.

D. Looping or paralleling of conductors from a terminal box on a pole from pole to pole will not be allowed.

E. Neutral conductors and commons for pedestrian push buttons shall be spliced in the adjacent pull boxes.

F. Service connections to the power supply will be made by the utility company. Contractor shall apply for and coordinate the same at no additional cost to the City.

G. Conductors between pull boxes shall be the size indicated on the Plans.

H. No conductors shall be installed until all pull boxes are set to grade and drain rock installed.

I. Conductors shall be hand drawn into the conduit after the conduit has been completed.

J. Immediately before drawing the conductors into the conduit, the conduit shall be cleaned, swabbed, or blown out.

K. Conductors shall be installed without injury to insulation.

L. Where two or more conductors are to be installed in the same conduit, all conductors shall be drawn into the conduit at the same time.

M. If the conduit is installed in a concrete foundation, conductors shall not be installed until after the concrete has attained a compressive strength of at least one thousand pounds per square inch (1,000 psi.)

3.13 INTERNALLY ILLUMINATED STREET NAME SIGNS

A. Perform installation in accordance with the applicable City Standard Drawings, and as directed by the Engineer.

3.14 UNDERGROUND ELECTRIC SERVICE

A. Underground electric service equipment shall be installed by the Contractor.

B. The meter socket and circuit breaker enclosure, shall be mounted on the controller cabinet by the Contractor so that a conduit from an underground service point can be installed up the same side of the cabinet and enter the meter socket enclosure. A bushed opening shall be provided in the back, near the bottom of the circuit breaker enclosure, so that the load conductors can enter the controller cabinets.

C. Existing signal equipment and loop detector damaged during construction operation shall be repaired and restored by the Contractor to the satisfaction of the Engineer.

3.15 TESTING

A. Testing shall conform to the provisions in Section 86-2.14, *"Testing,"* of the *State Specifications* and these specifications.

B. Where the inductive loop detector conductors are to be installed in an area that is to be resurfaced with asphalt concrete, the loop detector conductors shall be placed in slots cut in the existing pavement. The conductors shall be installed as shown on the plans. Testing of the detector loops shall conform to the requirements of Section 86-2.14B, *"Field Testing,"* of the *State Specifications* and Paragraph 3.04, *"Vehicle Detectors,"* of this Section.

C. Section 86-2.14C, *"Functional Testing,"* of the *State Specifications* is modified as follows:

"A functional test shall be made in which it is demonstrated that each and every part of the system functions as specified or intended herein prior to actual signal turn-on.

Field wiring and signal phases shall be tested by individual color display, phase by phase, prior to full connection of all field wiring and system operation.

The functional test for the traffic signal system shall consist of not less than five (5) working days of continuous satisfactory service. The functional test shall not begin until the entire installation is complete and in place, to include signal face alignment, in accordance with all requirements of the plans and these specifications, to the satisfaction of the Engineer.

During the five (5) working day test period, City forces will maintain the signal system. The cost of any maintenance or repair necessary, except electrical energy, shall be deducted from any monies due or to become due the Contractor.

If unsatisfactory performance of the system develops, the conditions shall be corrected and the test shall be repeated again until the five (5) working days of continuous satisfactory performance is obtained.

The test schedule shall be as approved by the Engineer.

A shutdown of the electrical system resulting from damage caused by public traffic, from a power interruption, or from unsatisfactory performance of City-furnished materials shall not constitute discontinuity of the functional test.

Upon successful completion of the five (5) working day field test and throughout the remainder of the construction period and during the guarantee period, the Contractor shall replace or repair defective parts or equipment within seventy-two (72) hours of being notified of such defective condition and provide such maintenance and repair assistance to the City as may be reasonably necessary."

End of Section

SECTION 02480 - LANDSCAPE SOIL PREPARATION

CONTENTS:

Part 1 - General 1

1.01 Work Included 1

1.02 Related Requirements 1

1.03 Reference Standards 1

1.04 Quality Assurance 1

1.05 Measurement And Payment 3

Part 2 - Products 3

2.01 Class A Topsoil 3

2.02 Class B Topsoil 3

2.03 Class C Topsoil 4

2.04 Fertilizers 4

Part 3 - Execution 5

3.01 General 5

3.02 Fertilizing And Conditioning 5

3.03 Finish Grading 5

SECTION 02480 - LANDSCAPE SOIL PREPARATION

PART 1 - GENERAL

1.01 WORK INCLUDED

A. Landscape soil preparation shall include topsoil placement and the preparation for the spreading, densification, cultivation, and raking of the topsoil, including fertilization and conditioning.

B. Planting holes and backfill shall be accomplished in accordance with Section 02483, *"Planting,"* of these specifications.

C. Preliminary rough grading and related work to prepare areas for landscaping work to 0.1 foot of finish grade, shall be completed in accordance with Section 02210, *"Site Grading,"* of these specifications.

1.02 RELATED REQUIREMENTS

A. Section 02210, *"Site Grading"*

B. Section 02483, *"Planting"*

C. Section 02486, *"Irrigation"*

1.03 REFERENCE STANDARDS

Not Used

1.04 QUALITY ASSURANCE

A. Reviews

1. Contractor shall specifically request the following reviews at least two (2) working days in advance prior to progressing with the work:

   a. Rough grading

   b. Verification of roto-tilling depths, and

   c. Finish grade

B. Certification

1. Written certificates stating quantity, type and composition, weight and origin for all amendments, chemicals, and any import topsoil shall be delivered to the Engineer before the material is used on the site.

C. Soil Testing

1. Native soil and in-place topsoil shall be tested for amendment determination by *Soil and Plant Laboratory, Inc.* or a laboratory approved by the Engineer. Contractor shall submit sample and provide the Engineer with eight (8) copies of all reports and recommendations for amendments.

2. Soils shall be tested on a basis equal to *SOIL AND PLANT LABORATORY, INC., 325 Mathew St., Santa Clara, CA 95050, 408-727-5125:* Test AO5-2. Components of the test shall include all major nutrients, pH, salinity, boron, sodium, micronutrients copper, zinc, manganese and iron, adsorption rate, organic content and texture.

3. All soil installed on the project shall be screened accordingly, consistent and uniform.

4. CHEMISTRY – SUITABLE CONSIDERATIONS

   a. SALINITY: Saturation Extract Conductivity (ECe)
      Less than 3.0 ds/m/cm @ 25° C

   b. SODIUM: Sodium Adsorption Ratio (SAR)
      Less than 6.0

   c. BORON: Saturation Extract Concentration
      Less than 1.0 ppm

   d. REACTION: pH of Saturated Paste: 5.5 – 7.5
      Without high line content.

   FERTILITY CONSIDERATIONS

   Soil to contain sufficient quantities of available nitrogen, phosphorus, potassium, calcium and magnesium to support normal plant growth. In the event of nutrient inadequacies, provisions shall be made to add required materials prior to planting.

5. Testing costs for City-funded projects shall be paid for by the City. The Contractor shall pay for projects not funded by the City.

D. Amendment Testing

1. Contractor shall provide a one-quart sample of each proposed amendment, together with the in place soil sample, to *Soil and Plant Laboratory of Santa Clara, (408) 727-0330*, or a laboratory approved by the City, for their testing and recommendations.

2. No material shall be delivered to the site until the Engineer reviews and approves the material.

3. Testing costs for the initial samples on City-funded projects shall be paid for by the City. Costs for soil and soil amendment testing on projects not funded by the City or recurrent samples necessary due to non-compliance shall be paid for by the Contractor.

1.05 MEASUREMENT AND PAYMENT

A. Landscape soil preparation shall be measured and paid for at lump sum price, or paid for as individual items at the contract prices per ton or cubic yard, whichever is indicated in the Bid Schedule. The above prices and payments shall include full compensation for furnishing all labor, materials, tools, equipment, and other incidentals, complete in place, for doing all landscape soil preparation as shown on the Plans and as specified herein, and as directed by the Engineer.

PART 2 - PRODUCTS

2.01 CLASS A TOPSOIL

A. Shall be imported from a source outside the limits of the project selected by the Contractor in compliance with the requirements specified herein.

B. Import topsoil shall be a homogeneous mineral soil of sandy loam or loamy sand. Import topsoil shall be free of harmful insects, chemicals, all weed growth, clods over four (4) cubic inches that will not pulverize during operations, and free of rocks over two (2) cubic inches. Particle size data shall be based upon standard USDA methodology. The material shall be in the 0.05 to 5.0 millimeters range with 15% in the 0.5 to 2.0 millimeters coarse sand range. Gravel content (greater than 2.0 mm) shall be less than fifteen percent (15%). Import topsoil shall not contain more silt and clay than on site native soil.

C. The sum of silt plus clay shall be less than twenty-five percent (25%), the soil shall be non-saline as determined on the saturation extract. Salinity shall not exceed three (3.0) mmhos/cm, boron shall not exceed one part per million (1.0 ppm) and the sodium adsorption shall not exceed six (6.0). Soil reaction as determined on a saturated paste shall fall between five and one half (5.5) and seven and one half (7.5). The soil shall be free of organic herbicides or other growth restricting chemicals.

D. Topsoil shall be suitable to sustain the growth of the plants specified.

2.02 CLASS B TOPSOIL

A. Class B topsoil is defined as material which is obtained from sources and in quantities designated on the Plans or in the Special Provisions, and which require transport to the designated landscape areas. The cost of stripping, processing, and transporting shall be included in the price for hauling and placing.

2.03 CLASS C TOPSOIL

A. Class C topsoil is defined as soil found in place in the designated landscape area, including soil compacted in place as part of the earthwork specified for the project.

2.04 FERTILIZERS

A. Manure

1. Manure shall be the product of yard-fed cattle, free of weed seed, straw or other inert material, and aged at least three (3) months. Manure shall have been processed by grinding and screening. Source shall be approved in advance by the Engineer.

B. Commercial Fertilizer

1. Commercial fertilizer shall be pelletized or granular product having a chemical analysis as specified on the Plans or in the Special Provisions. Fertilizer shall be free-flowing material and delivered in unopened sacks.

C. Organic Soil Amendment

Organic soil amendment shall be Type 1, processed wood product derived from redwood or fir and shall comply with the following requirements:

Gradation	**Percent Passing (Min.)**
1/4"	95%
No. 8	80%
No. 35	30%
Nitrogen Content	**Percent Dry Weight**
Redwood	0.4 - 0.6%
Fir	0.56 - 0.84%
Cedar	0.56 - 0.84%
Fir Bark	0.8 - 1.2%
Pine Bark	0.8 - 1.2%

2. Salinity - Maximum saturation extract conductivity shall be two and one half (2.5) milliohms/centimeter at 25°C.

3. Wettability - When one teaspoon of tap water is applied to four (4) cubic inches of air-dry product, the material shall become completely damp in a period not exceeding two (2) minutes. Wetting agent shall be guaranteed non-phyto-toxic at the rate used.

PART 3 - EXECUTION

3.01 GENERAL

A. Soil shall not be worked when it is so wet or so dry as to cause excessive compaction or the forming of hard clods or dust.

B. Existing soil below subgrade for Class A topsoil shall be scarified to a depth of six inches (6") prior to spreading topsoil.

C. Class B or C topsoil shall be scarified and cultivated to a finely divided condition to a depth of eight inches (8") below finish grade.

3.02 FERTILIZING AND CONDITIONING

A. Planting area shall be brought to finish grade before spreading the fertilizers or conditioning materials.

B. Fertilizer and conditioning materials shall be mechanically spread at a uniform rate. The quantities of materials necessary for the planting area shall be at the site and shall be verified by delivery tickets before spreading.

C. After spreading, fertilizing and conditioning materials shall be uniformly cultivated into the upper six inches (6") of soil by a suitable equipment operated at least two (2) directions approximately at right angles.

3.03 FINISH GRADING

A. Finished grade shall be smooth, uniform, and free of abrupt grade changes and depressions to ensure surface drainage.

B. Finished grade adjacent to paving, curbs, or headers shall be one inch (1") below in lawn area shrub or ground cover areas.

C. After fertilizing and conditioning, the soil shall be watered and allowed to settle to provide a stable surface, not overly densified to the extent that it will prevent aeration and water infiltration. After the soil had dried out to a workable condition, the planting areas shall be regraded, raked, and smoothed to the required grades and contours. Finish surfaces shall be clean and suitable for planting.

D. No rocks or materials other than specified for backfill shall be allowed in the top six inches (6") of any seedbed.

End of Section

SECTION 02483 - PLANTING

CONTENTS:

Part 1 - General 1

1.01 Work Included 1

1.02 Related Requirements 1

1.03 Reference Standards 1

1.04 Quality Assurance 1

1.05 Measurement And Payment 3

Part 2 - Products 3

2.01 Trees 3

2.02 Plant Health 7

2.03 Untrue Species 7

2.04 Lawn Sod 8

2.05 Grass Seed 8

2.06 Chemicals 8

2.07 Plant Tablets 8

2.08 Mulch 9

Part 3 - Execution 9

3.01 Tree And Shrub Planting 9

3.02 Staking 12

3.03 Guying 12

3.04 Ground Cover Planting 12

3.05 Lawn Planting 12

3.06 Shredded Redwood Mulch 14

3.07 Cutting Of Roots 14

SECTION 02483 - PLANTING

PART 1 - GENERAL

1.01 WORK INCLUDED

A. Prepare soil for planting, including subgrade work.

B. Furnish and install all container plantings, sod, staking, ground and related work thereto.

C. Coordinate and provide all services as required to contract or grow plant material indicated on the Drawings.

1.02 RELATED REQUIREMENTS

A. Section 02480, *"Landscape Soil Preparation"*

B. Section 02499, *"Landscape Maintenance"*

1.03 REFERENCE STANDARDS

A. *"Standardized Plant Names,"* Second Edition

B. *"A Checklist of Woody Ornamental Plants of California,"* Manual 32, University of California

C. Specifications of the California Association of Nurserymen

D. Specifications of the American Association of Nurserymen

1.04 QUALITY ASSURANCE

A. Reviews

1. The Contractor shall specifically request that the following reviews be made by the Engineer prior to progressing with the work:

   a. Plant material review at nurseries

   b. Plant layout on site

   c. Substantial completion

   d. Final acceptance

B. Submittals/Plant Material/Seeds

1. Within ten (10) working days after receiving the Notice to Proceed, the Contractor shall submit eight (8) copies of the notice to the Engineer certifying the quantity and species of plant material ordered, the nursery supplying the material and any plant material unavailable at the time, and proposed schedule for growing same to be reviewed by the Engineer.

C. Contract Growing

1. The Contractor is advised that plant material specified is not subject to substitutions and that Contractor shall contract grow or otherwise provide plant material as noted. If portions of plant material are unavailable, all other operations are to be completed within the time schedules outlined, with the remaining work to be scheduled for completion later, with no change in contract amounts or payments.

D. Nomenclature and Labels

1. Plant botanical names shall conform to *"Standardized Plant Names,"* Second Edition, and secondly, *"A Checklist of Woody Ornamental Plants of California,"* Manual 32, University of California. All plants of each clone, species, and cultivar shall be delivered to the site labeled with their full botanical and common name. Every plant species shall be labeled with no less than one (1) label for every ten (10) plants of a species.

E. Quality

1. Minimum quality of all plant material shall conform to prevailing published specifications of the California Association of Nurserymen and the American Association of Nurserymen, unless otherwise indicated.

F. Quantities

1. The quantities shown on the plant list are for the Engineer's use and are not to be construed as the complete and accurate limits of the contract. The Contractor shall furnish and install all plants shown schematically on the Drawings. Any unlabeled plants shall be considered as the smaller size shown for that type on the Drawings.

G. Root Systems

1. All container-grown stock shall be grown in its container for at least six (6) months prior to its planting. Root system shall not be girdled and roots shall be healthy and show no signs of disease. The Contractor shall allow one percent (1%) of the quantity of plants for removal and inspection. Any plant material, within two (2) years following the final acceptance of the project, determined

by the Engineer to be defective, restricted, declining or otherwise deficient due to abnormal root growth, shall be replaced by the Contractor to the equal condition of adjacent plants at the time of replacement.

1.05 MEASUREMENT AND PAYMENT

A. Trees and shrubs shall be measured and paid for as individual items at the contract price for each size and specie as indicated in the Bid Schedule.

B. Sod lawn planting and seed lawn planting shall be measured and paid for at the contract price per Square Feet or Square Yard as indicated in the Bid Schedule.

C. Ground cover planting shall be measured and paid for at the contract price per Square Feet or Square Yard as indicated in the Bid Schedule.

D. The above prices and payments shall include full compensation for furnishing all labor, materials, tools, equipment, and other incidentals, complete in place, for planting, as shown on the Plans and specified in these specifications and Special Provisions, and as directed by the Engineer.

PART 2 - PRODUCTS

2.01 TREES

A. PROPER IDENTIFICATION

All trees shall be true to name as ordered or shown on the planting plans and shall be labeled individually or in groups by species and cultivar (where appropriate).

B. COMPLIANCE

All trees shall comply with federal and state laws and regulations requiring inspection for plant disease, pests and weeds. Inspection certificates required by law shall accompany each shipment of plants. Clearance from the County Agricultural Commissioner, if required, shall be obtained before planting trees originating outside the county in which they are to be planted. Even though trees may conform to county, state, and federal laws, the city may impose additional requirements.

C. TREE CHARACTERISTICS AT THE TIME OF SALE OR DELIVERY

1. TREE HEALTH

Contractor shall have an ISA certified arborist certify that all standards are adhered to.

As typical for the species/cultivar, trees shall be healthy and vigorous, as indicated by:

- Foliar crown density
- Length of shoot growth (throughout crown)
- Size, color and appearance of leaves
- Uniform distribution of roots in the container media
- Appearance of roots
- Absence of twig and/or branch dieback
- Freedom from insects and diseases
- Pathology reports shall be submitted to Public Works prior to delivery of trees to site. Reports shall include pathology results for leaf, stem, root tissues, and for root ball container soil.

Note: Some of these characteristics cannot be used to determine the health of deciduous trees during the dormant season.

2. CROWN

a. Form: Trees shall have a symmetrical form as typical for the species/cultivar and growth form.

Good quality nursery shade tree

i. **Central Leader**: Trees shall have a single, relatively straight central leader and tapered trunk, free of co-dominant stems and vigorous, upright branches that compete with the central leader. Preferably, the central leader should not have been headed. However, in cases where the original leader has been removed, an upright branch at least ½ (one-half) the diameter of the original leader just below the pruning point shall be present.

Note: This section applies to single trunk trees grown with normal straightness, as typically used for street or landscape planting. This specification does not apply to plants that have been specifically cultured in the nursery or selected for unusual or unique shape, such as contorted forms, topiary forms, espalier forms, multi-stem, or clump forms.

Evaluating trunk and branch structure

Trunk structure: Shade trees that are large at maturity, and most evergreen trees, with the best quality have a dominant or central leader or trunk up to the top of the canopy (See drawing PR-18 and PR-19). Shade trees of lesser quality have two or more leaders or trunks; they could split apart as they grow older. Small ornamental trees can have several trunks.

ii. Potential Main Branches: Branches shall be distributed radially around and vertically along the trunk, forming a generally symmetrical crown typical for the species.

1.) Potential main branches shall be evenly spaced and have appropriate space between them.

2.) Branches shall be no larger than 2/3 (two thirds) the diameter of the trunk, measured 1" (one inch) above the branch.

3.) The attachment of scaffold branches shall be free of included bark.

iii. Temporary branches: Unless otherwise specified, small "temporary" branches should be present along the lower trunk below the first potential permanent branch, particularly for trees less than 1-1/2" (one and one-half inches) in trunk diameter. Temporary branches should be distributed around and vertically along the lower trunk. They should be no greater than 3/8" (three-eighths inch) in diameter and no greater than ½ (one-half) the diameter of the trunk at the point of attachment. Heading of temporary branches is usually necessary to limit their growth.

3. TRUNK

a. Trunk diameter and taper shall be sufficient so that the tree will remain vertical without the support of a nursery stake.

b. The trunk shall be free of wounds (except properly-made pruning cuts), sunburned areas, conks (fungal fruiting-bodies), wood cracks, bleeding areas, signs of boring insects, galls, cankers and/or lesions.

c. Trunk diameter at 6" (six inches) above the soil surface shall be within the diameter range shown for each container size below:

Container	Soil Volume*	Trunk Diameter (in)	Soil level from Container Top (in)
# 5	0.6	0.5" to 0.75"	1.25" to 2"
# 15	3.3	0.75" to 1.5"	1.75" to 2.75"
24 inch box	10.5	1.5" to 2.5"	2.25" to 3"

* Approximate soil volume in gallons

4. ROOTS

a. The trunk, root collar (root crown) and large roots shall be free of circling and/or kinked roots. Soil removal near the root collar may be necessary in order to verify that circling and/or kinked roots are not present.

b. The tree shall be well rooted in the container. When the trunk is carefully lifted both the trunk and root system shall move as one.

c. The upper-most roots or root collar shall be within 1" (one inch) above or below the soil surface. The soil level should be within 2" (two inches) of the top of the container (see table above)

d. When the container is removed, the root ball shall remain intact.

e. The root ball periphery should be free of large circling and bottom-matted roots. The acceptable diameter of circling peripheral roots depends on species and size of root ball. The maximum acceptable size should be indicated for the species (if necessary).

f. On grafted or budded trees, there shall be no suckers from the root stock.

5. MOISTURE STATUS

At time of inspection and delivery, the root ball shall be moist throughout, and the tree crown shall show no signs of moisture stress, as indicated by wilt. Roots shall show no signs of being subjected to excess soil moisture conditions, as indicated by root discoloration, distortion, death, or foul odor.

D. INSPECTION

The City reserves the right to reject trees that do not meet specifications as set forth in these guidelines or as adopted by the buyer. If a particular defect or sub-standard element or characteristic can be easily corrected, appropriate remedies shall be required. If destructive inspection of root balls is to be done, the buyer and seller should have a prior agreement as to the time and place of inspection; minimum number and/or percentage of a species (cultivar) and as to who is financially responsibility for the inspected trees.

E. GLOSSARY

Note: The word *shall* indicate a practice that is mandatory. The word *should* refers to a practice that is highly recommended.

1. **Co-dominant** branches- Those that are roughly equal in size to the trunk or branch on which they originate, or where two or more branches of relatively equal size fork or diverge from a common point. Co-dominate branches are usually vigorous and upright.

2. **Crown**– The portion of a tree above the trunk including the branches and foliage.

3. **Cultivar**– A named plant selection from which identical or nearly identical plants can be produced, usually by vegetative propagation or cloning.

4. **Girdling root- A** root that partially or entirely encircles the trunk and/or large buttress roots, which could restrict growth and downward movement of photosynthates.

5. **Included bark**– Bark that is entrapped in narrow-angled attachments of two or more stems, branches, or a stem and branch (es). Such attachments are weakly attached and subject to failure.

6. **Kinked root- A** taproot or a major root(s), which is sharply bent and can cause plant instability and reduction of movement of water, nutrients, and photosynthates.

7. **Leader**– The dominant stem or trunk that forms the apex of the tree.

8. **Root collar**– The flared lower portion of the base of a tree where the roots and stem merge. Also referred to as the "root crown" or "root flare."

9. **Scaffold branches**– In decurrent (round headed) trees , the branches that are among the largest on the tree and that form the main structure of the crown.

10. **Stem-** The axis (trunk of a central leader tree) of a plant on which branches are attached.

11. **Temporary branch–** A branch(s) that will remain on the tree for only a short period. Temporary branches will protect the trunk from sunburn damage and mechanical injury, and increase trunk caliper and taper thereby increasing trunk strength and flexibility. These branches are kept small and gradually removed as the trunk develops.

12. **Trunk**– The main stem of a tree between the ground and the lowest scaffold branch.

2.02 PLANT HEALTH

A. Foliage roots and stems of all plants shall be of vigorous health and normal habit of growth for its species. All plants shall be free of all diseases, insect stages, burns, or disfiguring characteristics.

2.03 UNTRUE SPECIES

All plant material within two (2) years following the final acceptance of the project, determined by the Engineer not to be the species, clone, and/or variety specified, shall be replaced by the Contractor to equal condition of adjacent plants at the time of replacement.

2.04 LAWN SOD

A. Sod shall be grown from high quality seed in soil treated with appropriate State and Agency approved pesticides insecticides, fungicides, and herbicides and regularly inspected by the State of California Regulations Nursery Inspection. Sod shall have a well developed root structure sufficiently mature so it will hold together when held by one end of roll. Yellowing, brown, diseased, dried, or pest-infested sod shall be rejected. Soil thickness of the sod shall be one-half inch (1/2") thick, excluding top growth and thatch. Top growth shall be uniformly mowed to one and one-half inches (1-1/2") to two inches (2"), with excess clippings surface debris removed. Size of rolls or slabs shall be consistent with the supplier's standard length and width and is not to vary by more than two percent (2%) in either dimension. See landscaping plans for turf species. Sod shall not include netting.

2.05 GRASS SEED

A. At least one (1) sample of the variety of turf-type grass seeds shall be submitted to the Engineer for approval before planting.

2.06 CHEMICALS

A. The following brand names of chemicals to be used in this Section are for ease of specifying; equals or brands with similar chemicals that will match or improve performance may be used with the Engineer's approval.

1. Pre-emergent herbicide: "Treflan"

   "Dymid"

2. Anti-desiccant for foliage: "Wilt-Pruf Formula NCF"

B. The Contractor shall verify compatibility, dosage and other application procedures with the manufacturer and pre-test any and all chemicals at the site to verify compatibility with proposed plantings. The Contractor shall be responsible for damages arising from inappropriate use.

2.07 PLANT TABLETS

A. All container plants shall receive plant tablets (Agriform or approved equal) as follows:

One gallon plants	-	Four 21-gram tablets
Five-gallon plants	-	Eight 21 gram tablets
Fifteen-gallon plants	-	Twelve 21 gram tablets
24" Box trees	-	Eighteen 21 gram tablets

B. Space the tablets evenly around the rootball halfway up backfill touching side of rootball. Engineer will require excavation of plants selected at random for conformance review.

C. Note: Alternate type(s) and application rate(s) of plant tablets may be required as directed by the Engineer based on results of soil tests.

2.08 MULCH

A. Mulch shall be a shredded or chipped bark and/or wood product of uniform type and consistency. Mulch shall be rock and dirt free and the maximum allowable size for mulch can not exceed three-inch chips.

PART 3 - EXECUTION

3.01 TREE AND SHRUB PLANTING

A. All tree planting stock to be planted using these "planting specifications" shall conform at minimum to the specification guidelines for container-grown landscape trees issued by the California Department of Forestry & Fire Protection (CDF).

B. Trees are to be planted in accordance to the landscape plan as well as adhering to current recognized horticultural practices.

C. Trees shall be planted so that the root ball is equal to or slightly higher than the surrounding soil surface. Shallow is better than deep. Most people plant trees too deep. A hole three times the width of the root ball is often recommended but about one-and-one half the diameter is more common. Roots can become deformed by the edge of the hole in compacted or clayey soils if it is too small. The depth of the hole should be LESS than the height of the root ball, especially in compacted or natural wet soils. If the hole was inadvertently dug too deep, add soil and compact it with your foot. Breaking up compacted soil in a large area (out of the drip line of the tree) around the tree provides the newly emerging roots room to expand into loose soil. This will hasten root growth translating into quicker establishment.

D. The trunk flare (root crown) shall be evident and free of any container soil and/or planting backfill. The trunk flare (root flare, root crown) is the abrupt swelling where roots join the trunk. This point should be visible at the top of the root ball. If the trunk flare is not visible, remove soil or media from the top of the ball until it is visible.

E. The root flare shall be slightly above the surface of the surrounding soil at all times (See drawing PR-19). When planting on a sloping site, the top-most root in the root ball shall be even with the grade on the uphill side of the tree. Site soil will need to be added on the downhill side to cover the sides of the root ball and to construct the soil berm to hold water. It is better to plant the tree a little high than to plant it too deep. If the tree is a little deep, tip it to one side and slide some soil under it; then

tip it back the other way and slide some more soil under the root ball. Continue this until it is set at the appropriate depth. Once it is at the appropriate dept, place a small amount of soil around the root ball to stabilize it. Soil amendments should only be used as needed. The soil removed from the hole generally makes the best backfill.

F. Tree stock will be protected from excessive vibration; avoiding be thrown or bounced off mobile equipment to the ground. Trees shall not be dragged, lifted, or pulled by the trunk or foliage parts in a manner that will loosen the roots in the ball. To avoid damage when setting the tree in the hole, lift the tree with straps or rope around the root ball, not be the trunk. Special strapping mechanisms need to be constructed to carefully lift trees out of large containers.

G. Planted trees shall exhibit no circling root conditions or evidence of untreated root bound container stock. Check rooting structure of the container tree for possible root bound conditions and implement corrections if needed.

Pot bound (also called root bound) root balls from containers have large or many roots on the outer edge of the ball. It is best not to plant trees in this condition because roots could girdle the trunk as the tree grows. The tree could also become unstable later because few supporting roots grow from the outside curved portion of a root. If you must plant a tree with circling roots, these roots should be cut with a knife or pruning tool to prevent them from girdling the tree later, especially if they are near the top of the root ball. Make three or four slices in inch deep from the top of the root ball to the bottom. If in doubt about whether a root is large enough to cut, go ahead and cut it. Research shows that if there is a growth reduction from root pruning container grown trees at planting, the effect is negligible. Other work shows a reduction in shoot growth following root slicing if plants are under irrigation. Recent studies show that slicing the root ball from the top to bottom in several locations does not increase root growth after planting. It does; however, appear to enhance distribution of regenerated roots in the backfill soil profile. Instead of growing almost exclusively from the bottom of the root ball, slicing encourages root regeneration along the slices from the top to the bottom of the root ball. This could help establish the plant quicker by allowing the roots to quickly explore a larger volume of backfill soil.

H. Trees shall all be planted in an upright position avoiding appearances of leaning. Before you begin backfilling, have someone view the tree from two directions perpendicular to each other to confirm the tree is straight. Fill in with some more backfill soil to secure the tree in the upright position. Once you add large amounts of backfill, it is difficult to reposition the tree.

I. Planting tree site (hole) shall reflect proper techniques in the use of backfill soil materials to avoid evidence of large air pockets/voids within the backfill soil profile. Attempt to break up clayey soil clumps as much as possible. Do NOT step firmly on the backfill soil because this could compact it and restrict root growth, especially in clayey soil. Fill the hole around the root ball with soil. When the hole is filled with soil, the root ball should remain 2 to 3 inches above the backfill soil. Slice the shovel 20 to 30 times into the backfill to settle the soil. Add 10 to 20

gallons of water to the root ball and backfill. Fill in any holes or depressions with additional backfill soil. Do not firmly pack backfill soil in an attempt to eliminate air pockets because this could cause too much soil compaction. The water infiltrating the backfill soil will eliminate the large air pockets. The presence of small air pockets could even be of benefit because they could allow more air to reach the roots.

J. All synthetic materials from around the tree trunk and root ball shall be removed and not evident within the backfill soil mix. String, rope, synthetic burlap, plastic, strapping, and other materials that will not decompose in the soil shall be removed at planting.

K. Optional treatment: Cover the planted tree root ball area with mulch. Apply mulch material to at least a 6-foot diameter circle around the tree. Construct a berm out of mulch at the edge of the root ball only if the tree will be watered with a hose, bucket, or other high volume means. Constructing a berm in all other situations will not provide more water to the root system. Do not construct a berm from soil since this soil could end up over the root ball several months later. Water the mulch well after it is spread. Mulching: Weed and turf suppression during establishment is essential. Application of 4+ inches of mulch (after settling) is highly recommended to help discourage weeds. This area should be maintained during the establishment period at least two feet in diameter for each inch of tree trunk diameter (minimum diameter should be six feet for trees with a trunk diameter less than 3 inches). If you wish to place mulch over the root ball, apply only a thin layer over the outer half of the root ball. This keeps the trunk dry and allows rainwater, irrigation, and air to easily enter the root ball area.

L. Support trunk staking that was supplied with the container tree has been removed. Many nursery vendors provide single or double support tree stakes to minimize trunk/crown damage during transporting activities. These support stakes left on the young tree after it is planted in the ground will often inflect wounds to the trunk and lower limbs of the young tree. This transport staking in not needed when 1) proper caliper in tree stock diameter is adhered to in the tree purchase process and/or 2) proper support staking discussed under item 13 below is utilized and installed correctly.

M. Containers shall be opened and removed in such a manner that plant root is not injured. Balled plant wrappings shall be loosened or cut back after plant is positioned in the planting hole.

N. A circular watering basin slightly larger than the planting hole, three inches (3") high for trees, and two inches (2") for shrubs, shall be left around the plant.

O. Trees provided with grating covers should have the top of root balls set four inches (4") below the bottom of the grating. This four-inch (4") gap will then be filled with uniform grey-colored pea gravel up to the bottom of the grating.

3.02 STAKING

A. All trees shall be staked in accordance with applicable City Standard Drawings.

B. Two sets of round cinch trees shall be secured around the upper half of the main trunk. The top set shall be located at the weakest part of the trunk (normally ¾ of the way up the trunk). The lower set shall be located ½ the way up the trunk.

3.03 GUYING

A. Trees, 24" box or specimen size, shall be guyed. Guying shall be done immediately after planting. Three (3) guys per plant shall be installed as follows:

1. Each guy shall be secured to the appropriate main branch by a twisted loop of No. 12 BWG zinc-coated iron wire housed in a visible plastic hose.

2. Each guy shall be anchored to a driven stake located at a horizontal distance from the tree equal to the vertical distance from ground to the connection of guy wire on the tree branch. Each guy shall be covered with highly visible plastic hose or plastic tubing to a height of six feet (6') above grade.

3. Palm trees may not require guying. In any case, any need for, and direction of guying of palm trees shall be as indicated in the project Plans and/or Specifications.

3.04 GROUND COVER PLANTING

A. Ground cover shall be planted in moist soil and spaced as indicated on the Plans. Each plant shall be planted with its proportionate amount of flat soil to minimize root disturbance. A layer of one-inch (1") of Type 1, 2, 3 or 4 mulch shall be spread over the planted areas and watered immediately. Prevent pedestrian traffic during initial growing by erecting temporary protective fencing to be removed at the end of the plant establishment period.

3.05 LAWN PLANTING

A. Seed Lawn Planting

1. After area to receive lawn has been graded and cultivated, it shall be rototilled or disced and cross-disced in two directions, thoroughly pulverizing the surface.

2. The Contractor shall then spread the approved soil amendments to a depth of at least two inches (2") over the entire area in which the lawn is to be planted. Soil amendment shall be lightly disced into the surface of the soil, and then harrowed, dragged and rolled and cross-rolled. Areas that cannot be reached shall be prepared by hand.

3. The surface area to be seeded shall be raked lightly to provide a seedbed and the seed sown evenly by mechanical seeder. Sowing shall only be done in calm weather. The required seed mixture shall be sown uniformly at the rate specified or directed by the Engineer. Seeding shall be done in two (2) operations with the spreader set to sow one-half (½) of the specified amount in each operation. The second sowing shall be at right angles to the first.

4. After sowing the surface of the soil shall be raked lightly, and then rolled with a light roller, and then a film coat of well-rotted, screened or pulverized manure or an approved Redwood soil conditioner, or similar approved product shall be spread to a depth between one-quarter inch (1/4") and one-half inch (½") over the entire area.

5. Immediately after planting, the seeded area shall be thoroughly watered with a fine spray to provide a one-inch (1") depth of penetration into the soil. Water spray shall be applied in a manner that does not cause surface erosion or disturbance to the seedbed.

6. The top surface shall not be allowed to dry at any time.

B. Sod Lawn Planting

1. Finish grade to smooth, even surface allowing for sod thickness at pavement or other structures to leave the sod one half inch (1/2") below the finish grade of adjacent structures. The soil surface shall be sufficiently firm to resist impressions over one quarter inch (1/4") deep and shall be lightly rolled until meeting this firmness. The top six to eight inches (6"-8") of soil shall be watered until this zone has an optimum moisture content for root growth without being over wet.

2. Sod shall be laid in rows with staggered ends neatly and tightly butted on all edges. Sod shall be protected from wind and sun exposure during storage with a maximum storage period of twenty-four (24) hours. No overlaps, gaps, ripples or other uneven placement will be accepted. Contractors shall lightly roll all sod after installation to insure optimum contact with the soil. Trimming and cutting around structures shall be completed with sharp tools and carefully fitted so the final appearance is a solid, continuous turf. All seams and joints shall then be rolled until the sod is bonded to the subgrade.

C. Application of Chemicals

1. Treat all ground cover and seeded and soil lawn areas with herbicide twenty (20) calendar days after planting and thereafter as required to obtain maximum growth and proper weed control.

2. Apply one (1) or more applications of anti-desiccant to plants immediately after arrival at the site, and thereafter as required to minimize wind damage. When directed by the Engineer in lieu of applying anti-desiccant, the Contractor shall thoroughly water plant materials upon arrival and continue such watering until planting takes place.

3.06 SHREDDED REDWOOD MULCH

A. Shredded redwood mulch shall be applied to a minimum depth of (4"), with uniform application over all exposed soil areas. The mulched area then shall be thoroughly watered throughout the full mulch depth.

3.07 CUTTING OF ROOTS

A. No roots shall be cut without prior written approval of the Engineer and the Parks and Recreation Department. In any case, the exact type and location of cutting for any tree will be determined by the Parks and Recreation representative. In no case will cutting depth be deeper than nine inches (9") from the existing ground surface.

End of Section

SECTION 02486 – IRRIGATION

CONTENTS:

Part 1 - General 1

1.01 Work Included 1

1.02 Related Requirements 1

1.03 Reference Standards 1

1.04 Quality Assurance 1

1.05 Measurement And Payment 1

Part 2 - Products 2

2.01 Pipes And Fittings 2

2.02 Control Wire 4

2.03 Pull Boxes 4

2.04 Valve Boxes 4

2.05 Valves 5

2.06 Backflow Preventer Assembly 5

2.07 Backflow Preventer Enclosure 6

2.08 Sprinkler Equipment 6

2.09 Controller Unit 6

2.10 Materials Utilizing Reclaimed Water 6

Part 3 - Execution 7

3.01 Grading 7

3.02 Layout And Trenching 7

3.03 Backfilling 7

3.04 Fabrication 7

3.05 Pipelines 7

3.06 Installation Of Valves And Valve Boxes 8

3.07 Sprinkler Heads 8

3.08 Control Wire 9

3.09 Pull Boxes 9

3.10 Backflow Preventers 9

3.11 Controller 9

3.12 Record Drawings 9

3.13 Flushing And Testing 10

SECTION 02486 – IRRIGATION

PART 1 - GENERAL

1.01 WORK INCLUDED

A. Work includes installation of a complete automatic irrigation system, including excavation for points of connection, trenching, piping, equipment, electrical components, maintenance of the system, and incidentals related thereto.

1.02 RELATED REQUIREMENTS

A. Section 02480, *"Landscape Soil Preparation"*

B. Section 02499, *"Landscape Maintenance"*

1.03 REFERENCE STANDARDS

A. American Society for Testing and Materials (ASTM)

1.04 QUALITY ASSURANCE

A. Reviews.

1. Contractor shall specifically request the following reviews be made by the Engineer prior to progressing with the work:

   a. Layout of system; Proposed layout of irrigation system before installation and installed system prior to burial;

   b. Points of connection excavation;

   c. Coverage adjustment of all heads, valve boxes

   d. Operation of system.

1.05 MEASUREMENT AND PAYMENT

A. The furnishing and metalling of the specified irrigation system, which shall include the installation of a complete automatic sprinkler or subsurface watering system, or both; trenching, piping, electrical components, backflow preventers, irrigation controllers, pressure reducer, connection to water meter, and tie-in shall be measured and paid as a Lump Sum Price, unless otherwise indicated to be paid for as individual items in the Special Provisions and the Bid Schedule.

B. The specified payment will include full compensation for furnishing all labor, materials, tools, equipment, and other incidentals, complete in place and in operation, for installing the irrigation system as shown on the Plans and specified in these specifications and Special Provisions, and as directed by the Engineer.

PART 2 - PRODUCTS

2.01 PIPES AND FITTINGS

A. Copper Pipe: Copper pipe shall be standard size and weight, drawn type, type K, complying with the requirements of ASTM B 88, *"Seamless Copper Water Tube."* Copper pipe shall be jointed with copper sweat fittings.

B. Steel Pipe: Steel pipe shall be galvanized, standard weight (Schedule 40) complying with the requirements of ASTM A 120, *"Pipe, Steel, Black and Hot-Dipped Zinc-Coated (Galvanized) Welded and Seamless, For Ordinary Uses."* Steel pipe shall be jointed with galvanized, threaded, standard weight, malleable iron fittings and couplings.

C. Plastic Pipe For Use With Solvent Weld Socket or Threaded Fittings: Plastic pipe shall be rigid unplasticized polyvinyl chloride (PVC) 1220, Type 1, Grade 2, conforming to ASTM D 1785, *"Poly (Vinyl Chloride) (PVC) Plastic Pipe, Schedules 40, 80 and 120.* Plastic pipe marked with Product Standard PS 21-70 conforms to ASTM requirements.

1. Schedule 40 pipe shall be used for installation on the discharge side of control valves, and Schedule 80 shall be used for continuously pressurized pipe on the supply side of control valves.

2. Schedule 80 only shall be supplied when threaded joints are specified or otherwise permitted by the Engineer.

3. Schedule 40 socket fittings shall conform to ASTM D 2466, "Poly (Vinyl Chloride) (PVC) Plastic Pipe Fittings, Schedule 40". Schedule 80 threaded fittings shall conform to ASTM D 2464, "Threaded Poly (Vinyl Chloride) (PVC) Plastic Pipe Fittings, Schedule 40".

D. Plastic Pipe for Use With Rubber Gaskets: Plastic pipe for use with rubber ring gaskets shall be rigid unplasticized polyvinyl chloride (PVC) 1120, Type 1, Grade 1, manufactured in accordance with ASTM D 2241, *"Bell-End Poly (Vinyl Chloride) (PVC) Pipe".* Pipe shall be supplied with plain ends or with an integral thickened expanded bell with rubber ring groove. Rubber ring gaskets shall be of a synthetic rubber supplied in accordance with the requirements of ASTM D 1869, *"Rubber Rings For Asbestos Cement Pipe".* Pipe shall be furnished in the following Standard Dimension Ratios (SDR) and Pressure Ratings:

160 psi -- SDR 26
200 psi -- SDR 21

E. Polyvinyl Chloride Plastic Pressure Class Water Main for Distribution of Reclaimed Water to Irrigation Systems: Pipe shall be provided with gasketed integral bell and spigot joints meeting the requirements of AWWA C900 and ASTM F477. Size and pressure class shall be as specified, and shall meet the following requirements:

Class	DR
100	25
150	18
200	14

Pipe and all fittings shall be integrally colored purple to designate reclaimed water.

F. Plastic Pipe for Dripline Subsurface Irrigation Systems:

1. Main Line - Pipe shall be Class 200 PVC, SDR21 in conformance with Article 2.01D of this Section with gasketed joints in accordance with ASTM D3139.

2. Lateral Lines - Pipe shall be Schedule 40 PVC with solvent weld, threaded or gasketed joints in conformance with Article 2.01D of this Section and, as applicable, ASTM D2672, D2464 or D3139.

3. Fittings - all connections shall be made with barb or compression type fittings.

4. All pipe and fittings shall meet toxological, chemical, taste, and odor requirements of NSF Standard No. 14.

G. Dripline Tubing with Emitters (Drippers) for Subsurface Irrigation System:

Dripline tubing and emitters shall be extruded from linear low-density polyethylene. Unless otherwise specified, tubing shall have a minimum nominal diameter of 1/2" (0.52" ID X 0.62" O.D.) with a minimum wall thickness of 0.050". Protection against root intrusion shall be provided by means of replaceable non-toxic pre-emergent chemical incorporated into a disc-type filter installed at each landscape zone station. As specified, emitters shall be spaced at either 12", 18", or 24" intervals.

H. Subsurface Irrigation System Accessories. All accessories listed below shall be furnished by the manufacturer of the dripline tubing:

1. Line Flushing Valves - the subsurface irrigation system shall utilize automatic line flush valves at the end of each independent zone area. This valve shall be capable of flushing one (1) gallon at the beginning of each irrigation cycle. The valves shall connect directly to the dripline.

2. Air/Vacuum Relief Valve - each independent irrigation zone shall utilize an air/vacuum relief valve at its high point(s). The purpose of this valve is to evacuate air from the zone at start up and to relieve vacuum at system shut down. The air and vacuum relief valve shall seal effectively from 2 to 10 pounds per square inch (psi).

3. Pressure Regulators - the pressure regulator shall be designed to handle steady inlet pressures over 150 pounds per square inch (psi) and maintain a constant outlet pressure of 20 pounds per square inch (psi). Regulating accuracy shall be within ±6%. The pressure regulator shall be manufactured from high impact engineering grade thermoplastics. Regulation shall be accomplished by a fixed stainless steel compression spring, which shall be enclosed in a chamber separate from the water passage.

4. Filters - the filter shall be a multiple disc type filter with notation indicating the minimum partial size to travel through or the mesh size of the element being used. The disc shall be constructed of chemical resistant thermoplastic for corrosion resistance. Filter size shall be as specified.

5. Remote Control Valves - each valve shall be a 24 VAC 50/60-cycle solenoid valve with an in-rush of 0.35 amps and holding current of 0.23 amps with stainless steel flow control, threaded or slip parts and manual operator.

2.02 CONTROL WIRE

A. Type UF, 600 v. insulation, minimum size #14, copper, common ground white, U.L. approved for irrigation control use. Splices shall be "Scotch-Lok" seal pack or equal, with wire nuts enclosed in a socket seal type wire connection with waterproof sealer.

2.03 PULL BOXES

A. Pull box shall be a Christy N-16, or approved equal, with type "D" lid marked "Sprinkler-Control".

2.04 VALVE BOXES

A. Each valve shall be equipped with a valve box complete with cover. Concrete boxes shall be the extension type with a slide adjustment. The word "WATER" shall be inscribed on the cover. Christy #G-5 valve box shall be used in streets, and #F-22 curb valve box in other locations.

B. Sunlight and weather resistant plastic boxes of approved type and size will be allowed in lieu of concrete boxes.

2.05 VALVES

A. Valves shall be of the size, type, and capacity designated on the Plan. All valves shall be capable of satisfactory performance at a working pressure of 200 psig.

1. Gate Valves: Gate valves in sizes two inches (2") and smaller shall be Mueller, or approved equal, and shall have all bronze double disc wedge type with integral taper seats and non-rising stem. Sizes two and one-half inches (2-½") and larger shall be iron body brass trimmed, with other features the same as for 2".

2. Manual Control Valves: Manual control valves shall be brass or bronze Stockham, or approved equal, and shall be straight or angle pattern globe valves, full opening, key operated with replaceable compression disc and ground joint union on the discharge end.

3. Remote Control Valves: Remote control valves shall be Rainbird Model 100-DV/SS, or approved equal, electrically or hydraulically operated. They shall be constructed of bronze or stainless steel and corrosion resistant components, equipped with flow control, adjustment and capability for manual operation. Each valve shall have an attached brass identification tag indicating assigned controller and irrigation station.

4. Garden Valves: Garden valves shall be brass or bronze except for the handle. They shall have a replaceable compression disc, and shall be three-fourth inch (3/4") straight-nosed, key operated and pressure rated for operation at 150 psi.

5. Quick-Coupling Valves and Assemblies: Quick-coupling valves shall be No. 44, brass or bronze with built-in flow control self closing valve and rubber lid locking cap supplied with one-inch (1") threaded inlet; unless otherwise noted.

6. Check valves: In-line check valves shall be Toro 570 CV.

7. Pressure Regulator: Pressure regulators shall be Mueller, or approved equal, bronze body with full seat opening, completely assembled with strainer.

8. Quick Coupling Valves: quick coupling valves with locking caps shall be Rainbird Model 3RC/44LRC, or approved equal for potable water or Rainbird Model 3RC/44LNP, or approved equal, for non-potable water usage.

2.06 BACKFLOW PREVENTER ASSEMBLY

A. The backflow preventer assembly shall consist of a backflow preventer unit and related components approved by San Mateo County Department of Environmental Health, as manufactured by FEBCO, P. O. Box 8070, Fresno, California 93747, Telephone No. (209) 252-0791, or approved equal.

2.07 BACKFLOW PREVENTER ENCLOSURE

A. Enclosure shall be two-piece expanded metal with provision for padlocking, as manufactured by LE MEUR of Fontana, CA 92336, or approved equal.

2.08 SPRINKLER EQUIPMENT

A. Sprinkler heads, bubbler heads, and spray nozzles shall be Rainbird, or approved equal, of the types and sizes shown on the Plans. Equipment of one type and flow characteristic shall be from the same manufacturer, and all equipment shall bear the manufacturer's name and identification code.

B. Fixed head sprinklers shall have a one-piece housing with provision for interior parts replacement. Pop-up sprinklers shall be designed to rise at least three inches (3") during operation. Full or part circle sprinklers shall be interchangeable in the same housing.

C. Shrubbery and bubbler heads shall be adjustable from full flow to shut off.

D. All sprinkler heads shall be set at finished grade and installed on a double swing joint utilizing a nipple 8" long, minimum as shown on applicable *Standard Drawings*.

2.09 CONTROLLER UNIT

A. The type of control unit shall be as called for on the Plans. It shall be fully automatic with provisions for manual operation, sized to accommodate the number of stations or control valves included in the system. Outdoor models shall be housed in a vandal-proof and weather-proof enclosure with locking cover.

B. Contractor shall clearly label and sequence stations for ease of operation and maintenance. Valves shall be stationed to operate, as they are located around the site. Contractor shall complete all forms and labels shipped with or attached to the controller, and shall submit properly executed guarantees of valves and controllers to the City.

2.10 MATERIALS UTILIZING RECLAIMED WATER

A. All pipe, box lids, and accessories that utilize reclaimed water shall be furnished with an impregnated purple coloring.

PART 3 - EXECUTION

3.01 GRADING

A. Contractor shall be responsible for installing all irrigation features to their finished grade and at depths indicated. All rough grading and/or finish grading shall be completed and/or accommodated before trenching commences.

3.02 LAYOUT AND TRENCHING

A. All features of the irrigation system shall be staked and pipe alignments marked prior to trenching, for approval by the Engineer. Unless otherwise shown as specified, trenching for irrigation lines shall be in accordance with Section 20-5.03D, "*Trenching and Backfilling*", of the *State Specifications*.

B. For layout of subsurface "dripline" irrigation systems, see specific project specifications and drawings and applicable City Standard Drawings.

3.03 BACKFILLING

A. No joints shall be covered until system installation has been inspected and approved by the Engineer. Unless other shown or specified, backfilling shall be in accordance with Section 20-5.03D, "*Trenching and Backfilling*", of the *State Specifications*.

3.04 FABRICATION

A. All manifolds shall be neat, orderly, and constructed for ease in maintenance operations. Construct manifolds so that valve boxes shall be parallel to each other and to adjacent walls, walks, curbs and buildings. Cuts and joints shall be minimized, and shall be smooth and free of burrs.

3.05 PIPELINES

A. All irrigation pipelines shown parallel on the drawing may be installed in a common trench. Where pipelines are shown parallel or adjacent to shrub or ground cover areas, they shall be installed in these areas. Where shown parallel or adjacent to lawn areas versus pavement, they shall be installed in the lawn area. All changes in depth of pipe shall be accomplished using forty-five (45°) fittings.

1. Plastic (PVC) Pipe for Irrigation Systems

a. Plastic pipe shall be jointed by socket type solvent welded fittings, threaded fittings or rubber ring fittings. When plastic pipe is joined to steel pipe, steel pipe shall be installed first. Solvent welded joints shall be made in accordance with ASTM D 2855, *"Recommended Practice For Making Solvent Cemented Joints with Poly (Vinyl Chloride) (PVC) Pipe and Fittings."* The solvent recommended by manufacturer shall be used. Threaded pipe joints shall be made using teflon tape or other approved jointing material.

b. For all pipes utilizing socket fittings, pipe and fittings shall be sanded before solvent welding.

c. Snake plastic pipe from side to side when trench length exceeds thirty feet.

2. Pressure Class PVC Water Main for Distribution of Reclaimed Water to Irrigation Systems

   a. Pipe shall be installed in accordance with applicable requirements of Section 02710 for potable water mains.

3. Brass Pipe

   a. Brass pipe shall be joined to galvanized iron or cast iron pipe with a dielectric pipe union.

4. Steel Pipe

   a. Threaded pipe joints shall be made using teflon tape, pipe dope or other approved jointing material.

3.06 INSTALLATION OF VALVES AND VALVE BOXES

A. Valves, pressure regulators, and boxes shall be installed in normal upright position, unless otherwise recommended by manufacturer, and shall be readily accessible for operation, maintenance, and replacement.

B. In-line check valves shall be installed on all sprinkler and bubbler heads below the highest head at all sloped grades.

3.07 SPRINKLER HEADS

A. Sprinkler head spacing shall not exceed the maximum shown on the Plans. Sprinkler heads shall be installed no more than four inches (4") from adjacent vertical elements projecting above grade, such as walls, planter boxes, curbs and fences. Shrub heads, bubbler heads, and oscillating sprinklers shall have operating height of at least six inches (6") above finish grade.

B. Adjust all heads for arc, radius, riser height, and distribution, for uniform and optimum coverage. Such adjustments shall include nozzle changes without additional cost to the City.

3.08 CONTROL WIRE

A. Install control wire in pipe trenches wherever practical. All control wires shall be enclosed in PVC conduits. Control wires shall be color-coded using white as the common ground. No splices shall be allowed except at pull boxes. A slack of twenty-four inches (24") shall be provided at pull boxes. All splices shall have approved waterproof connector, prefill dry fill splice connector DS-400 by Spears, or approved equal.

3.09 PULL BOXES

A. Pull boxes shall be installed every one hundred fifty feet (150') of straight run, and at every change of direction which exceeds forty-five degrees (45°) deflection.

3.10 BACKFLOW PREVENTERS

A. Backflow preventers shall be provided with pipe supports and the accessories necessary to properly secure the assembly. All backflow preventers shall be assembled with pipe and fittings of galvanized steel as per *Standard Drawing* details.

3.11 CONTROLLER

A. Contractor shall clearly label and sequence stations for ease in maintenance operations. Station valves to operate, as they are located around the site. Fasten controller and wire conduits securely to walls or other structures with conduit clamps and screws.

B. Contractor shall complete all forms and labels shipped with and/or attached to the controller; attached his own name, address and phone number to the controller via a permanent label; and shall properly execute and file with the City the controller and valve guarantees.

3.12 RECORD DRAWINGS

A. As record drawings, the Contractor shall submit as-built plans of the irrigation system. Features below ground shall be indicated with at least three measurements from surface features such as walks, building, or sprinkler heads. All changes shall be recorded on this plan before trenches are backfilled. The record drawings (as-built plans) shall be completed and submitted to the City before final payment will be made for work installed.

3.13 FLUSHING AND TESTING

A. After completion and prior to the installation of terminal fittings, the entire pipeline system shall be thoroughly flushed. After flushing, the following tests shall be conducted:

1. Pipeline Pressure Test for Irrigation System.

   a. A water pressure test shall be performed on all pressure mains and laterals before any couplings, fittings, valves and the like are concealed. All open ends shall be capped after the water is turned into the line in such manner as all air in the system is expelled. Pressure mains shall be tested with all control valves to lateral lines closed. After the pressure main test, all valves shall be opened to test lateral lines. Test pressure and duration shall be as follows:

Mains	-	4 hours at 125 psi
Laterals	-	2 hours at 100 psi

2. Pressure Test for Pressure Class PVC Water Mains for Distribution of Reclaimed Water to Irrigation Systems.

   a. Pipe shall be hydrostatically tested in accordance with applicable requirements of Section 02710 for potable water mains.

3. Operational Test.

   a. The performance of all components of the automatic control system shall be evaluated for manual and automatic operation. During the maintenance period, and at least fifteen (15) working days prior to final inspection, the Contractor shall set the controller on automatic operation and the system shall operate satisfactorily during such period. All necessary repairs, replacements, and adjustments shall be made until all equipment, electrical work, controls and instrumentation are functioning in accordance with the contract documents, at no additional cost to the City.

4. Backflow unit shall be tested after installation by a person authorized or certified by the San Mateo Department of Environmental Health. Testing or retesting required due to construction problems shall be required at no additional expense to the City.

End of Section

SECTION 02499 – LANDSCAPE MAINTENANCE

CONTENTS:

Part 1 - General 1

1.01 Work Included 1

1.02 Related Requirements 1

1.03 Reference Standards 1

1.04 Quality Assurance 1

1.05 Measurement And Payment 1

Part 2 - Products 1

2.01 Fertilizer 1

2.02 Pre-Emergent Herbicide 2

2.03 Water And Electricity 2

Part 3 - Execution 2

3.01 Fertilizer Application 2

3.02 Herbicide Application 2

3.03 Basic Requirements 2

3.04 Vandalism 2

3.05 Commencement Of Maintenance Period 3

3.06 Turfgrass 3

3.07 Final Acceptance 3

3.08 Retention Amount 3

SECTION 02499 – LANDSCAPE MAINTENANCE

PART 1 - GENERAL

1.01 WORK INCLUDED

A. Work includes the growing and maintenance operations necessary to establish all plantings, to provide pest and disease control, and to maintain the irrigation system and related construction elements.

1.02 RELATED REQUIREMENTS

A. Section 02480, *"Landscaping Soil Preparation"*

B. Section 02483, *"Planting"*

C. Section 02486, *"Irrigation"*

1.03 REFERENCE STANDARDS

Not Used

1.04 QUALITY ASSURANCE

A. Soil Testing. A one-quart sample of the in-place topsoil, taken twenty (20) calendar days after planting, shall be submitted to *Soil and Plant Laboratory, Inc., (408) 727-0330*, or a laboratory approved by the City, for fertilizer recommendations. Cost of test shall be paid for by the Contractor. A copy of the test results shall be provided to the Engineer.

1.05 MEASUREMENT AND PAYMENT

A. Unless otherwise specified, landscape maintenance will be paid for as a Lump Sum price. Payment will include full compensation for furnishing all labor, tools, materials, equipment, and other incidentals necessary to perform the required maintenance during the specified time period in accordance with these specifications and/or the Special Provisions and as directed by the Engineer.

PART 2 - PRODUCTS

2.01 FERTILIZER

A. Fertilizer to be used during the course of maintenance period shall be determined by the soils test as required in Paragraph 1.04 A of this Section.

2.02 PRE-EMERGENT HERBICIDE

A. As recommended by licensed Pest Control Advisor. Cost shall be paid for by the Contractor.

2.03 WATER AND ELECTRICITY

A. During the course of construction and maintenance period, water and electricity shall be paid for by the Contractor.

PART 3 - EXECUTION

3.01 FERTILIZER APPLICATION

A. Fertilizer(s) shall be applied per *Soil and Plant Laboratory* recommendations (see Paragraph 1.04 of this Section). Initial application shall be three (3) to four (4) weeks after planting with recurrent applications at thirty (30) day intervals as approved by the Engineer. Fertilizer shall be applied when the landscape is dry and watered properly with thorough irrigation.

3.02 HERBICIDE APPLICATION

A. Shall not be used until all plant material has been planted a minimum of twenty (20) calendar days. All planting areas shall be kept weed-free by non-herbicidal methods during this time period. Herbicide Pre-emergent herbicide shall not be applied to any areas that are scheduled for seeding or have been seeded until the seeded area becomes substantially established as determined by the Engineer.

3.03 BASIC REQUIREMENTS

A. All planting areas shall be kept weed-free at all times during the maintenance period. All pests and disease control shall be the Contractor's responsibility. All planting areas shall be kept at optimum moisture for plant growth. Planting not adequately served by the automatic irrigation system shall be hand watered. Settlement of soil and plants and soil erosion shall be repaired and areas replanted as required. Dying or deficient plants shall be replaced, as they become apparent.

3.04 VANDALISM

A. Landscape work under City-funded contract damaged by vandalism, vehicular damage and/or theft, during the installation of the work, maintenance period, and until final acceptance by the City, shall be repaired or replaced by the contractor without cost to the City. All replaced planting and repaired items shall be subject to extended maintenance and warranties similar to the initial requirements.

3.05 COMMENCEMENT OF MAINTENANCE PERIOD

A. Unless otherwise specified in the Special Provisions, the maintenance period shall commence from the date of substantial completion established in writing, and extend for a minimum of one hundred twenty (120) calendar day period thereafter, or until final completion, whichever is longer. Substantial completion shall be deemed as the time all major planting, including ground cover, the irrigation system, and all landscape maintenance work, is satisfactorily completed, with the exception of minor items to be completed as noted upon a checklist compiled by the Engineer. Maintenance period shall not commence until approved by the City in writing.

3.06 TURFGRASS

A. Contractor shall provide all services and incidental work as required to promote and maintain a thick, hardy, weed-free, well-established turf within the maintenance period. Bare spots or other problem areas shall be corrected, as they are determined, at two (2) week intervals. Turfgrass shall be removed mowed to a two inch (2") height after it reaches a three to four inch (3-4") height, as often as necessary.

3.07 FINAL ACCEPTANCE

A. At the end of the maintenance period, all plants shall be in a healthy growing condition. Contractor shall have corrected all noted deficiencies, performed final cleanup and weed removal, and shall have completed all phases of landscape maintenance operations.

B. The request for final inspection shall be made in writing to the Engineer at least ten (10) days prior to the end of the maintenance period. Failure to request the final inspection to said number of days shall automatically move the date of completion and extend the maintenance period at no additional cost to the City.

C. All areas shall remain weed-free for thirty calendar days after the end of the maintenance period or the weeds will be removed at the Contractor's expense.

3.08 RETENTION AMOUNT

A. An amount equal to ten percent (10%) of the lump sum bid item for landscaping, but not less than three percent (3%) of the total contract amount, shall be retained until 30 calendar days after the completion and final acceptance of the landscape maintenance.

End of Section

SECTION 02510 – CRACK SEALING

CONTENTS:

Part 1 - General 1

1.01 Work Included 1

1.02 Related Requirements 1

1.03 Reference Standards 1

1.04 Quality Assurance 1

1.05 Measurement And Payment 1

Part 2 - Products 1

2.01 Crack Fill Material 1

Part 3 - Execution 2

3.01 Preparation 2

3.02 Application 2

SECTION 02510 – CRACK SEALING

PART 1 - GENERAL

1.01 WORK INCLUDED

Work specified in this section includes the filling of all cracks ¼-inch wide and larger in existing asphalt pavement surfaces. Crack Sealing shall be performed prior to application of slurry seal and elsewhere whenever so specified in the Special Provisions or shown on the Project Plans.

1.02 RELATED REQUIREMENTS

A. Section 1340, *"Submittals"*

B. Section 02500, *"Paving and Surfacing"*

C. Section 02520, *"Slurry Seal"*

D. Section 02580, *"Traffic Striping and Signing"*

E. Section 03300, *"Minor Concrete"*

1.03 REFERENCE STANDARDS

American Association of State Highway Transportation officials (AASHTO). State Standard Specification, July 1995.

1.04 QUALITY ASSURANCE

Not used.

1.05 MEASUREMENT AND PAYMENT

A. Measurement and payment for crack sealing either will be included in the applicable unit price for asphalt concrete or slurry seal or payment will be made on a separate lump sum basis. Payment will include costs for all work and materials specified herein.

PART 2 - PRODUCTS

2.01 CRACK FILL MATERIAL

Crack sealant material shall be asphalt-vulcanized rubber material conforming to the following requirements:

A. The asphalt shall have a maximum penetration of 150 when tested in accordance with the procedure specified by the applicable AASHTO specification.

B. The granulated curb rubber (100% vulcanized) shall meet the following requirements:

PASSING SIEVE	PERCENT
No. 8	100
No. 10	98 – 100
No. 40	0 – 100

The sieves shall comply with the requirements of AASHTO 92.

The specific gravity of the granulated curb rubber shall be 1.15 ± 0.02 and shall be free of fabric, wire or other contaminated materials, except that up to four percent of calcium carbonate may be included to prevent particles from sticking together.

Rubber materials shall be packaged in boxes of approximately 60-lb. weight, with a polyethylene liner. The boxes shall be placed on pallets and covered with a weather resistant covering. Equipment used by the Contractor shall be specifically manufactured for this purpose. The crack machine shall be a Crafco Model 200 or approved equal. Heated rubberized crack seal machine shall be a Crafco Model BC-220 or an approved equal.

PART 3 - EXECUTION

3.01 PREPARATION

A. Prior to application of hot asphalt-rubber sealant, joints and cracks shall be cleaned to remove dust, dirt, moisture and foreign material or old sealant. All cracks shall be routed to a nominal width of ½-inch and ¾-inch nominal depth.

B. Asphalt-rubber sealant material shall be unboxed and placed in joint and crack sealing machine for heating and mixing. The asphalt-rubber shall be heated to a minimum temperature of 300°F. The material shall be held in the mixing tank at application temperature until very little separation of the rubber and asphalt occurs when a bead of sealant material is placed on the pavement. Sealant material may be added to the mix as long as the minimum temperature of 300°F is maintained.

3.02 APPLICATION

A. Cracks shall be sealed from the bottom up. Sealant material shall be applied so it is flush with the surface.

B. Traffic shall not be allowed on the material until it has cured or until it has been sanded to prevent tracking.

End of Section

SECTION 02520 - SLURRY SEAL

CONTENTS:

Part I - General 1

1.01 Work Included 1

1.02 Related Requirements 1

1.03 Reference Standards 1

1.04 Quality Assurance 1

1.05 Measurement And Payment 1

Part 2 - Products 1

2.01 Latex Modified Asphalt Emulsion 1

2.02 Water 2

2.03 Aggregate 2

2.04 Polymer Latex 3

2.05 Mineral Filler 3

2.06 Mix Design 3

2.07 Proportioning 4

2.08 Material Sampling 5

Part 3 - Execution 5

3.01 Mixing And Spreading Equipment 5

3.02 Preparation 6

3.03 Application 6

3.04 Corrective Work 7

3.05 Public Convenience And Traffic Control 7

SECTION 02520 - SLURRY SEAL

PART I - GENERAL

1.01 WORK INCLUDED

Work on this Section includes placement of slurry seal on roadways, streets, and parking lot areas.

1.02 RELATED REQUIREMENTS

A. Section 01340, *"Submittals"*

B. Section 02500, *"Paving and Surfacing"*

C. Section 02510, *"Crack Sealing"*

D. Section 02580, *"Traffic Striping and Signing"*

E. Section 03300, *"Minor Concrete"*

1.03 REFERENCE STANDARDS

A. American Association of State Highway Transportation Officials (AASHTO)

B. State Standard Specifications

1.04 QUALITY ASSURANCE

Not used.

1.05 MEASUREMENT AND PAYMENT

Measurement and payment for provision of slurry seal will be made on either a square foot or square yard basis based on the actual area receiving slurry seal application. Payment will include costs for all work and materials specified herein.

PART 2 - PRODUCTS

2.01 LATEX MODIFIED ASPHALT EMULSION

Latex emulsified asphalt shall be a quick traffic, quick cure (QT-QC) type, shall be homogeneous and show no separation after thorough mixing, shall break and set on the aggregate within five (5) minutes and shall be ready for cross-traffic within fifteen (15) to forty-five (45) minutes. The latex asphalt emulsion shall conform to the requirements in Table 1.

TABLE 1

Test On Emulsion	Method of Test	Requirements
Viscosity, SSF, @ 77 °F, sec	ASTM D244	15 – 100
PH		2 +/- 1
Distillation Residue %, Minimum		60
Test on Residue from Distillation Test	Method of Test	Requirements
Penetration, 77 °F, 100g, 5s	ASTM D5	40 – 50
Softening Point (Ring & Ball), °F	ASTM	130+
Ductility, 77 °F (25C, 5cm/Min. Minimum)	ASTM D113	25
Fraass-Breaking Point (°C)	DIN 52012	- 18 Min.

2.02 WATER

Water shall be potable, free of soluble salts and shall be of such quality that the asphalt will not separate from the emulsion before the slurry seal is in place.

2.03 AGGREGATE

Aggregate shall consist of sound, durable, crushed stone or crushed gravel and approved mineral filler. The material shall be free from vegetable matter and other deleterious substances. Aggregates shall be 100% crushed material with no rounded particles and shall be volcanic in origin and black in color, as supplied by George Reed, Table Mountain Plant, Sonora, CA., or equal. **The use of gray or light-colored aggregate will not be allowed**. The percentage composition by weight of the aggregate shall conform to the following grading:

Percentage Passing

Sieve Sizes	**Type II**
3/8" (9.5 mm)	100
No. 4 (4.75 mm)	90-100
No. 8 (2.36 mm)	65-90
No. 16 (1.18 mm)	40-70
No. 30 (600 mm)	25-50
No. 200 (75 mm)	5-15

The aggregate also shall conform to the following quality requirements:

Test	Method of Test	Requirements
Sand Equivalent	State Method 217 Or ASTM D2419	60 Min.
Durability Index	State Method 229	55 Min.

2.04 POLYMER LATEX

Styrene butadiene rubber latex shall be added to the water/soap phase by injection prior to the mill manufacture of the asphalt emulsion by the emulsion producer. The latex shall be BASF NX 1118 or approved equal. The amount of latex solids shall be between 3 and 4 percent of the asphalt residual content and shall be certified by the emulsion producer for each load of emulsion delivered to the job site. No supplementary field addition of polymer latex will be allowed. Samples of latex shall be provided and shall conform to the following requirements.

Test	Requirements
Total Solids, min %	60
Bound Styrene %	24-60
PH at 25 Degrees C	4.2 – 5.2
Brookfield Viscosity RVT	1000-4000
Residual Monomer %	0.08 max

2.05 MINERAL FILLER

The mineral filler either shall be Portland Cement or other approved mineral filler, if required. Portland cement if used, shall be commercially available Type I or Type II, and shall be free of lumps and clods.

2.06 MIX DESIGN

At least 7 working days before slurry seal placement commences, the Contractor shall submit to the engineer for approval a laboratory report of tests and proposed mix design covering the specific materials to be used on the project. The percentage of asphalt emulsion in the mix design and application rate shall be as specified below:

Asphalt Emulsion Content (% of Type II dry aggregate)	15-17
Application Rate (Pounds/Square Yard)	14 – 18

The tests and mix design shall be performed by a laboratory capable of performing the applicable International Slurry Seal Association (ISSA) tests. The proposed slurry seal mixture shall conform to the requirements specified when tested in accordance with the following tests:

Test	ISSA Test Method	Requirements
Slurry Seal Consistency, cm	T106	3 max
Wet Stripping	T114	Pass
Compatibility	T115	Pass (a)
Cohesion Test (b), kg – cm within 1 hour	T139	20 min.
Wet Track Abrasion, g/sq. ft.	T110	75 max.

1. Mixing test must pass at the maximum expected air temperature at the project site during application.
2. Using project source aggregate asphalt emulsion and set-control agents if used.

The laboratory report shall be signed by the laboratory that performed the tests and mix design and shall show the results of the tests on individual materials, comparing the test results to those required by the specifications. The report shall clearly show the proportions of aggregate, filler (as determined from the tests, minimum and maximum), water (minimum and maximum), asphalt solids content based on the dry weight of aggregate and set-control agent usage. Previous laboratory reports covering the same materials may be accepted provided they are made during the same calendar year.

2.07 PROPORTIONING

A. Asphalt emulsion shall be added at a rate determined by the mix design and in the range of the table above. A job mix design shall be submitted by the Contractor for approval by the engineer that conforms to the specification limits, and that is suitable for the traffic, climate conditions, curing conditions and final use. This will include recommended application rate of slurry to suit the job conditions.

B. The Slurry Seal mixture shall be proportioned by the operation of a single start/stop switch or lever, which automatically sequences the introduction of aggregate, emulsified, asphalt, admixtures, if used, and water to the pug mill.

C. Calibrated flow meters shall be provided to measure both the addition of water and liquid additives to the pug mill. If necessary for workability, a retarding agent, that will not adversely affect the seal, may be used.

D. Water, and retarder if used, shall be added to ensure proper workability and (a) permit uncontrolled traffic on the slurry seal no more than three (3) hours after placement without the occurrence of bleeding, raveling, separation or other distress; and (b) prevent development of bleeding, raveling, separation of other distress within fifteen (15) days after placing the slurry seal.

2.08 MATERIAL SAMPLING

The minimum acceptable sampling frequency shall be as follows:

Asphalt Emulsion – minimum once daily
Mineral Aggregate – minimum once weekly
Application mixture – minimum once daily

All Samples of asphalt emulsion and aggregate for slurry seal shall be captured from the storage tank of the slurry seal application truck in use on the work. Inspector shall observe the sampling of 1 gallon of the emulsion, 10 lbs. of the slurry seal aggregate and 1 gallon of the mixture. Contractor shall provide the samples and containers to the Inspector. The Engineer or his representative shall be permitted to take samples of materials from the project at anytime. The agency may elect to perform testing on the samples to verify compliance of the materials with the specifications.

Testing shall be undertaken by the Engineer whenever deemed necessary. The Engineer, or his representative, may suspend the application of the slurry seal whenever changes in the materials or quality of the applied slurry are noted. Work shall resume only when the noted deficiencies are corrected to the satisfaction of the Engineer. When work is suspended for this reason, samples will be taken immediately.

The City may send samples to a testing laboratory. Testing will be at the City's expense unless deficiencies are verified by the testing. The Contractor shall reimburse the City for the cost of any testing required by deficient materials or application of the slurry mix.

PART 3 - EXECUTION

3.01 MIXING AND SPREADING EQUIPMENT

The slurry seal shall be mixed in a self-propelled mixing machine equipped with a continuous flow pug mill capable of accurately delivering and automatically proportioning the aggregate, emulsified asphalt, water and additives to a double shafted, multi-blade pug mill mixer capable of minimum speeds of 200 revolutions per minute.

A minimum of two operational mixing machines of 12 cubic yard capacity, or larger, shall be maintained on the project. The slurry seal retention time in the pug mill shall be less than three seconds. No retention of mixed slurry seal shall be allowed within the pug mill by gate shut-off or other mechanical means. The mixing machine shall have sufficient storage capacity of aggregate, emulsified asphalt, and water to maintain an adequate supply to the proportioning controls.

The mixing machine shall be equipped with hydraulic controls for proportioning the material by volume for the mix. Each material control device shall be calibrated, properly marked, present and lockable at the direction of the engineer. The mixing machine shall be equipped with a water pressure system and nozzle type spray bars to provide a water spray immediately ahead of the spreader box.

The mixing machine shall be equipped with an approved fines feeder that provides a uniform, positive, accurately metered, pre-determined amount of a mineral filler, if used, at the same time and location that the aggregate is fed.

The slurry mixture shall be uniformly spread by means of a controlled spreader box conforming to the following requirements:

A. The spreader shall be capable of spreading a traffic lane width and shall have strips of flexible rubber belting or similar material on each side of the spreader box and in contact with the pavement to prevent loss of slurry from the box. The box shall have baffles, or other suitable devices, to insure uniform application on super-elevated sections and shoulder slopes. Spreader boxes shall be maintained in such a manner as to prevent chatter (wash boarding) or other surface defects that will affect the esthetic value of the finished slurry seal mat.

B. The rear flexible strike-off blade shall make close contact with the pavement and shall be capable of being adjusted to the various crown shapes so as to apply a uniform slurry seal.

C. Slurry mixture, to be spread in areas inaccessible to the controlled spreader box, may be spread by other approved methods.

3.02 PREPARATION

Prior to application of slurry seal, all cracks ¼" wide and wider shall be sealed in accordance with requirements of Section 02510.

After crack sealing and immediately prior to the application of the slurry seal, the surface area shall be cleaned of all foreign materials such as, but not limited to leaves, sand, gravel, dirt, motor oil, paint, thermoplastic striping and vegetation. Contractor shall protect existing hydrant and lane line delineators by covering with temporary plastic or other means. The City shall approve surface preparation before sealing proceeds.

3.03 APPLICATION

A. Slurry seal shall conform to the provisions in Section 37-2, *"Slurry Seal"* of the State Standard specifications and shall not be placed when the atmospheric temperature is less the 55°F or during unsuitable weather, which includes but not limited to rainy and windy conditions.

B. The application of slurry shall not commence until after 8:30 a.m. and shall be sufficiently cured to be open to traffic by 4:00 p.m. The streets to be sealed shall be closed from the time the application begins until the engineer determines the mixture has achieved sufficient sit to be opened to traffic. Work will not be considered complete until all utility boxes and manholes are exposed.

C. Temporary pavement markers shall be placed at locations of existing striping on all slurry sealed street, if the permanent striping is not installed before the end of the workday affecting such markers and markings.

3.04 CORRECTIVE WORK

Slurry sealed areas which have been improperly prepared, are not uniform in color, have been improperly sealed, or have failed for any other reason prior to final acceptance shall be removed and redone at Contractor's expense to the satisfaction of the engineer. Slurry seal deposited on other than asphalt concrete surfaces shall be cleaned to the satisfaction of the City.

3.05 PUBLIC CONVENIENCE AND TRAFFIC CONTROL

A. At least seven working days prior to commencing the work, the Contractor shall submit his work schedule so that it will impose the least inconvenience to the public. Based upon the spreading schedule, the City shall notify residents and businesses of the proposed work by hand-distributing fliers.

B. The Contractor shall be responsible for adequate barricading of the work area and controlling of traffic in the vicinity of the project.

C. When necessary to provide vehicular or pedestrian crossings over the fresh slurry, the engineer may direct the Contractor to spread sufficient sand or rock dust on the affected area or place a wood walkway to eliminate tracking or damage to the slurry. Sand or rock dust used for this purpose shall be included in the price of the slurry seal.

End of Section

SECTION 02530 – CURB RAMPS AND OTHER MINOR CONCRETE FACILITIES

CONTENTS:

Part 1 - General 1

1.01 Work Included 1

1.02 Related Requirements 1

1.03 Inspection And Tests 1

1.04 Quality Assurance 1

1.05 Measurement And Payment 1

Part 2 - Products 2

2.01 Concrete 2

2.02 Cement 2

2.03 Aggregate 2

2.04 Pre-Molded Expansion Joint 2

2.05 Curing Compound 2

2.06 Concrete Color 2

2.07 Asphalt Concrete 2

Part 3 - Execution 3

3.01 Installation 3

SECTION 02530 – CURB RAMPS AND OTHER MINOR CONCRETE FACILITIES

PART 1 - GENERAL

1.01 WORK INCLUDED

A. The work includes the furnishing of all labor, materials, equipment, and services required to saw cut and remove designated sections of curb, gutter, and sidewalk, adjust existing utilities to grade as required and construct Portland cement concrete curb ramps to the form and dimensions shown on applicable City Standard Drawings, Project Plans and to meet existing field conditions.

1.02 RELATED REQUIREMENTS

A. Section 01340, *"Submittals"*

B. Section 03300, *"Minor Concrete"*

1.03 INSPECTION AND TESTS

All work shall be subject to the inspection of the Engineer and representatives of any other agencies having jurisdiction.

A. NOTIFICATION OF BEGINNING OF WORK: Contractor shall notify the Engineer at least twenty-four (24) hours prior to the beginning of work, to permit scheduling inspection of forms and subgrade, and to witness concrete placing. No concrete shall be placed until the Engineer has approved the forms and subgrade.

B. MILL TEST REPORTS: When so requested by the Engineer, the Contractor shall furnish mill test reports on the cement and aggregates, showing compliance with the respective specifications.

C. CERTIFICATE OF COMPLIANCE: Contractor shall submit a certificate of compliance for the Portland cement concrete mix design.

1.04 QUALITY ASSURANCE

A. The Contractor's attention is directed to Article 8 of the City's General Conditions (Section 00700). To validate that specified final elevations have been provided, the Contractor shall provide to the City applicable grade certificates as required by Article 8. No separate payment will be made for providing such certification. All cost therefore shall be included in the various work item(s) requiring certification.

1.05 MEASUREMENT AND PAYMENT

A. Measurement and payment for provision of curb ramps or other minor concrete facilities will be made on a unit price, per each, based on the actual construction of curb ramp or other facility. Payment will include costs for all required work and materials.

PART 2 - PRODUCTS

2.01 CONCRETE

Concrete shall be Class A (6 sacks cement per cubic yard), as designated in Section 90-1.02 of the State Standard Specifications.

2.02 CEMENT

Cement shall be Type II conforming to Section 90-2.01 of the State Standard Specifications.

2.03 AGGREGATE

Aggregate shall be one and one-half inch (1 ½") maximum size, conforming to Section 90-2.02 of the State Standard Specifications.

2.04 PRE-MOLDED EXPANSION JOINT

Pre-molded expansion joint shall conform to Section 51-1.12C "Pre-Molded Expansion Joint Filler," of the State Specifications and shall be one-quarter (1/4") thick by the full depth of the concrete section.

2.05 CURING COMPOUND

Curing compound shall conform to Section 90-7.01B of the State Standard Specifications for pigmented curing compounds.

2.06 CONCRETE COLOR

Color of the finished product shall match the adjacent concrete color to the maximum extent possible. Contractor shall be responsible for determining the proper quantity of additives needed to match the adjacent concrete color. Contractor shall use lamp black at the minimum rate of one and one half (1 ½) pound per cubic yard, or other coloring agents as approved to provide the color match. New concrete differing from the color of the adjacent existing concrete shall be removed and replaced to the satisfaction of the Engineer.

2.07 ASPHALT CONCRETE

Type A or Type B, 3/4" maximum medium, conforming to Section 39 of the State Standard Specifications.

PART 3 - EXECUTION

3.01 INSTALLATION

A. Location and Layout:

Ramp or facility shall be located as closely to match existing or to meet other lines shown on the plans in relation to existing score lines or other existing facilities. The limits of each ramp or facility shall be marked and approved by the Project Inspector prior to saw cutting.

B. Saw Cut:

Saw cut shall be along the limits of the facility as marked and approved by the Engineer. When new concrete is placed next to old concrete and not adjacent to an expansion joint, adjoining concrete shall be saw cut to a depth of at least one and one-half inches (1 ½") on the exposed side.

C. Demolition and Removal:

As required, concrete sidewalk, curbs and/or gutter in the designated ramp construction area shall be demolished and removed; and the concrete material removed shall be disposed of, at the Contractor's expense. All vegetation and tree roots shall be removed to allow the new construction.

D. Removal of Vegetation:

Removal of vegetation also shall include proper disposal of all shrubs, hedges and all tree roots. Root barrier shall be installed to prevent damage to new ramp from overgrown root, when called for on the Project Plans or details. Root barrier shall be installed per applicable City Standard Drawings. Payment for root barrier shall be considered as included in the unit price for installing ramps or facilities, and no additional compensation will be allowed.

E. Subgrade Preparation:

The subgrade shall be constructed true to grade and cross section meeting the required ramp slopes and warp, as shown on the plans or directed by the Engineer. It shall be watered and thoroughly compacted before placing the concrete. All soft or spongy material shall be removed to a depth of not less than 1.0 – foot below subgrade elevation for curbs, gutter depressions, and 0.75-foot below for sidewalks, and the resulting space filled with earth, sand or gravel of a quality that, when moistened and compacted, shall form a stable foundation.

The completed subgrade shall be tested for grade and cross section by means of a template supported on the side forms, and shall not project into the planned concrete cross section at any point. The subgrade and forms shall be wetted immediately in advance of placing concrete.

In areas where required, bridging shall be furnished over sidewalks for the convenience of the landholders and public.

F. Existing Utility Boxes and Signs:

All utility boxes encountered during subgrade preparation shall be set or adjusted so the top surface of said box matches the slope and elevation of the ramp or facility. Contractor shall protect existing utility boxes and other facilities during the construction. All utility boxes or other existing facilities that have been damaged shall be replaced by the contractor at his expense or by the utility company at the contractor's expense. Replacement boxes shall be purchased from the appropriate agency (City, Communication Companies, Gas and Electric Company, Water Company, etc.). Existing water valve boxes, sewer vent and street light boxes that were broken before the construction will be furnished by the City upon the request from the contractor before the construction.

All utility boxes or other existing facilities that have been damaged shall be replaced by the Contractor at his expense or by the utility company before the concrete is placed. Existing signs and other facilities within the ramp area shall be removed and/or relocated as shown on the Plans or as directed by the Engineer.

G. Existing Irrigation System

Contractor shall protect existing irrigation system including but not limited to sprinkler head and irrigation line. Damage to irrigation system shall be fixed at the contractor's own expense.

H. Forms:

Forms shall be carefully set to alignment and grade, and shall have a smooth straight upper edge. The depth of forms for back of curbs shall be equal to the full depth of the curb. The depth of face forms for concrete curbs shall be equal to the full-face height of curb. The depth of forms for sidewalks, driveway aprons and gutters shall be equal to the full depth of the concrete.

Form boards for sidewalks, driveway aprons and gutters shall be of sufficient width to form the entire depth of the section with one board. Piecing with narrow battens or scabs will not be permitted. Benders of thin plank forms may be used on curves, grade change curves, or for curb returns.

Forms shall be held rigidly in place by stakes placed at necessary intervals. Clamps, spreaders and braces shall be used where required to insure rigidity of the forms.

Curb face forms shall not be removed until more than two (2) hours after the concrete has been placed. In no event shall forms be removed while the concrete is sufficiently plastic to slump. Side forms for sidewalks, driveway aprons and gutters shall not be removed in less than forty-eight hours after the finishing has been completed.

Gutter portion of the ramp shall be formed as per applicable City Standard Drawings. A 12" wide asphalt concrete strip shall be removed along the lip of the gutter to allow placing of the form.

Forms that may inhibit safe access to the corner of pedestrians or present tripping hazard will be installed only on the day of concrete placement. The Engineer shall be notified for form inspection a minimum of 24 hours before placement of concrete.

I. Expansion Joints:

One-quarter inch (1/4") wide expansion joints shall be constructed at both ends of the curb ramp unless directed otherwise by the Engineer. Expansion joint filler shall be shaped to the cross section of the concrete being placed.

J. Mixing and Placing Concrete:

Ready-mix and job-mixed concrete shall conform to the pertinent requirements as set forth in Sections 90-6.01 through 90-6.05 of the State Standard Specifications.

Consistency and Penetration – Concrete shall be of a consistency as set forth in Section 90-6.06 of the State Standard Specifications.

K. Site Cleanup:

Care shall be exercised to prevent concrete from splashing on existing improvements, such as buildings, street lighting electroliers, and fire hydrants. If splashing does occur, all such surfaces shall be cleaned before spatter hardens.

L. Finishing Concrete:

1. Curbs and Gutters – Prior to removal of forms, the top surfaces shall be finished true to grade by means of a straight edge float operated longitudinally over the surface of the concrete. Form clamps shall be constructed so as not to interfere with the operation of this float.

   Immediately after removing the front curb forms, all exposed surfaces shall be troweled smooth, the top edges of the curb rounded as shown on the drawings, and all exposed surfaces given a final fine brush finish with brush strokes parallel to the line of curb.

   The top and face of the finished curb shall be true straight, and the top surface of curb shall be of uniform width free from humps, sags, or other irregularities.

   When a straight edge ten feet (10') long is laid on top or face of the curb, or on the surface of gutters, the surface shall not vary more than 0.01 foot from the edge of the straight edge except at grade changes or curves.

   All exposed surfaces shall be spray cured with a resin base compound containing a completely dissipating red fugitive dye to facilitate inspection.

2. Ramps – Fresh concrete shall be struck off and compacted until a layer of mortar has been brought to the surface. The surface shall be finished to grade and cross section with a float troweled smooth and finished with a broom as shown in an applicable City Standard Drawings. Brooming shall be transverse to the line of traffic.

   The surface shall not vary more than 0.02 foot from a ten-foot (10') straight edge, except at grade changes and the finished surface shall be free from blemishes.

   All exposed surfaces shall be spray cured with a resin-based compound containing a completely dissipating red fugative dye to facilitate inspection.

M. Curing:

Concrete shall be cured in accordance with the pertinent requirements as set forth in Section 90-7.01B of the State Standard Specifications.

N. Asphalt Concrete:

The 12" wide strip along the lip of the gutter shall be plugged with 9" deep lift asphalt concrete. Tack coat shall be applied to all surfaces to be in contact with the asphalt concrete.

O. Time Limit:

The Contractor shall complete installation curb ramps or island pathway within two working days after removal of existing concrete.

P. Written Notices:

The Contractor shall notify property owners whose walkways are affected by the proposed construction, a minimum of forty-eight (48) hours prior to the construction of the ramps. All notices to be posted by the Contractor shall be approved by the Engineer.

End Of Section

SECTION 02580 - TRAFFIC STRIPING AND SIGNING

CONTENTS:

Part 1 - General 1

1.01 Work Included 1

1.02 Related Requirements 1

1.03 Reference Standards 2

1.04 Quality Assurance 2

1.05 Measurement And Payment 2

Part 2 - Products 2

2.01 Pavement Traffic Striping Markers 2

2.02 Pavement Markings 2

2.03 Painted Stripes And Pavement Markings 3

2.04 Temporary Reflective Pavement Markers 3

Part 3 - Execution 3

3.01 Application 3

SECTION 02580 - TRAFFIC STRIPING AND SIGNING

PART 1 - GENERAL

1.01 WORK INCLUDED

A. Traffic Striping Markers (Traffic Lines)

1. Longitudinal centerlines and lane lines which separate traffic lanes in the same or opposing direction of travel, and longitudinal edgelines which mark the edge of the traveled way.

2. Fire hydrant markers.

B. Pavement Markings

1. Transverse markings that include, but are not limited to, word and symbol markings, limit lines (stop lines), crosswalk, shoulder markings, and parking stall markings. At the designation of the Engineer, longitudinal centerlines, lane lines and edge lines may be included.

2. Existing pavement marking damaged during construction shall be restored to equal or better condition as approved.

C. Temporary Pavement Delineation

1. Temporary pavement delineation shall be furnished, placed, maintained and removed in accordance with the provisions in Section 12-3.01, *"General"*, of the *State Specifications* and these specifications. Nothing in these specifications shall be construed as to reduce the minimum standards specified in the *Manual of Traffic Controls* published by the Department of Transportation or as relieving the Contractor from his responsibility as provided in Section 7-1.09, *"Public Safety,"* of the State Specifications.

2. Lane line or centerline pavement delineation shall be provided at all times for traveled ways open to public traffic. Whenever the work causes obliteration of pavement delineation, temporary pavement delineation or permanent traffic stripes shall be in place prior to opening the traveled way to public traffic.

1.02 RELATED REQUIREMENTS

Not Used

1.03 REFERENCE STANDARDS

A. State Specifications

B. State of California Department of Transportation Manual of Traffic Controls

1.04 QUALITY ASSURANCE

Not Used

1.05 MEASUREMENT AND PAYMENT

A. Single and Double Traffic Striping Markers (Traffic Lines) will be paid for per Linear Foot, measured along the line of the traffic stripes, without deduction for gaps (regardless of the number, widths, and pattern or individual striping markers involved in each traffic stripe).

B. Painted Stripes and Markings and Thermoplastic Pavement Marking will be paid for per Square Foot, measured from the actual area applied.

C. Where specified, individual pavement markers will be paid for per each of the applicable type installed.

D. Unless otherwise specified, no separate payment will be made for temporary markings. All costs therefor shall be borne by the contractor.

E. If specified in the Special Provisions, payment for all work and materials specified under Section 02580 will be made on a lump sum basis.

PART 2 - PRODUCTS

2.01 PAVEMENT TRAFFIC STRIPING MARKERS

A. Non-Reflective Markers shall conform to Section 85-1.04, *"Non-Reflective Pavement Markers,"* of the *State Specifications*.

B. Reflective Pavement Markers shall conform to Section 85-1.05, *"Reflective Pavement Markers,"* of the *State Specifications*. Hydrant markers shall be blue in color.

2.02 PAVEMENT MARKINGS

A. Thermoplastic material and glass beads shall be furnished by the contractor and shall conform to Section 84-2.02, *"Materials,"* of the *State Specifications.*

2.03 PAINTED STRIPES AND PAVEMENT MARKINGS

A. Provide "fast dry" paint in conformance with Section 84-3 of the State Specifications.

2.04 TEMPORARY REFLECTIVE PAVEMENT MARKERS

A. The temporary reflective pavement markers shall be, at the option of the Contractor, one of the following or equal:

1. Temporary Overlay Marker (Types Y and W) manufactured by Davidson Plastics Company, 18726 East Valley Highway, Kent, Washington 98032, Telephone (206) 251-8140.

2. Safe-Hit Temporary Pavement Marker manufactured by Safe-Hit Corporation, 930 West Winton Avenue, Building #11, Hayward, CA 95545.

3. Swareflex Pavement Marker (Models 3553, 3554, Cat Eyes Nos. 3002 and 3004), manufactured by Swareco and distributed by Servtech Plastics, Inc., 1711 South California Street, Monrovia, CA 91016, Telephone (818) 359-9248.

4. Stimsonite Construction Zone Marker (Model 66) manufactured by Amerace Corporation, Signal Products Division, 7542 North Natchez Avenue, Niles, IL 60648, Telephone (312) 647-7717.

5. Flex-O-Lite Raised Construction Marker (RCM) manufactured by Flex-O-Lite, Lukens Company, P. O. Box 4366, St. Louis, MO 63123-0166, Telephone (800) 325-9525.

6. 3M Scotch-Lane A200 Pavement Marking System (reflective raised pavement marker on reflective traffic line tape) manufactured by 3M Company, Traffic Control Materials Division, 223-3N 3M Center, St. Paul MN 55144.

7. MV Plastics Chip Seal Marker (1280/1281 Series), manufactured by MV Plastics, Inc., 533 W. Collins Avenue, Orange CA 92667 Telephone (714) 532-1522.

PART 3 - EXECUTION

3.01 APPLICATION

A. Single and Double Traffic Striping Markers (Traffic Lines) shall be placed in accordance with Section 85-1.06, *"Placement,"* of the *State Specifications* and applicable *City Standard Drawings*.

B. Thermoplastic Pavement Markings shall be placed in accordance with Section 84-2.04, *"Application,"* of the *State Specifications*.

C. Where specified, provide two coats of painted stripes or markings in accordance with Section 84-3 of the State Specifications.

D. Temporary Pavement Delineation

1. Temporary pavement delineation for lane lines and centerlines shall consist of temporary reflective pavement markers placed at longitudinal intervals of not more than 24 feet apart. Temporary reflective pavement markers shall be the same color as the lane line or centerline the temporary pavement markers replace.

2. Surfaces on which temporary pavement delineation is to be applied shall be cleaned of all dirt and loose material and shall be dry when the pavement delineation is applied.

3. All work necessary to establish satisfactory lines for temporary pavement delineation shall be performed by the Contractor.

4. Temporary pavement delineation that is damaged from any cause during the progress of the work shall be immediately repaired or replaced by the Contractor at his expense.

5. Temporary reflective pavement markers shall be applied in accordance with the manufacturer's recommendations. Butyl adhesive pads shall be used to apply temporary reflective pavement markers to the top layer of permanent surfacing or existing surfacing.

6. When temporary pavement delineation is applied to the top layer of permanent surfacing, planned permanent traffic striping (including edgelines) and pavement markings shall be applied within ten (10) calendar days after the lanes have been opened to public traffic.

7. Temporary pavement delineation shall be maintained until replaced with the planned permanent pavement striping. When no longer required, temporary pavement delineation that conflicts with permanent pavement delineation, as determined by the Engineer, shall be removed and disposed of in accordance with the provisions in Section 7-1.13, *"Disposal of Material Outside the Highway Right-of-Way,"* of the *State Specifications*.

8. Regardless of the number of times required, full compensation for furnishing, placing, maintaining, and replacing temporary pavement delineation (including the signing specified for "NO PASSING" zones), and for removal and disposal of the temporary reflective pavement markers will be considered as included in the contract price(s) paid for the final, "permanent" items of work.

End of Section

SECTION 02710 – POTABLE WATER SYSTEM PIPING AND ACCESSORIES

CONTENTS:

Part 1- General 1

1.01 Work Included 1

1.02 Related Work 1

1.03 Reference Standards 1

1.04 Quality Assurance 2

1.05 Measurement And Payment 2

1.06 Submittals 5

1.07 Potholing (Checking On Utility Locations) 6

Part 2 - Products 7

2.01 General 7

2.02 Pipeline Material 7

2.03 Fire Hydrants 8

2.04 Valves 9

2.05 Valve Boxes 11

2.06 Raising Rings For Traffic Valve Boxes 12

2.07 Backfill Materials 12

2.08 Concrete For Thrust Blocks 12

2.09 Water Service (2" Or Less) 12

2.10 Water Service (3" And Larger) 13

2.11 Fire Service And Backflow Device 13

2.12 Combination Air Release Valves 14

2.13 Bolted (Sleeve-Type) Couplings 14

2.14 Tapping Sleeve 14

2.15 Full Circle Repair Clamps 15

TABLE OF CONTENTS continued:

2.16 Valve Stem Extensions 15

2.17 Appurtenances 15

2.18 Saddles 16

2.19 Flanged Coupling Adaptor 16

2.20 Items Furnished By The City 16

2.21 Meter Boxes And Vaults 17

2.22 Specialty Items 17

Part 3 – Execution 17

3.01 Trench Excavation And Backfill 17

3.02 Trench Excavation 17

3.03 Trench Backfill 18

3.04 Compaction 20

3.05 Utility And Water Pipe Clearances 20

3.06 Pipe Laying 21

3.07 Water Main Tapping 21

3.08 Water Service 22

3.09 Service Replacement 22

3.10 Combination Air Release Valves 23

3.11 Hydrostatic Testing 23

3.12 Flushing and Chlorinating 25

3.13 Construction Procedure, Connections And Water System Shutdowns 28

3.14 Pavement Replacement 29

3.15 Valve Boxes 30

3.16 Abandonment of Existing Facilities 30

3.17 Repair/Restoration of Property 31

3.18 Pipe Abandonment 31

3.19 As-Built Drawings 32

SECTION 02710 – POTABLE WATER SYSTEM PIPING AND ACCESSORIES

PART 1- GENERAL

1.01 WORK INCLUDED

A. This work shall include furnishing of all labor, materials, equipment, and incidentals required to construct and complete all the work including all appurtenances necessary for the water system improvements and ready for connection to the City's potable water system network as designated on the plans and these specifications in compliance with all applicable codes and regulations.

B. Contractor, when installing new services, shall be responsible for bringing the house line at meter connection to grade, as per applicable City Standard Drawings.

C. Stormwater Pollution Prevention Requirements - The contractor shall comply with the City's NPDES Stormwater Waste Discharge permit #CA0029921 for discharges to the storm drain system, including adherence to all applicable Best Management Practices to prevent pollutants, including sediment, from entering the storm drains.

The developer/contractor shall provide an adequate Stormwater Pollution Prevention Plan (SWPPP) for all applicable projects prior to commencing any phase of construction. The SWPPP shall comply with the current General Permit for Construction Activity from the California Regional Water Quality Control Board and/or the current San Mateo Countywide Water Pollution Prevention Program permit.

1.02 RELATED WORK

A. Section 01340, *"Submittals"*

B. Section 02221, *"Trench Excavation and Backfill"*

C. Section 02500, *"Paving and Surfacing"*

1.03 REFERENCE STANDARDS

A. American Water Works Association (AWWA)

B. American Society for Testing and Materials (ASTM)

C. State Specifications

D. Materials Manual, State of California, Highway Transportation Manual

E. National Fire Protection Association (NFPA)

F. Uniform Plumbing Code (UPC)

G. Uniform Building Code (UBC)

1.04 QUALITY ASSURANCE

A. All materials and equipment furnished under this Section shall:

1. Be of a manufacturer who has been regularly engaged in the design and manufacture of the materials and equipment for at least five (5) years meeting the standards of the American Water Works Association; and

2. Be demonstrated to the satisfaction of the City's Project Inspector that the quality is equal to the materials and equipment made by those manufacturers specifically named herein, if an alternate product manufacturer is proposed. The City's Project Inspector shall obtain the required submittal reviews, inspections, and approvals from the DWWR Representative.

B. The Contractor's attention is directed to Article 8 of the City's General Conditions (Section 00700). To validate that specified final elevations have been provided, the Contractor shall provide to the City applicable grade certificates as required by Article 8. No separate payment will be made for providing such certification. All costs therefore shall be included in the various work item(s) requiring certification.

1.05 MEASUREMENT AND PAYMENT

A. Pipe

1. The quantity of pipe to be paid for will be the length placed (including fittings) and accepted by the City's Project Inspector, measured to the nearest foot, except that no payment will be allowed for pipe placed in excess of the length specified or shown on the plans.

2. The price per linear foot of pipe shall constitute full compensation for furnishing all labor, materials, tools, and equipment, and doing all work involved in furnishing and installing the pipe, complete in place, as specified and shown on the plans, including probing and locating other utilities, excavation, mechanical restraint systems and thrust blocks, connecting rods, elbows, tees, crosses, valve boxes for identification of horizontal bends, backfill, base aggregate, pavement restoration, sidewalk restoration, sheeting and shoring, ditching, diking, pumping, bailing, draining, testing, inspection, disinfection, furnishing and maintaining all traffic barricades, signs, lights, and all other work and materials required but not included in other bid items.

B. Fire Hydrants

1. Fire hydrants will be paid for at the unit price bid per hydrant assembly including bury, hydrant extension, valve, hydrant, hydrant caps, thrust block, pipe, bollards, connection to the main, replacement of pavement, sidewalk, curb and gutter, and landscaping.

2. Payment will constitute full compensation for furnishing all labor, materials, tools, and equipment, and doing all work involved in furnishing and installing the pipe, complete in place, as specified and shown on the plans, including probing and locating other utilities, valve, valve box and cover, valve tube, hydrant, hydrant bury, break-off riser, excavation and backfill thrust blocks,

   connecting rods, elbows, tee, backfill, base aggregate, pavement restoration, sidewalk restoration, sheeting and shoring, ditching, diking, pumping, bailing, draining, testing, inspection, disinfection, furnishing and maintaining all traffic barricades, signs, lights, and all other work and materials required but not included in other bid items to complete the work as per applicable City Standard Drawings and these specifications.

C. Water Services

1. The number of water services will be measured and paid for at the unit price bid per service including pipe, fittings, corporation stop, connection to main, curb stop, saddle, bypass valve and piping, pavement, sidewalk, curb and gutter, driveway replacement, and landscaping.

2. Payment will constitute full compensation for furnishing all labor, materials, tools, and equipment, and doing all work involved in furnishing and installing the pipe, complete in place, as specified and shown on the plans, including probing and locating other utilities, excavation and backfill, thrust blocks, connecting rods, lead joint repair clamps, elbows, tees, adjustment of house lines with approved materials per the City's Project Inspector's direction if necessary, crosses, backfill, base aggregate, pavement restoration, sidewalk restoration, sheeting and shoring, ditching, diking, pumping, bailing, draining, testing, inspection, disinfection, furnishing and maintaining all traffic barricades, signs, lights, and all other work and materials required but not included in other bid items to complete the work in accordance with the Project Plans & Specifications and the City's Standard Drawings and these Specifications.

3. If not otherwise specified, when used to describe water services, the term "long" will refer to services crossing the street centerline, and the term "short" will mean services not crossing the street centerline.

D. Fire Services

1. The number of fire services will be measured and paid for at the unit price bid per service including supply backflow assembly (including valves), pipe, fittings, valves, valve boxes, saddles, connection to main, bypass valve and piping, detector check, box with extension or vault, and required meter trim, pavement, sidewalk, curb and gutter, driveway replacement, and landscaping.

2. Payment will constitute full compensation for furnishing all labor, materials, tools and equipment, and doing all work involved in furnishing and installing the pipe, complete in place, as specified and shown on the plans, including probing and locating other utilities, excavation, thrust blocks, connecting rods, elbows, tees, crosses, backfill, base aggregate, pavement restoration, sidewalk restoration, sheeting and shoring, ditching, diking, pumping, bailing, draining, testing, inspection, disinfection, furnishing and maintaining all traffic barricades, signs, lights, and all other work and materials required (but not included in other bid items) to complete the work as per applicable City Standard Drawings and these specifications.

E. Valves and Valve Boxes

1. Payment for each valve will constitute full compensation for furnishing all labor, materials, tools and equipment, and doing all work involved in furnishing and installing the specified valve type, including valve box and cover, valve tube and valve stem extension, if necessary, complete in place, as specified and shown on the plans, including probing and locating other utilities, excavation, removal of existing valve(s), pipe line, appurtenances, thrust blocks, connecting rods, backfill, base aggregate, pavement restoration, sidewalk restoration, sheeting and shoring, ditching, diking, pumping, bailing, draining, testing, inspection, disinfection, furnishing and maintaining all traffic barricades, signs, lights, and all other work and materials required (but not included in other bid items) to complete the work as per applicable City Standard Drawings and these specifications.

F. Tapping Sleeves and Tapping Gate Valves

1. Full compensation will be considered included in other bid prices if the Special Provisions have no specific bid item for tapping sleeves and tapping gate valves.

G. Blow-Off

1. This installation will be measured and paid for at the unit bid price for complete installation, including connection to and/or tapping of the main, valve boxes, pipe saddle, valve and all necessary appurtenances, complete in place.

2. Payment will constitute full compensation for furnishing all labor, materials, tools and equipment, and doing all work involved in furnishing and installing the pipe, complete in place, as specified and shown on the plans, including probing and locating other utilities, excavation, thrust blocks, connecting rods, elbows, valve or meter boxes, valve stem extensions, if necessary, backfill, base aggregate, pavement restoration, sidewalk restoration, sheeting and shoring, ditching, diking, pumping, bailing, draining, testing, inspection, disinfection, furnishing and maintaining all traffic barricades, signs, lights, and all other work and materials required but not included in other bid items to complete the work as per applicable City Standard Drawings and these specifications.

H. Combination Air Release Valve

1. This installation will be measured and paid for at the unit bid price for a complete installation, including the tapping of the main, service and fittings, valve, valve box, and all appurtenances.

2. Payment will constitute full compensation for furnishing all labor, materials, tools and equipment, and doing all work involved in furnishing and installing the pipe, complete in place, as specified and shown on the plans, including probing and locating other utilities, excavation, thrust blocks, connecting rods, elbows, specified valve, tapping of the main, meter box, pipe saddle, backfill, base aggregate, pavement restoration, sidewalk restoration, sheeting and shoring, ditching, diking, pumping, bailing, draining, testing, inspection, disinfection, furnishing and maintaining all traffic barricades, signs, lights, and all other work and materials required but not included in other bid items to complete the work as per applicable City Standard Drawings and these specifications.

I. Abandoning of Existing Facilities

1. This work will be measured and paid for as stated in the bid schedule either for each location or lump sum for the total job; with payment including all necessary salvage, excavation, backfill, surface restoration, removal of old tap, valve, tee, installation of new pipe, clamp couplings and all appurtenances and incidental work necessary to complete the work as specified and shown.

1.06 SUBMITTALS

A. Shop Drawings

1. Layouts and Schematics: Contractor shall submit detailed installation drawings to the City's Project Inspector of all piping and connected equipment for pump stations, valve pits, reservoirs and tanks. The drawings shall include each pipe, all fittings, valves, and other appurtenances.

2. Layouts for all main connections after verification of field conditions and utility locations. USA notifications must be submitted.

B. Shutdowns and Connections

1. Contractor shall submit to the City's Project Inspector a list and schematics of all required water system connections and shutdowns for the project. This data shall be submitted during the first five (5) working days.

2. Shutdown Schedule as described in Section 3.09, G.

3. For all shutdowns, the Fire Department shall receive 48-hour (minimum) prior notice.

C. Compliance

1. Submit data and affidavits to show that each water system component conforms to the specification requirements.

2. Submit certified test reports as required by these specifications.

3. Disinfection Schedule and Procedures including:

a. Disinfection schedule, including number and type of services and length of disruption of service.

b. Procedures to be followed, including list of equipment to be used and disinfecting agent to be used.

D. Manuals

1. The Contractor shall furnish manufacturer's installation and operation manuals, bulletins, and spare parts lists for all operating components of the water system project, including:

a. All valves

b. Air release valves

E. Materials

1. Submittals shall be approved before the installation of the materials.

1.07 POTHOLING (CHECKING ON UTILITY LOCATIONS)

A. The shop drawings shall be completed only after the locations of all utilities in a particular section of pipeline have been verified by potholing by the Contractor. Potholing is to be done by hand or vacuum type equipment. The final order for materials shall be completed after approval of the shop drawings by the Engineer.

PART 2 - PRODUCTS

2.01 GENERAL

A. Pipe and valve sizes are nominal inside diameter unless otherwise noted.

B. All materials delivered to the job site shall be new, free from defects, and marked to identify the material, class, and other appropriate data such as thickness for piping. All materials shall be properly and safely stored to protect from damage, vandalism and contamination.

C. Acceptance of materials shall be subject to strength and quality testing in addition to inspection of the completed product. Acceptance of installed piping systems shall be based on inspection and leakage and bacteriological tests as specified hereinafter.

D. Regardless of the provisions of Paragraph 38, "OR EQUAL CLAUSE" of Section 00700 of these specifications, only the products listed under the specified material for hydrants, and buried iron-body gate valves or butterfly valves will be accepted.

2.02 PIPELINE MATERIAL

A. Water mains shall be ductile-iron pipe. Under special circumstances, other materials may be used as alternates when specifically approved in writing by the City's Project Inspector.

B. Ductile iron pipe, four inch (4") and larger, shall be in conformance with **AWWA C 151**. Pressure Class 350, meeting AWWA C 150, "Thickness Design of Ductile-Iron Pipe," and shall be furnished with mechanical joints or push-on joints. Pipe shall be cement-lined conforming to AWWA C 104, "Cement-Mortar Lining for Ductile-Iron Pipe and Fittings for Water." All pipes shall be tested according to ANSI/AWWA specifications. The pressure class, net weight of pipe without lining, length of pipe, and name of manufacturer shall be clearly marked on each length of pipe and shall conform to AWWA C 151, "Ductile-Iron Pipe, Centrifugally Cast for Water and Other Liquids," and AWWA C 104, "Cement-Mortar Lining for Ductile-Iron Pipe and Fittings for Water".

1. Joints: Pipe shall be mechanical joint or "Tyton" joint furnished according to ANSI A 21.11 (AWWA C 111), "Rubber Gasket Joints for Ductile-Iron Pressure Pipe and Fittings, three (3) inch through forty eight (48) inch for Water and Other Liquids," or equal, and furnished with complete accessories. "Tyton" joints shall be bell and spigot with "push-on" rubber gaskets conforming to Section 11-2.3 of ANSI A 21.11. Rubber gaskets shall be "Field LOCK Gasket" type or approved equal.

2. Fittings: Fittings shall be mechanical or flanged joints, Class 125, conforming to AWWA C 110, "Ductile-Iron and Gray-Iron three (3) inch through forty eight (48) inch for Water and Other Liquids," or AWWA C 153 "Ductile-Iron Compact Fittings, three (3) inch through twenty four (24) inch for water and other liquids," and AWWA C 104, "Cement-Mortar Lining for Ductile-Iron Pipe and Fittings for Water." All fittings shall be marked in accordance with Section 10-11 of AWWA C 110.

   a. Flanged bolts and hexnuts shall be of low-carbon steel, 60,000-psi tensile strength, and conform to AWWA C 115.

   b. Mechanical joint T-bolts and hexnuts shall be of corrosion resistant, low-alloy, high-strength steel ("Cor-Ten" or equal) having a minimum yield strength of 45,000 psi and conforming to AWWA C 111.

   c. All mechanical joint fittings shall be restrained with an approved joint restraint system, "Megalug" by EBBA, "AQUAGRIP" by Mueller or approved equal that has a pressure rating suitable for the thickness of pipe specified by the manufacturer.

   d. In addition, to provision of mechanical joint restraints, all fittings and bends shall be restrained by poured in-place concrete thrust blocks.

3. Polyethylene Encasement (to be used only when required): Pipe, fittings, and valve encasements shall be polyethylene film conforming to AWWA C 105 "Polyethylene Encasement for Ductile Iron Piping for Water and Other Liquids".

2.03 FIRE HYDRANTS

Hydrants shall be wet-barrel with a cast-iron body with one four and one half (4-1/2) inch outlet and one two and one half (2-1/2) inch outlet, unless otherwise specified on the drawings or in the Special Provisions, and shall conform to applicable sections of AWWA C 503, "Wet-Barrel Fire Hydrants". Hydrants shall have the proper color-coded caps to conform to NFPA Standard 291. Cap manufacturer information can be requested from the project engineer. Hydrants are to be painted per drawings W-5 and 6 after final installation.

A. Cast-Iron Body

1. Residential Applications

   a. Clow Model No.425, One two and one half (2-1/2) inch Outlet and One four and one half (4-1/2) inch Outlet

2. Commercial Applications

   a. Clow Model No.430, Two -two and one half (2-1/2) inch Outlets and One four and one half (4-1/2) inch Outlet

B. If bronze body hydrants are required (instead of cast-iron), they shall have a polished finish, and shall be protected with a transparent coating to prevent corrosion. They shall not be painted. Submittals must be reviewed for acceptance prior to installation.

2.04 VALVES

A. General

1. All valves, shall be non-rising stem (NRS), opening left (counter-clockwise), and the stem shall be fitted with a two-inch (2") square operating wrench nut. The operating nut shall be within eighteen inches (18") to twenty-four inches (24") below the final grade utilizing stem extensions, as required.

2. Valves in pump stations and other special facilities shall be equipped with handwheels.

3. Each valve shall have the maker's initials, pressure rating, and year of manufacture cast on the body. Furnish affidavit of compliance.

4. Bolts, nuts and T-bolts for connecting valves to pipe shall be the same as for pipe and fittings.

5. In addition to thrust blocks, all mechanical joint fittings shall be restrained with an approved joint restraint device, "Megalug" by EBBA or approved equal, that has a pressure rating suitable for the thickness of pipe specified.

B. Buried Iron-Body Gate Valves (Sizes from four (4) inch to eight (8) inch):

1. Gate valves shall be conforming to all applicable requirements of AWWA C 509 "Resilient Seated Gate Valves for Water Supply Service".

2. Gate valves shall have iron body with fusion epoxy coated interior and exterior surfaces of a nominal thickness of ten mils (0.010") meeting the applicable requirements of AWWA C 550 "Protective Epoxy Interior Coatings for Valves and Hydrants."

3. Gate valves shall have a minimum working pressure of 250 psig.

4. The following "Resiliant Wedge" gate valve models are the only acceptable valves:

a. Sizes less than four (4) inch:

Mueller A-2360-6	Flange x Flange
Mueller A-2360-8	Threaded x Threaded
US Pipe 5150	Flange x Flange

b. Sizes four (4) inch to eight (8) inch:

Mueller A-2360-6	Flange x Flange
Mueller A-2360-16	Flange x Mechanical Joint
Mueller A-2360-20	Mechanical Joint x Mechanical Joint

c. Tapping valves sizes four (4) inch to eight (8) inch:

Mueller T-2360-16	Flange x Mechanical Joint

C. Butterfly Valves, sizes greater than eight (8) inch ":

1. Butterfly valves shall conform to AWWA C 504, "Rubber-Seated Butterfly Valves," Class 150B (maximum flow of sixteen (16) feet per second – one hundred fifty (150) psig upstream/150 psig downstream) rated for a minimum working pressure of one hundred fifty (150) psig. Valve shall be short-body type of cast iron with an epoxy coating on the interior waterway, including the disc, of at least ten (10) mils (0.010"). Disc shall be of cast iron, and it shall have a rubber seat provided on the valve body. Valve shaft shall be Type 304 stainless steel. Actuator must be rated for minimum foot-pound torque rating in AWWA C 504 - Table 4.

2. Butterfly valves shall be the following:

Mueller B-3211 - 16	Flanged
Mueller B-3211 - 19	Flange x M.J.
Mueller B-3211 - 23	M.J. x M.J.
M & H Series 450 (12")	Flanged or M.J.
M & H Series 4500 (14" up)	Flanged or M.J.
Pratt 2F11	Flanged or M.J.

D. Meter Bypass Valves

Shall Be:

Sizes less than four (4) inch:

Mueller A-2360-6	Flange x Flange
Mueller A-2360-8	Threaded x Threaded
US Pipe 5150	Flange x Flange

Sizes four (4) inch to eight (8) inch ":

Mueller A-2360-6	Flange x Flange
Mueller A-2360-16	Flange x Mechanical Joint
Mueller A-2360-20	Mechanical Joint x Mechanical Joint

E. Backflow Devices

1. Backflow devices for City of Daly City projects shall be Wilkins "Reduced Pressure Principle Type" or equivalent and approved through submittal to the DWWR before installation. All backflows to be owned by the City of Daly City must be caged. If chain link is to be used # nine (9) green epoxy coated mesh fabric shall be used. All posts and hardware shall be hot dipped galvanized finish.

F. Check Valves

1. Swing-type, gravity-operated check valves shall comply with the applicable parts of AWWA C 508, "Swing-Check Valves for Waterworks Service, two (2) inch Through twenty four (24) inch NPS". Check valves shall have bronze disc facing, iron body, bronze mounted, and O-ring sealed stuffing box. Valves two and one half (2-1/2) inch through twelve (12) inch shall be rated for one hundred seventy five (175)-psig minimum working pressure, have flanged ends, and be installed only in a horizontal position.

2. Check valves shall be the following:

Manufacturer	Size in Inches
Mueller #A-2600-6	2-1/2 to 16
Stockham #931	2 to 16
American-Darling #52SC	2 to 16

G. PRV Valves

1. Pressure reducing/regulating/relief valves shall be approved through the submittal process and will be addressed on a case by case basis.

H. Air/Vacuum Relief Valves

1. Air/vacuum relief valves shall be approved through the submittal process and will be addressed on a case by case basis.

2.05 VALVE BOXES

A. Each valve shall be equipped with a valve box, complete with cover. Boxes shall be extension type with a slide type adjustment. The word "WATER" shall be cast on the cover. The boxes shall be adapted without full extension to the depth of cover required over the pipe at the valve location. Christy #G-5 traffic valve box shall be used in streets and sidewalks and #FL8 curb valve box with #FL8C "Concrete" lid shall be used in other locations.Valve boxes and valve box lids shall be of matching brand, type and model. Water valve and angle marker lids shall be cleaned, primer-painted and coated with Dunn-Edwards "Precaution Blue #22", or matching permanent blue paint and hydrant valve lids shall be cleaned, primer-painted and coated with Dunn- Edwards "Safety Red #221", or matching permanent red paint.

B. Valve boxes for identification of horizontal alignment changes (bends) shall be 10 ¼" inside diameter with triangular cover. The word "RECYCLED WATER" shall be cast on the cover. The cover shall be cleaned, primer-painted and coated with permanent magenta paint. The boxes shall be adapted with full extension to the depth required over the pipe at an elbow location. Boxes shall be Brooks Products, Inc. #4-TT Series or Christy Products, Inc. #G-4.

C. Sleeves or tubes for all valve and valve box identifications shall be eight (8) inch PVC, Schedule 40, one piece and shall rise to six inches (6") below street, sidewalk or finish grade.

2.06 RAISING RINGS FOR TRAFFIC VALVE BOXES

A. Adjusting rings shall not be used. Valve boxes must be raised to grade. Risers are to be replaced if and when necessary to comply with section 2.05, C, above.

2.07 BACKFILL MATERIALS

A. Shall be as specified under Section 02221 of these Specifications and applicable City Standard Drawings.

B. Initial backfill material in ground saturated by water shall be granular material, clean and free of clay, silt or organic matter, and shall be Class 1, Type B, conforming to the requirements of Section (68-1.025, "Permeable Material," of the State Specifications.

2.08 CONCRETE FOR THRUST BLOCKS

A. Concrete for thrust blocks shall conform to Section 03300, "Minor Concrete," of these specifications.

B. Concrete for thrust blocks shall not be hand mixed.

2.09 WATER SERVICE (TWO (2) INCH OR LESS)

A. Connections to existing mains shall be by the hot-tap method.

B. Water service assembly shall include pipe, fittings, corporation stops, service saddle, curb stops, and meter boxes conforming to City Standard Drawings Nos. W-1, W-2 and W-3. Copper, two inch (2") either shall be Type K (soft) or Type L rigid copper, conforming to the requirements of ASTM B 88, "Specification for Seamless Copper Water Tube." Copper tubing shall be continuous with no joints.

C. Commercial water services two (2) inches and greater shall incorporate Mueller A-2360 resilient wedge type gate valve at the connection to the main.

D. Customer's pipe shall be adjusted, relocated and/or realigned at least six inches (6") beyond the new meter box (customer's side) in order to set the water meter at the proper depth with only the following materials:

1. Brass pipe and nipples (ASTM B 43) bronze fittings.
2. Copper tubing and fittings (ASTM B 88).

E. Compression fittings for copper pipe and tubing shall have complete full-circle type compression nuts and one-piece companion ring-seal. Setscrew, and/or adjusting screw type of compression fitting nuts are not acceptable. Compression fittings shall be Mueller #110 series, Ridgid Pro Press or equal.

F. Commercial and multi-story buildings shall incorporate a Reduced Pressure Principle backflow device in the water service design. Additional requirements may be necessary upon review by the City's Project Inspector. The backflow device shall be installed immediately after the water meter or as instructed by the City's Project Inspector.

2.10 WATER SERVICE (THREE (3) INCHES AND LARGER)

A. Connections to existing mains shall be by the hot-tap method using tapping sleeves. Service piping shall be ductile iron; copper pipe may be used with prior approval of the Engineer. New service pipe and existing mainline pipe shall not be of similar size. A tee must be cut into the line and the work performed during a scheduled shut down. In some cases additional valves may be required and installation will be at the cost of the applicant.

B. Commercial buildings shall incorporate a Reduced Pressure Principle backflow device in the water service design. The backflow device shall be installed immediately after the water meter or as instructed by the City's Project Inspector.

2.11 FIRE SERVICE AND BACKFLOW DEVICE

A. Fire service shall include fittings, service tap, gate valve(s), valve box with extension, backflow device and protective cage, if required. Detector meter connection shall be plumbed for three quarter (3/4) inch size and adapted for a meter purchased through the City. Backflow device shall be epoxy coated in accordance with AWWA C550, "Protective Epoxy Interior Coatings for Valves and Hydrants". Meter trim shall be in copper or brass/bronze and meter set to dimensions for residential services.

B. Approved backflow devices for city owned projects only:

1. Wilkins Models 375 DA or 475 DA RPD or equivalent.

C. Commercial and multi-story (multi-family residential) buildings shall incorporate a Reduced Pressure Principle Detector Assembly type backflow device in the fire service design. The backflow device shall be installed immediately after the water meter or as instructed by the City's Project Inspector.

D. Fire systems are to be designed based on a public water main supply pressure not greater than sixty five (65) psi, regardless of static pressures found to be greater. In cases where a fire flow is performed and the static pressures are found to be lower than sixty five (65) psi then the lower pressure shall be used in the design of the fire system. DWWR, in consultation with the Fire Department, shall review designs not in keeping with this section.

2.12 COMBINATION AIR RELEASE VALVES

A. Combination air release valves with 1" iron pipe thread inlet.

1. Materials: Cast-iron body, epoxy coated, Buna-N set, and stainless steel float
2. Operating Pressure: Under one hundred fifty (150) psig, or as specified on the Plans
3. APCO #143C, Crispin #UL10 or ValMatic #201C, or equal

2.13 BOLTED (SLEEVE-TYPE) COUPLINGS

A. Couplings shall conform to AWWA C 219, "Bolted, Sleeve-Type Couplings for Plain-end Pipe," and to AWWA C 111, "Rubber-Gasket Joints for Ductile-Iron Pressure Pipe and Fittings"

B. Couplings shall be made of ductile iron conforming to ASTM A536. Gasket shall be of virgin compounded rubber. Couplings shall have low-alloy steel bolts with hexagonal nuts supplied by manufacturer.

C. Couplings shall be - Tyler/Union Ductile Iron C153 Full Body Mechanical Joint Solid Sleeve or equal and shall incorporate an approved restraint.

2.14 TAPPING SLEEVE

A. Tapping sleeve shall have a stainless steel body with a flat-faced flanged outlet recessed for a standard tapping valve, conforming to AWWA C 207, "Steel Pipe Flanges for Waterworks Service - Sizes four (4) inch through one hundred forty four (144) inch," Class D (150-175 psig). Drilling boltholes shall straddle the pipe centerline. For tap sizes, fourteen (14) inch and above, flange shall accommodate the valve requirements.

B. Sleeve shall have a 3/4" N.P.T. test plug, and a roll-resistant gasket resistant to oil, water and most hydrocarbon fluids.

C. Sleeve shall be with Type 304 stainless steel bolts and nuts.

D. Sleeves shall be Smith-Blair #663, Ford #FAST, Romac #SST or #FTS epoxy coated or equal.

2.15 FULL CIRCLE REPAIR CLAMPS

A. Repair clamps for repair and/or abandonment shall be full-circle type and have the following stainless-steel components: band, lugs, bridge-late, and manufacturers' standard high-strength, low-alloy steel nuts and bolts. The inner gasket shall be compounded rubber of all new materials and gridded for greater bonding to the main.

B. Clamps shall be:

Manufacturer	Model	Minimum Length	Size
Smith-Blair	#226	7-1/2"	Up to 2-1/2"
Smith-Blair	#227	7-1/2"	3" to 12"
Smith-Blair	#228	10"	16"
Ford	#F1	7-1/2"	Up to 2-1/2"
Ford	#F2	7-1/2"	4" to 12"
Ford	#F3	10"	14" to 16"
Romac	#CL1	7-1/2"	Up to 2-1/2"
Romac	#CL2	7-1/2"	4" to 14"
Romac	#CL3	10"	16"

2.16 VALVE STEM EXTENSIONS

A. Stem extensions shall be "Fiberplas" series #FPT200 with accessories as manufactured by Pipeline Products of San Marcos, CA. Minimum effective length of the three (3)-piece extension shall be eight (8) inches.

2.17 APPURTENANCES

A. Provide all necessary assembly bolts, washers and nuts, thrust blocks, supports, gaskets, flanges, and all other appurtenant items shown on the drawings, specified or required for the proper installation and operation of the piping, and devices included in or on the piping, equipment, and piping accessories.

2.18 SADDLES

A. Service saddles shall be cast bronze ASTM B 584, 85-5-5-5 with Buna-N gasket. The straps shall be flattened silicon and the nuts shall be silicon bronze. Saddles shall conform to applicable parts of AWWA C 800, "Underground Service Line Valves and Fittings," and for a working pressure of 200 psig.

B. Saddles shall be double-strapped (continuous U-bolt style) with FIPT outlet:

Smith-Blair	#323	(3" to 16")
Ford	#202B	(4" to 16")
Mueller	BR2B Series	(4" to 12")
Jones	#J-979	(3" to 16")
Romac	#202B	(2" to 12")

2.19 FLANGED COUPLING ADAPTOR

A. Underground installations: Adaptor shall be ductile iron with flange and mechanical joint ends.

B. Above ground installations: Body and follower shall be of ASTM A 536 ductile iron with standard compounded rubber gasket, grade 30, and O-ring, grade 60. Adaptor shall have manufacturers' standard steel bolts and nuts:

Smith-Blair	#912	(3" to 12")
Smith-Blair	#913	(14" to 16")
Smith-Blair	#916	(3" to 16") asbestos cement pipe
Romac	#FCA 501	(3" to 16")

2.20 ITEMS FURNISHED BY THE CITY

The following items will be furnished to the Contractor upon payment of the applicable fees to the City:

A. Water meters - all sizes

B. Water meter boxes for meters up to two (2) inch applications

C. Detector check water meters – three quarter (¾) inch

2.21 METER BOXES AND VAULTS

A. The following items will be furnished to the Contractor upon payment of the applicable fee for water meters(s) to the City.

Water Meter Size (in inches)	Meter Box Type	Drawing No.
3/4	Christy FL 9	W-01
3/4 to 1	Christy FL-30	W-02
1-1/2	Christy FL 36	W-03
2	Christy FL 36	W-03

B. Meter boxes for other meters and specialty valves shall be approved in advance by the Engineer and shall be furnished by the Contractor.

C. Vaults for large meters or specialty valves furnished by the Contractor shall be approved in advance by the City's Project Inspector.

2.22 SPECIALTY ITEMS

A. Specialty items such as, but not limited to, blow offs, pressure reducing valves, pressure relief valves, altitude valves, and automatically operated valves shall be approved in advance through the submittal process by the City's Project Inspector.

PART 3 – EXECUTION

3.01 TRENCH EXCAVATION AND BACKFILL

GENERAL

Trench excavation and backfill shall be in accordance with Section 02221, "Trench Excavation and Backfill", with the exception of the sieve sizes enumerated in 2.02 A, all other applicable City Standard Drawings and Specifications, and the provisions of these sub-sections.

3.02 TRENCH EXCAVATION

A. All pipe materials and accessories shall be on site prior to excavation. Unless otherwise specifically approved by the City's Project Inspector, the length of open trench shall not exceed one hundred (100) feet ahead of pipelaying and no more than twenty five (25) feet of excavated trench shall remain unbackfilled at end of day.

Excavations in public streets shall be coordinated so as to minimize traffic interference. Trenching in paved areas shall be saw cut or scored and broken ahead of trenching operations and shall be cut or trimmed to a neat edge after backfilling.

Any pavement damaged outside of the cut line shall be re-saw cut to include the damaged portion and restored prior to final paving.

B. Roots four inches (4") or greater found during excavation shall be exposed but not severed and shall be wrapped in burlap to protect them while exposed. Roots two to four inches (2"-4") in diameter that are severed in the course of construction shall be neatly trimmed and coated with a heavy coat of tree seal. In the event major roots of smaller trees are damaged or severed the engineer may require the contractor to consult with a qualified arborist to determine the proper method to protect the trees.

Trenches must be kept free from water while the pipe or structures are being installed, concrete is setting and until backfill has progressed to a sufficient height to anchor the work against possible flotation or leakage.

C. Trench Width

Trenches shall be excavated to the widths shown in plans with full depth vertical sides where possible.

D. Shoring

Shoring shall be removed only during backfill operations and shall be done without causing movement to the surrounding ground, piping or structure. Shoring can be left in place with the approval of the City's Project Inspector.

Excavated Material

Excavated materials suitable for use as backfill shall be placed at a minimum of three (3) feet away from the edge of trench to prevent trench collapse or materials spilling back into trench. A shoring plan shall be required in project submittals to the DWWR.

Excavated (native material) may only be used as subsequent backfill if it is free from organic material and does not contain rocks, concrete or asphalt, larger than two (2) inches. Use of excavated (native) material may only be approved if authorized by the City's Project Inspector.

Any excavated material found unsuitable by the City's Project Inspector for subsequent backfill or any excess material shall be properly disposed of and at the cost of the contractor.

3.03 TRENCH BACKFILL

A. Bedding

Bedding shall be specified and used for the construction of all water system pipelines.

There shall be no less than six (6) inches of bedding under any pipeline. Bedding material shall be worked under the sides of the pipe haunches to ensure side support. Bedding material shall extend to the haunches of the pipe (springline).

1. Water Main Pipe

   a. Ductile Iron Pipe

      Bedding and haunching shall be clean sand. Washed beach sand shall be tested and must have a ph of less the 6.5 and a resistivity of less than 2000 ohm-centimeters. Jetting may be required.

2. Recycled Water

   PVC and PE Pipe

   a. Less than twelve (12) inches

      Bedding and haunching shall conform to ASTM D448-7

Sieve Sizes	Percent Passing
3/4	100
1/2	90 – 100
3/8	40 - 70
No. 4	0 – 15
No. 8	0 – 5

   b. Less than thirty (30) inches

      Bedding and haunching shall conform to ASTM D448-6

Sieve Sizes	Percent Passing
1	100
¾	90 – 100
½	20 - 55
3/8	0 – 15
No.4	0 – 5

B. Cover on water mains shall not be less than thirty inches (30") nor greater than sixty inches (60"), unless on plans or if approved by the City's Project Inspector.

3.04 COMPACTION

Mechanical tampers, vibration or jetting may be used to achieve required compaction results. Jetting may be allowed only if, in the written opinion of a Contractor- hired Geotechnical Engineer, the backfill and surrounding ground material will not be over-saturated nor will its properties be compromised by the application of water. Jetting shall be allowed only in conjunction with mechanical compaction equipment to obtain the level of compaction required. When approved by a Geotechnical Engineer, jetting shall be performed as follows: Water is to be introduced into the backfill by means of at least a 1 inch jet pipe.

The pipe shall extend to within fifteen (15) inches of the top of the pipe.

The source of the water shall be a properly metered hydrant or water tank with a minimum pressure of not less than sixty (60) psi.

"Bridges" in backfill are to be completely broken down during the jetting process without flooding.

Jet points along the line shall be staggered from side to side and shall not exceed six (6) feet or as necessary to ensure the proper results.

Backfill is to be done in no more than two (2) foot lifts.

3.05 UTILITY AND WATER PIPE CLEARANCES

A. The minimum clear horizontal separation between water and sewer mains shall be ten feet (10'). Minimum vertical clearances shall be twelve inches (12") unless additional separation is required by the City. Where the stipulated clearances are unachievable, written approval from the State Health Department shall be required.

B. The minimum clear distances between the water pipe bell or flange and other utility pipes, ducts, and/or structures shall be as follows for water pipe 4" and greater:

1. A. Thirty inches (30") for adjacent or parallel utilities.

   B. Sixty inches (60") for high-risk utilities as defined in Section 00700, subsection 29h.

2. A. Twelve inches (12") for perpendicular or crossing utilities.

   B. Thirty inches (30") for high-risk utilities as defined in Section 00700, subsection 29h.

3.06 PIPE LAYING

A. Pipe delivery, handling and laying shall be in accordance with AWWA C 600, "Installation of Ductile-Iron Water Mains and Their Appurtenances."

B. The interior of the pipe shall be thoroughly cleaned of all foreign matter before being lowered into the trench and shall be kept clean during laying operations by plugging or by other approved methods. The full length of each section of pipe shall rest solidly upon the pipe bed with recesses excavated to accommodate the joints. Any pipe that has the grade or joint disturbed after laying shall be taken up and replaced. Before installation, the pipe shall be inspected for defects. Any defective pipe shall be set aside and marked.

C. Except where necessary in making connections with other lines, or as authorized by the Engineer, pipe shall be laid with the bells facing the direction of laying.

D. Poured-in-place concrete thrust block shall be provided at all fittings wherein a change of direction occurs, where a pipe dead ends, and at other places shown on the plans. The thrust blocks shall be poured between the fittings and firm undisturbed soil in the trench wall and shall be as shown on the applicable City Standard Drawings or as approved by the Engineer. Concrete shall be placed in a manner which will not prevent bolts and nuts from being removed or replaced.

E. Polyethylene encasement shall be in accordance with Method A of AWWA C 105, "Polyethylene Encasement for Ductile-Iron Piping for Water and Other Liquids".

F. New and existing fire hydrants not in service shall be wrapped or sacked with burlap to indicate their non-availability for service. Upon being placed in service, hydrants are to be flushed per NFPA 24.

3.07 WATER MAIN TAPPING

A. A certified distribution system operator must be present for all hydrostatic testing, chlorination, flushing, bacteria testing and connections to the existing system per California Department of Health Services, Operator Certification Regulations, Section 63770. The Engineer must receive the request for the certified Operators to be present for these operations in writing no less than six (6) working days prior to the anticipated date of work.

B. A water main shall be tapped using a full diameter pressure tap connector and only by persons having experience and skill in that type of work, and approved by the City's Project Inspector. Tapping shall be done only in the presence of DWWR and City Project Inspector.

C. The tapping tool to be used shall be one specifically designed for hot tapping potable water mains. Acceptable brands of tapping machines are Mueller, Romac and Reed. Improvised tapping machines shall not be allowed for use to tap potable water mains.

D. The minimum distance between the tap and the pipe bell coupling shall be eighteen inches (18"); and between services shall be twenty-four inches (24").

E. The minimum distance between a tap and adjacent taps shall be twenty-four inches (24").

F. Service taps on ductile-iron mains encased in polyethylene may be accomplished by making an X-shaped cut in the polyethylene and temporarily folding back the film or by tapping directly through the polyethylene. After the tap has been completed, cuts in the polyethylene and any other areas of damage to the film shall be repaired with tape as described in AWWA C 105, "Polyethylene Encasement for Ductile-Iron Piping for Water and Other Liquids." Service lines of dissimilar metals also shall be wrapped with polyethylene or a suitable dielectric tape for a minimum clear distance of three (3) feet. (0.9 m) away from the ductile-iron main.

G. All tools and materials used to perform the tapping operation shall be disinfected by a twelve and one half percent (12.5%) solution of sodium hypochlorite approved for use in potable water supply systems.

3.08 WATER SERVICE

A. There shall be a minimum one service per lot, and each unit on the lot shall have a separate water meter. The service shall be sized to accommodate domestic and fire flows. No service shall be located in a driveway.

B. Location of all water service laterals shall be permanently marked by imprinting or chiseling the letter "W" four inches (4") in height on top of the curb above the lateral.

C. The Engineer and the Contractor shall accurately document meter numbers with building addresses, and the Engineer shall forward these numbers to the Department of Water and Wastewater Resources (DWWR) office. Subsequently, DWWR will forward the meter numbers to the City's Utility Billing Office for their records.

D. Water meters shall be located in landscaped areas. DWWR will review other locations on a case by case basis

3.09 SERVICE REPLACEMENT

A. Contractor shall install new water services parallel to the existing ones that are to be replaced. Following the inspection, testing of the pipe, flushing, disinfection etc., as described in the specifications, the Contractor shall connect the new mains to the existing ones shown on the plans. After that, the old services may be

disconnected and the new copper service laterals shall be connected to the meters and the meter boxes. The service on the property side of the meter may need to be adjusted, if necessary, with the use of approved materials. New meters and meterboxes will be provided by the City. After all services in a street have been transferred to the new system, the old pipe shall be disconnected by closing the respective valves. The old pipe shall then be cut and abandoned. Contractor shall schedule with the Engineer a time to receive the meter boxes and lids. The Contractor shall set the new boxes in the location of the existing boxes and connect the new meter in place of the old meter. As part of this work, the Contractor shall be responsible for the proper setting and installation of both City furnished meter and meter box; and the Contractor shall install the connection from the "touch-read" meter to the box cover.

3.10 COMBINATION AIR RELEASE VALVES

A. Installation shall conform to Standard Drawing No. W-06.

3.11 HYDROSTATIC TESTING

A. General

1. A certified Distribution System Operator must be present for all hydrostatic testing, chlorination, flushing, bacteria testing and connections to the existing system per California Department of Health Services, Operator Certification Regulations, Section 63770. The Engineer must receive the request for the certified Operators to be present for these operations in writing no less than six (6)working days prior to the anticipated date of work.

2. The Contractor shall give a minimum of six (6) working days written notice to both the Engineer and the City Fire Department to schedule filling and testing of the pipeline. Testing shall conform to NFPA 24.

3. Hydrostatic pressure and leakage test procedure is composed of two parts with all points in the pipeline being tested shall be subjected to a minimum pressure of:

   a. Two hundred twenty-five pounds per square inch gauge (225 psig) for Pressure Class 350 ductile-iron pipe without services,

   - and -

   b. All services from the main to the curb stop shall be hydrostatically tested to one hundred seventy-five pounds per square inch gauge (175 psig),

B. Before Testing

1. The interior of the pipeline shall be thoroughly cleaned, and the trench backfill, except permanent pavement, shall be completed.

2. The concrete thrust or reaction blocks shall be cured for at least seven (7) calendar days.

3. Testing shall not be performed against closed valves.

C. Test Equipment Set-Up

1. Contractor shall furnish hoses, pumps, pressure gauges, leakage-measuring device, connections, relief valves, other necessary apparatus, and personnel required for making the tests.

2. The pressure gauge shall register pressure in pounds per square inch gauge (psig). The range of the gauge shall be from zero to three hundred pounds per square inch gauge (0-300 psig). The gauge face shall have a five (5) psig increment inscribed. The gauge shall have been calibrated within forty-five (45) calendar days of the hydrostatic test and the calibration tag shall be affixed to the gauge.

3. The gauge assembly shall be equipped with three-quarter inch (3/4") IPT nipple and isolation valve to allow the Engineer to install a second gauge.

4. The City may test pressure gauges for accuracy.

D. Filling the Pipeline

1. All air vents shall be open during the filling of the pipeline with water.

2. After a test section is completely filled and air vents closed, the pipeline shall be allowed to stand under pressure for a minimum of twenty-four (24) hours, to allow the lining to absorb water and permit the escape of air.

3. During this period, valves and exposed connections shall be examined for leaks, and all visible leakage shall be repaired.

E. Hydrostatic Pressure and Leakage Test

1. After filling the pipe, the filling apparatus shall be either disconnected or physically isolated from the pipeline.

2. Raise the pipeline pressure to the test pressure by means of a pump connected to the pipe in a manner satisfactory to the Engineer.

3. Maintain pressure within least ten (10) psig above the test pressure specified for thirty (30) minutes. Then reduce pressure to the test pressure.

4. Maintain test pressure within ten (10) psig of the test pressure specified for two (2) hours minimum. At the end of the test period, bring pressure back to the test pressure to determine total leakage.

5. An inspection for leaks along the pipeline shall be made by the Contractor while pipe is under pressure.

6. Any leaks found shall be recorded by the Contractor and the record provided to the City.

7. Use of sound level meter ("leak detector") and results will not relieve Contractor of responsibilities for furnishing a pipeline, which will pass the leakage test.

8. Measured leakage for the pipe is the total quantity of water required to be pumped into the pipeline to maintain the test pressure specified during the two-hour test and to bring pressure back to the test pressure less the measured leakage through the bulkheads and exposed connections.

9. For successful completion of the test, the measured leakage shall not exceed one-quarter (1/4) gallon per inch of diameter per one thousand feet (1,000') per two (2) hours.

F. Repairs and Retests

1. Repair all known leaks and retest the pipe until the hydrostatic pressure and leakage test is successfully completed.

2. Any damage to the protective lining and coating of the pipe and to the jointing material after the testing shall be repaired.

3. Repairs shall be made subject to the approval of the Engineer.

4. Excavate where required to locate and repair leaks or other defects that develop under the test.

   a. Remove backfill and paving already placed.

   b. After repairs, backfill and pave in same manner as initial work.

3.12 FLUSHING AND CHLORINATING

A. A certified Distribution System Operator must be present for all hydrostatic testing, chlorination, flushing, bacteria testing and connections to the existing system per

California Department of Health Services, Operator Certification Regulations, Section 63770. The Engineer must receive the request for the certified Operators to be present for these operations in writing no less than six (6) working days prior to the anticipated date of work.

B. Flushing and chlorinating shall be conducted only after the successful completion of the hydrostatic pressure and leakage test. Flushing from the City's water system shall only be performed by using an approved Reduced Pressure (RP) type backflow device with current certification.

C. Contractor shall:

1. Give a minimum of six (6) working days written notice to both the Engineer and the City Fire Department to schedule flushing and chlorinating operations. Schedule shall allow delivery of samples to the approved laboratory before 2:00 p.m., Monday through Friday, the same day samples are taken. All procedures shall conform to applicable requirements of NFPA 24.

2. Make necessary piping connections.

   a. Install chlorinating taps at locations designated by the Engineer.

   b. Install temporary blow-offs at locations designated by the Engineer.

   c. Temporary blow-offs shall permit adequate flushing of the main. The minimum size of blow-offs and minimum number of outlets shall be:

Main Diameter (in inches)	Blow-Off Diameter (in inches)	Outlets Required
2"	2"	1
4"	2"	1
6"	2"	1
8"	4"	2
12"	4"	3
16"	6"	4
20"	6"	8

   Use two and one-half inch (2-1/2") fire hose and dissipator on each outlet. Chlorine must be removed before water enters storm system.

   d. All sample taps shall be copper to FIP smooth bore.

   e. Remove temporary flushing assemblies when test results are satisfactory to the Engineer.

3. Flush and chlorinate the pipeline in accordance with AWWA C 651, "Disinfecting Water Mains." Chlorination shall be performed only by personnel certified to perform that operation.

a. Use Sodium Hypochlorite per Section 2.2 of AWWA C 651. Available chlorine shall be twelve and one-half percent (12-1/2%) to thirteen percent (13%) by volume. Chlorine tablets shall not be used. Chlorine shall be of the type approved for the purpose of disinfection of potable water supply systems. Chlorine for use in swimming pools shall not be allowed.

b. Use Continuous Feed Method of Section 5.2 of AWWA C 651, except the maximum allowable volume of water available for the preliminary flushing shall not exceed twice the volume of pipe to be flushed. Chlorine shall be fed through an approved flow regulated chlorine injection machine. The contractor shall, at the request of the City's Project Inspector, provide calculations showing the amount of chlorine introduced.

c. Document flushing and chlorination in a manner acceptable to the Engineer. Chlorine must be removed before water enters the storm system.

4. Connect to water source, convey to piping, and dispose of water during flushing without flooding, inundating or damaging any property, or harming the environment with the chlorinated water. Discharge shall be made by a hose into a sanitary sewer.

5. Provide personnel on the job at all time during flushing, chlorinating, and sampling.

6. Operate valves, under City direction, and provide other necessary assistance to the City.

D. Upon completion of disinfection, the flushed section of main shall remain isolated from the existing water system and allowed to sit undisturbed for a minimum of twenty-four (24) hours prior to sampling for bacteriological contamination.

E. Water samples shall be taken by a State-certified laboratory for bacterial examination. Such samples shall be taken, examined, and reported on by a recognized laboratory accustomed to this work. Examination shall be conducted according to the latest edition of "Standard Methods for the Examination of Water and Wastewater", American Public Health Association. Test results shall conform to the latest edition of U. S. Public Health Service Drinking Water Standards, and so attested by the examining laboratory prior to acceptance of the water line. Costs for the above tests shall be included in the contract bid prices.

F. The above tests shall apply to each unit or branch of the water main and all of its services up to the curb stops.

G. The bacteriologically treated unit or batch may be put into service only after written City approval of test results.

H. Neutralized disinfection water shall be disposed in the City's sanitary sewer system, provided forty-eight (48) hours prior written notice has been given to the Engineer. As required, the Contractor shall provide pumping facilities for this disposal.

3.13 CONSTRUCTION PROCEDURE, CONNECTIONS AND WATER SYSTEM SHUTDOWNS

A. A certified Distribution System Operator must be present for all hydrostatic testing, chlorination, flushing, bacteria testing and connections to the existing system per California Department of Health Services, Operator Certification Regulations, Section 63770. The Engineer must receive the request for the certified Operators to be present for these operations in writing no less than 6 working days prior to the anticipated date of work.

B. Construction involves expansion and/or modification of the existing water system with the minimum possible service interruption during construction.

C. Connections and utility changes must be programmed to provide the least possible interruption of service. Prior to any shutdown, all labor, materials, fittings, supports, equipment and tools needed for the scheduled work as well as emergency work shall be on the site.

D. The Contractor shall not cause any contamination of the existing water system.

E. Following testing and disinfection, the pipeline shall be connected to existing mains as indicated on the drawing. Each connection shall be made at a time and in a manner that will result in the least interruption of service.

F. The Contractor shall not operate any valve controlling the flow of water in the City's existing system.

G. All connections involving shutdown of City's existing facilities shall be done in the presence of the Engineer and the Certified Distribution System Operator. The Contractor shall complete the connection work without interruption.

H. Planned Shutdowns:

1. Shutdowns are subject to the following scheduling constraints:

   a. Shutdowns shall not be performed on a Monday, Friday nor on the first workday following a City holiday. (It is preferred that shutdowns also not be performed on the day preceding a City holiday, if possible.)

   b. Under special circumstances, and only upon approval by the city, shutdowns may be scheduled on a weekend or during non-working hours.

   c. No more than two shutdowns will be performed in any two consecutive workdays.

d. All shutdowns shall be scheduled to be performed between the hours of 9:00 a.m. and 3:00 p.m., inclusive, unless prior approval for deviation from these hours has been granted by DWWR. Shutdowns are scheduled for four (4) hour durations. Additional time may be granted on a case by case basis.

e. Prior to the start of any construction, Contractor shall submit a schedule of all planned shutdowns required for completion of project and shall indicate anticipated date, work to be performed, and estimated duration of work. In any case, the Fire Department will receive a minimum of 48 hours prior notice before a shut down.

2. The Engineer must receive the water shutdown request in writing from the Contractor at least six (6) working days prior to the anticipated date of the water shutdown. The Engineer shall forward the request together with the necessary paperwork to the DWWR for review and scheduling.

3. The City will review the request to ensure that the Contractor will have all materials available and complies with all provisions of the City's procedures, including the submission of required information and scheduling requirements.

4. Upon completion of the City's review of the shutdown request, the City will prepare the required number of door hanger notices and distribute the notices. Completed door hangers must be posted forty-eight (48) hours prior to scheduled shutdown in order to proceed.

5. All excavations required to make the connection must be completed and approved at least twelve (12) hours prior to the scheduled shutdown. The City will not perform the actual shutdown until the Contractor is on-site and ready to work. If the Contractor is not on-site and ready to proceed within sixty (60) minutes of the scheduled start, the shutdown will be canceled. The Contractor will be billed for the City's work on a time and materials basis.

6. If the shutdown is canceled or cannot be performed, the Contractor will notify the Engineer at least twenty-four (24) hours in advance of the requested shutdown date. If the new date of shutdown is known and the area remains the same, notice of new date can be given at this time followed by written confirmation by Contractor. Re-notification to the public must be performed by the City per Paragraph 4 above.

7. Upon completion and approval of the work, the Contractor shall notify the Engineer to reactivate the water system.

3.14 PAVEMENT REPLACEMENT

A. See Section 02500, "Paving and Surfacing," of these specifications.

3.15 VALVE BOXES

A. Valve boxes in the street shall be set in a poured concrete collar, at least nine inches (9") wide by six inches (6") deep. The top of the concrete shall be covered by one and one-half inches (1-1/2") of asphalt concrete.

B. Extension tubes are to be centered over the operating nut and brought to 6 inches of final grade.

C. Set boxes to grade within five (5) working days after paving of streets. Boxes are to be set flush with the road surface

D. Valve stem extensions shall be assembled and installed as per manufacturer's recommendation.

E. For valve boxes indicating horizontals alignment changes, the "arrow" on box shall be oriented to point in direction of flow.

F. All new and adjusted valve box covers for isolation of fire hydrants shall be primer-painted and coated with Dunn-Edwards "Safety Red #221" or matching permanent red paint.

G. Paving Around Valve Boxes

The City's Project Inspector shall be notified no less than ten (10) working days prior to the start of resurfacing roadways, parking lots or private streets. The City's Project Inspector shall determine whether any valve boxes and covers are in need of replacement. If any valve boxes and covers are determined to be in need of replacement by the DWWR, DWWR will supply a new box and cover. The contractor shall install the new box and cover per these specifications. This section shall apply to all types of asphalt overlay as well as grind and pave work.

3.16 ABANDONMENT OF EXISTING FACILITIES

A. Valve Boxes

1. Planted areas: Remove box and cover. Fill any hole or depression with similar type of dirt at the specific location.

2. Sidewalk areas: Remove box. Remove full flag of affected sidewalk. Pour concrete and finish to match that of the existing sidewalk.

3. Street areas (AC): Remove box. Neatly sawcut appropriate area that shall be determined by the engineer in the field. Restore subgrade, base and pavement according to City specifications.

B. Two-Inch (2") and Three-Inch (3") Steel Pipes as Local Feeders/Services

1. Remove old fittings, pipe, and saddle at main pipe or fitting.

2. Install specified full circle clamp coupling over former tap on pipe, or install new plugs in tapped tee or cross.

3. Restore street and/or sidewalk to its former condition or better.

C. Four-Inch (4") and Larger Connections

1. Remove tee from existing main and replace it with same diameter ductile-iron pipe, two feet longer than existing tee. Use specified restrained sleeve type couplings.

2. Removal may include an adjacent in-line valve, which the Contractor shall replace with a City-furnished valve.

3. Restore street and/or sidewalk to its former condition or better.

D. Fire Hydrants

1. Remove hydrant and bury. Plug remaining pipe with concrete.

2. Remove tee from existing main and replace it with same diameter ductile iron pipe, two-feet longer than existing tee. Use specified restrained sleeve type couplings, or approved equal.

3.17 REPAIR/RESTORATION OF PROPERTY

A. Any repair or restoration work resulting from Contractor's activity shall be completed within twenty-four (24) hours. Contractor may use the sod saved from the existing lawn or use new sod/seed to match existing lawn. Any concrete or other repair shall match existing. Contractor shall maintain the new planting for a minimum thirty (30) day period.

B. All new or relocated fire hydrants shall be provided with one new finish coat of paint prior to the Contractor making a request for "punch list" preparation by the City.

3.18 PIPE ABANDONMENT

A. Where an existing line is to be abandoned, pipe shall be cut and pipe ends shall be plugged with concrete. If portions of the line to be abandoned are depressurized only by the closure of a valve or valves then the line shall be capped with appropriate sized restrained MJ caps and a thrust block shall be poured.

3.19 AS-BUILT DRAWINGS

A. As-built drawings for all city projects shall be updated daily and shall be made available to the project inspector upon request. Location of all valves and other water system appurtenances, as specified by the City's Project Inspector, shall be verified by a licensed surveyor and shall be incorporated into the as-builts at the expense of the contractor. At the completion of the project, the as-built drawings shall be submitted to the Engineer together with an electronic copy of the as-builts in a form acceptable to the City of Daly City Public Works Department/Engineering Divison.

End of Section

SECTION 02720 - SANITARY SEWER COLLECTION SYSTEM

CONTENTS:

Part 1 – General 1

1.01 Work Included 1

1.02 Related Requirements 1

1.03 Reference Standards 2

1.04 Quality Assurance 4

1.05 Measurement and Payment 4

1.06 Submittals 5

Part 2 - Products 5

2.01 General 5

2.02 Ductile Iron Pipe 5

2.03 Poly-Vinyl Chloride (PVC) & High Density Polyethylene (HDPE) Pipe & Fittings 6

2.04 Vitrified Clay Pipe (VCP) 7

2.05 Traps/Interceptors/Separators 7

2.06 Manholes 8

2.07 Manhole Frames and Covers 9

2.08 Adjusting Rings for Manhole Frames and Covers 9

2.09 Anchor Bolts 9

2.10 Iron Castings 9

2.11 Sanitary Sewer Cleanouts 9

2.12 Backwater Valve 10

2.13 Recycled Water Valves and Valve Boxes 10

2.14 Backfill Materials 12

2.15 Minor Concrete 12

TABLE OF CONTENTS continued:

Part 3 – Execution 12

3.01 Trench Excavation 13

3.02 Initial Backfill 13

3.03 Compaction 14

3.04 Pipe Installation 14

3.05 Sewer Sliplining 15

3.06 Pipe Bursting 21

3.07 Utility and Water Pipe Clearances 23

3.08 Trench Backfill 23

3.09 Connections to Existing Manholes 28

3.10 Connections to Existing Pipe 28

3.11 Side Sewer Connections to Main Sewers 28

3.12 Manholes 29

3.13 Adjusting Existing Frames and Covers to Grade 30

3.14 Pumping Facilities 32

3.15 Reconstruction and Repair 37

3.16 Concrete Thrust Blocks 37

3.17 Laterals - Cleanouts 37

3.18 Cleaning Sanitary Sewers 37

3.19 Reconstruction of Existing Structures 38

3.20 Testing Sanitary Sewers 38

3.21 Closed Circuit Television Inspection of Sewer Lines 42

3.22 Sanitary Sewer Plugs.. 46

3.23 Abandonment of Sanitary Pipes and Manholes. 46

3.24 Repair/Restoration of Property. 48

3.25 Construction Procedures, Connections, and System Rerouting. 48

3.26 Bypass Pumping/Sewage Flow Control. 49

3.27 As-Built Drawings.... 51

SECTION 02720 - SANITARY SEWER COLLECTION SYSTEM

PART 1 – GENERAL

1.01 WORK INCLUDED

A. Furnish and install all piping as shown on the drawings, described in the specifications, and as required for a complete and operable system. The work includes abandoning and plugging of existing main sanitary sewers, construction of new service mains and laterals, construction of new manholes, appurtenances, demolition and backfilling of existing manholes, verification of rim and invert elevations, as built drawings, piping for recycled water, use of approved confined space equipment, trench shoring per OSHA requirements, and compliance with San Francisco Bay Area Sanitary Sewer Overflow Monitoring and Reporting Program requirements.

B. Any and all work to be performed on the Collection System shall be inspected by the City's Project Inspector. The City's Project Inspector shall obtain required approvals from DWWR representative for all submittals and inspections.

C. In addition, any and all work performed on the collection systems shall conform to the North San Mateo County Sanitation District code of requirements.

D. Stormwater Pollution Prevention Requirements - The contractor shall comply with the City's NPDES Stormwater Waste Discharge permit #CA0029921, as updated, for discharges to the storm drain system, including adherence to all applicable Best Management Practices to prevent pollutants, including sediment, from entering the storm drains.

The developer/contractor shall provide an adequate Stormwater Pollution Prevention Plan (SWPPP) for all applicable projects prior to commencing any phase of construction. The SWPPP shall comply with the current General Permit for Construction Activity from the California Regional Water Quality Control Board and/or current San Mateo Countywide Water Pollution Prevention Program permit.

1.02 RELATED REQUIREMENTS

A. Section 01340, *"Submittals"*

B. Section 02221, "Trench Excavation and Backfill"

C. Section 03300, "Minor Concrete"

1.03 REFERENCE STANDARDS

A. ASTM C 12 *"Standard Practice for Installing Vitrified Clay Pipe Lines"*

B. ASTM C 301 "Standard Test Methods for Vitrified Clay Pipe"

C. ASTM C 425 "Standard Specification for Compression Joints for Vitrified Clay Pipe and Fittings"

D. ASTM C 700 "Standard Specification for Vitrified Clay Pipe, Extra Strength, Standard Strength, and Perforated"

E. ASTM C 828 "Standard Test Method for Low Pressure Air Test of Vitrified Clay Pipe Lines"

F. ASTM C 896 "Standard Definitions of Terms Relating to Clay Products"

G. ASTM C 1091 "Standard Method for Hydrostatic Infiltration and Examination Testing of Vitrified Clay Pipe Lines"

H. ASTM C 900 All Standard Applicable for SDR35, SDR26, SDR21 AND ASTM C 900 Pipe and Fittings.

I. ASTM C 581 Standard Practice for Determining Chemical Resistance of Thermosetting Resins Used in Glass-Fiber-Reinforced Structures Intended for Liquid Service.

J. ASTM D 3212 "Standard Specification for Drain and Sewer Plastic Pipes Using Flexible Elastromeric Seals"

K. ASTM D 1784 "Standard Specification for Rigid PVC and CPVC Compound"

L. ASTM D 2321 "Standard Practice for Underground Installation of Thermoplastic Pipe for Sewers and other Gravity-Flow Application"

M. ASTM D 3034 "All Standards Applicable for SDR35, SDR26, SDR21 Pipe and Fittings"

N. ASTM D 3350 "Standard Specification for Polyethylene Plastic Pipe and Fitting"

O. ASTM D 3035 "Standard Specification for Polyethylene Plastic Pipe (SDR-PR). Based on controlled outside diameter."

P. ASTM D 2412 Standard Test Method for Determination of External Loading Characteristics on Plastic Pipe by Parallel Plate Loading.

Q. ASTM D 3262 Standard Specification for Fiberglass (Glass-Fiber-Reinforced Thermosetting Resin) Pipe and Fittings.

R.	ASTM D 3567	Standard Practice for Determining Dimensions of Fiberglass (Glass-Fiber-Reinforced Thermosetting Resin) Pipe and Fittings.
S.	ASTM D 3681	Standard Test Method for Chemical Resistance of Fiberglass (Glass-Fiber-Reinforced Thermosetting Resin) Pipe in a Deflected Condition.
T.	ASTM D 4161	Standard Specification for Fiberglass (Glass-Fiber-Reinforced Thermosetting Resin) Pipe Joints Using Flexible Elastomeric Seals.
U.	ASTM D 1784	Rigid Poly (Vinyl Chloride) (PVC) Compounds and Chlorinated Poly (Vinyl Chloride) (CPVC) Compounds.
V.	ASTM D 3034	Standard Specifications for Type PSM Poly (Vinyl Chloride) (PVC) Sewer Pipe and Fittings
W.	ASTM D 3212	Joints for Drain and Sewer Plastic Pipes Using Flexible Elastomeric Seals.
X.	ASTM D 2321	Standard Practice for Underground Installation of Flexible Thermoplastic Sewer Pipe
Y.	ASTM D 2657	Standard Practice for Heat-Joining Polyolefin Pipe and Fittings
Z.	ASTM D 3350	Standard Specification for Polyethylene (PE) Plastic Pipe and Fittings Materials
AA.	ASTM F 1803	Standard Specification for Poly (Vinyl Chloride) (PVC) Closed Profile Gravity Pipe and Fittings Based on Controlled Inside Diameter
BB.	ASTM F 679	"All Standards Applicable for SDR35, SDR26, SDR21 Pipe and Fittings"
CC.	ASTM F 477	"Standard Specification for Elastomeric Seals (Gaskets) for Joining Plastic Pipe"
DD.	ASTM F 714	"Standard Specification for Polyethylene Plastic Pipe (SDR-PR). Based on Outside Diameter"
EE.	ASTM F 477	Standard Specification for Elastomeric Seals (Gaskets) for Joining Plastic Pipe.
FF.	ASTM F585	Standard Practice for Insertion of Flexible Polyethylene Pipe into Existing Sewers
GG.	AWWA C950	Fiberglass Pressure Pipe.

1.04 QUALITY ASSURANCE

A. All materials and equipment furnished under this Section shall:

1. be of a manufacturer who has been regularly engaged in the design and manufacture of the materials and equipment for at least five (5) years; and

2. be approved by the City's Project Inspector before installation. The inspector shall verify that the quality is equal to the materials and equipment made by those manufacturers specifically named herein, if an alternate product manufacturer is proposed.

B. The Contractor's attention is directed to Article 8 of the City's General Conditions (Section 00700). To validate that specified final elevations have been provided, the Contractor shall provide to the City applicable grade certificates as required by Article 8. No separate payment will be made for providing such certification. All costs therefore shall be included in the various work item(s) requiring certification.

1.05 MEASUREMENT AND PAYMENT

A. The lengths of the various types and sizes of sewer pipes will be measured and paid for by the linear foot of horizontal length actually installed. Pipe lengths between manholes will be measured and paid only between interior faces of manholes.

B. Unless otherwise specified in the Special Provisions, no separate payment will be made for bends, wyes, tees and other fittings. All associated costs therefore shall be included in the unit price for pipe requiring the fitting.

C. Laterals will be determined and paid for as unit installed in place for the different sizes of laterals or as specified in the Special Provisions. Laterals designated for transfer from an existing sewer main to a new sewer main will be paid as units.

D. Manholes, including frames and covers, will be measured and paid for as unit price each. Existing manhole covers shall be salvaged and delivered to the City as directed by the City's Project Inspector unless specified to be reused in the project.

E. Potholing will be determined and paid for as unit price each, unless otherwise specified in the Bid Schedule.

F. The above prices and payments shall include full compensation for furnishing all labor, materials, tools, equipment, confined space equipment and use thereof, testing, inspections, including probing and locating other utilities, excavation, backfill, aggregate base, pavement restoration, sidewalk restoration, sheeting and shoring, ditching, diking, pumping, bailing, draining, furnishing and maintaining services and equipment for traffic safety and dewatering, and incidental work for properly and safely constructing, replacing, or upgrading sewers, complete in place and fully functional, as shown on the plans and as specified in these specifications.

1.06 SUBMITTALS

A. Shop Drawings: Submit data to show that the product conforms to the specification requirements.

B. Materials List: Submit a list of all materials proposed to be used on the project, showing manufacturer's name, product trade name, type, grade, and weight. Materials list shall be submitted and approved before any installation occurs.

C. Manufacturer's Warranty: Submit manufacturer's warranty on the product and a certificate showing compliance with applicable ASTM Standards.

PART 2 - PRODUCTS

2.01 GENERAL

A. Pipe sizes are nominal inside diameter unless otherwise noted.

B. All materials delivered to the job site shall be new, free from defects, and shall show manufacturer's name, trade name, type, grade, weights, and other identifying data.

C. Acceptance of materials shall be subject to strength and quality testing, in addition to inspection of the completed product. Acceptance of installed piping systems shall be based on inspection and testing as specified hereinafter.

D. The City's Project Inspector will review and approve before installation each pipe length, fittings, joints and materials to be used. Additionally, the inspector shall also verify that all needed equipment and reasonable spare parts are on site before allowing cuts or service disruptions in the existing system.

E. All pipe installed above or below ground that are designed to convey recycled water shall be the color purple or distinctively wrapped with purple tape.

2.02 DUCTILE IRON PIPE

A. Pipe and fittings shall be ceramic, epoxy lined, ductile iron pipe with elastomeric gaskets and fittings, "Protecto 401," as manufactured by US Pipe and Foundry, or equal. Elastomeric Gaskets shall be sewage and grease resistant.

2.03 POLY-VINYL CHLORIDE (PVC) & HIGH DENSITY POLYETHYLENE (HDPE) PIPE AND FITTINGS

A. All PVC pipe shall at a minimum conform to ASTM D 3034 or ASTM F 679. Rubber gaskets shall be factory installed and conform to ASTM F 477. Pipe joints shall conform to ASTM D 3212. Pipe shall be made of PVC plastic having a cell classification of 12454 or 12364 as defined in ASTM D 1784. Gravity pipe shall have an SDR of 35 or 26 and will be determined by the City's Project Inspector. Forced main pipe shall meet ASTM C 900, Class 150, DR 18.

B. All pipe, fittings, gaskets, joint lubricants and cements/solvents, shall be supplied by the manufacturer, or per manufacturer's specification

C. Joints shall all be push on, elastomeric gasket type and conform to ASTM F 477/D 3212.

D. Lateral connections to PVC mains shall be made using a saddle tee or saddle wye or City's Project Inspector approved equivalent and approved through the submittal process.

E. Pipe shall be installed in accordance with ASTM D 2321 and the manufacturer's specifications. Bedding material shall provide adequate and uniform support under the pipe.

F. HDPE pipe and fittings may be used only where recommended by DWWR. Specifications are to be determined per application. Repairs to HDPE must be done with electrofusion couplings.

G. All High Density Polyethylene (HDPE) pipes to be used on gravity sewers shall not be black or any dark color on the interior, or orange, red, magenta or blue in color on the exterior of the pipe. Pipe shall be SDR 11 or 17.

H. Repairs to PVC pipe – repairs to existing PVC pipe can be performed in the following manner:

1. Repairs of less than three (3) feet – Insert new section of PVC pipe and use the appropriate Mission MR series couplings or equivalent to make the connections.

2. Repairs of greater than three (3) feet – Insert new section of PVC pipe using a double push-on type coupler on one side and the appropriate Mission MR series coupling or equivalent on the other side of the repair.

2.04 VITRIFIED CLAY PIPE (VCP)

A. Pipe and Fittings

1. Vitrified clay pipe shall not be used for new main or lateral construction without prior approval from the City's Project Inspector.

   Vitrified clay pipe shall not be used to convey recycled water.

   Vitrified clay pipe and fittings shall meet all requirements of ASTM C 700, "Vitrified Clay Pipe, Extra Strength, Standard Strength and Perforated." Pipes shall be bell and spigot or plain ends.

B. Joints Gravity Mains and Laterals

1. VCP pipe joints shall be of a mechanical flexible compression type. Joints for bell and spigot pipe shall be made of plasticized polyvinyl chloride compound, bonded to the pipe, molded, and cured to uniform hardness to form a tight coupling when assembled. Pipe joints shall be speed-seal as manufactured by Gladding McBean, Pacific Clay Products, Mission Clay Products, or equal.

2. Joints for plain end VCP pipe shall be banded rubber couplings secured with stainless steel bands such as manufactured by Mission Clay Products, Gladding McBean, or equal, and conform to the requirements of ASTM C 425 "Compression Joints for Vitrified Clay Pipe and Fittings." . All couplings shall be Mission MR56 ARC couplings or equal. Stainless steel sheer bands are to be used on all couplings. Connections from cast iron, PVC or HDPE to VCP are to be of Mission MR02 ARC couplings or equal. Connection to SDR 35 PVC will require the proper solvent weld adaptor.

3. Deflection of pipe is to cause no more than 1/8 inch gap between pipe faces.

4. Repair banded couplings shall be with adjustable stainless steel shear ring for sizes six (6) inches through twenty seven (27) inches.

2.05 TRAPS/ INTERCEPTORS/SEPARATORS

When in the judgment of the North San Mateo County Sanitation District, waste pretreatment is required, an approved type of grease trap and/or grease interceptor and/or separator complying with the current provisions of the California Plumbing Code as adopted by the City of Daly City with emphasis on Section 1009.0, 1011.0,1012.0 and 1014.0 and Appendix H, is required. Grease interceptors for commercial kitchens shall use DWWR/NSMCSD Standard Drawing number SS-6A, Grease Interceptor Sizing Worksheet, for the proper sizing of the interceptor. The calculations along with the manufacturers engineered drawings shall be submitted for review and will be approved on a case by case basis. An effluent sampling box is required on all interceptors and separators.

2.06 MANHOLES

A. Pre-Cast Concrete Manholes

1. All pre-cast concrete manholes shall conform to the details shown on the applicable City Standard Drawings for sewer manhole. Pre-cast manhole sections shall be manufactured in accordance with ASTM C 478, "Precast Reinforced Concrete Manhole Sections." Sewer manholes shall be without rungs or steps. Manholes shall be leak free structures. Structures constructed with precast sections shall be so constructed using a single manufacturers products and /or with products as may be recommended by the precast section manufacturer.

2. Manhole Sizes:

Manhole Diameter	Clay Pipe Main Diameter	Cover Diameter
48 inches	21 inch and smaller	24 inches
60 inches	24 inch and 27 inch	36 inches
72 inches	30, 33 and 36 inch	36 inches

B. Manhole Bases

1. Precast manhole bases shall be installed unless otherwise noted on the plans. Precast bases shall be manufactured in accordance with the requirements of ASTM C478.

   Cast in place manhole bases may be used if approved by the DWWR prior to installation.

C. Work on Existing Manholes:

1. When work is performed on existing manholes, plywood shall be used to cover entire channel and a drop cloth shall be used to cover the entire base. This precaution shall be taken to prevent debris from entering the Collection System. Non-compliance will result in the suspension of that portion of the Contractor's work for the day until the precautionary measures are put in place. No contract time extensions will be granted due to said suspension of work. Repairs to brick manholes are to be made using bricks conforming to ASTM C 32 "Sewer and Manhole Brick," grade MS.

D. Joint Sealer

1. Joints in precast manhole sections shall be made of "Ram-Nek" preformed flexible plastic joint sealant.

2.07 MANHOLE FRAMES AND COVERS

A. Manhole frames and covers shall conform to applicable City Standard Drawings. Non-pressure type manhole frames and covers shall be D&L A-1000, or equal. Pressure type manhole frames and covers shall be D&L A-1000 (bolt down), or equal. Both manhole frames and covers shall meet all requirements of ASTM A 159, "Automotive Gray Iron Castings."

B. Manhole covers shall be labeled "Sanitary Sewer".

C. Manhole covers shall have at least one pick hole and one edge pry hole.

2.08 ADJUSTING RINGS FOR MANHOLE FRAMES AND COVERS

A. Shall not be used on any sewer manhole. Frames must be raised in accordance with Section 02720 - 3.13.

2.09 ANCHOR BOLTS

A. Anchor bolts shall be fabricated as specified by the equipment manufacturer and, unless otherwise indicated, shall be stainless steel. Cone shall be drilled to accept ¾ inch stainless steel inserts. Manhole rim is to be bolted down prior to the pouring of the concrete cap.

2.10 IRON CASTINGS

A. Iron castings shall be made from properly prepared patterns and molds and shall conform to ASTM A 48, "Gray Iron Castings," Class 40C. Small castings shall be galvanized. Large castings shall be galvanized only if specifically required.

2.11 SANITARY SEWER CLEANOUTS

A. Bends and Fittings

1. Bends and fittings for sanitary sewer cleanouts shall conform to the requirements of applicable City Standard Drawings. Cleanouts shall be installed as part of all lateral repairs or replacements.

B. Concrete Boxes and Covers

1. Concrete boxes and covers for cleanouts shall conform to applicable City Standard Drawings.

C. Riser Pipe

1. Cleanout risers shall be the same material that is being used for the lateral repair/replacement and shall extend to within six (6) inches of the underside of the cleanout lid.

2. Risers for cleanouts shall be continuous pipes (no joints) of the same material as the cleanout.

D. One-way directional cleanout

1. One-way directional cleanout shall be located two (2) feet minimum from the face of the building. Cleanout shall incorporate a cleanout body with threaded cap.

2.12 BACKWATER VALVE

A. Backwater valve shall be of the no-hub type, with bolted cover and furnished with a brass flap, and shall be of the Tyler #8270 Four (4) inch model or approved equal conforming to the California Plumbing Code.

B. Backwater valves are to be installed on all sewer laterals with less than 2% grade or when the lowest fixture in a building is lower than the rim of the next downstream manhole. Backwater valve shall be placed in an appropriately sized vault to allow for routine maintenance by the owner.

2.13 RECYCLED WATER VALVES AND VALVE BOXES

A. Valves

1. General

- All valves shall be non-rising stem (NRS), opening left (counter-clockwise), and the stem shall be fitted with a two-inch (2") square operating wrench nut. The operating nut shall be within eighteen inches (18") to twenty-four inches (24") below the final grade utilizing stem extensions, as required.

- All valves used must be properly coated and materials must be suitable for use in sewage applications.

- Valves in pump stations and other special facilities shall be equipped with hand wheels.

- Each valve shall have the maker's initials, pressure rating, and year of manufacture cast on the body. Furnish affidavit of compliance.

- Bolts, nuts and T-bolts for connecting valves to pipe shall be the same as for pipe and fittings.

- In addition to thrust blocks, all mechanical joint fittings shall be restrained with an approved joint restraint device, "Mega lug" by EBBA or approved equal, that has a pressure rating suitable for the thickness of pipe specified.

2. Control Valves:

   All valves for use in any part of the collection system must be submitted for approval to the City's Project Inspector prior to installation.

3. Check Valves:

   - Swing-type, gravity-operated check valves shall comply with the applicable parts of AWWA C 508, "Swing-Check Valves for Waterworks Service, two (2) through twenty four (24) inches NPS (National Pipe Straight Threads)". Check valves shall have bronze disc facing, iron body, bronze mounted, and O-ring sealed stuffing box. Valves two and one half (2-1/2) inches through twelve (12) inches shall be rated for one hundred seventy five (175) psig maximum working pressure, have flanged ends, and be installed only in a horizontal position.

   - Check valves shall be the following:

     1) Mueller #A-2600-6 — 2-1/2" to 16"

     2) Stockham #931 — 2" to 16"

     3) American-Darling #52SC — 2" to 16"

B. Valve Boxes

1. Each valve shall be equipped with a valve box, complete with cover. Boxes shall be extension type with a slide type adjustment. The word "RECYCLED WATER" shall be cast on the cover and the cover shall be cleaned, primer-painted and coated with Dunn Edwards #265 U permanent magenta paint.

   The boxes shall be adapted with full extension to the depth of cover required over the pipe at the valve location. Christy #G-5 traffic valve box shall be used in streets and sidewalks and #FL8 curb valve box with #FL8C "Concrete" lid shall be used in other locations.

2. Valve boxes for identification of horizontal alignment changes (bends) shall be ten and one quarter (10 ¼) inches inside diameter with triangular cover. The word "RECYCLED WATER" shall be cast on the cover. The cover shall be cleaned, primer-painted and coated with permanent magenta paint. The boxes shall be adapted with full extension to the depth required over the pipe at an elbow location. Boxes shall be Brooks Products, Inc. #4-TT Series or Christy Products, Inc. #G-4.

3. Sleeves or tubes for all valve and valve box identifications shall be eight (8) inch PVC, Schedule 40, and shall rise to six inches (6") below strut sidewalk or finish grade.

2.14 BACKFILL MATERIALS

Unless otherwise specified, trench backfill material shall be as provided under Section 02221 - "Trench Excavation and Backfill," of these specifications, applicable City Standard Drawings and the following:

A. Initial backfill material in ground saturated by water shall be granular material, clean and free of clay, silt or organic matter, and shall be Class 1, Type B, conforming to the requirements of Section 68-1.025, "Permeable Material," of the State Specifications.

B. The minimum depth of cover for any public sewer shall be three feet (3'). Sewer shall be encased in concrete, shall be of ductile iron pipe, or shall have a six-inch (6") concrete cap, as approved by the City's Project Inspector, should it be impossible to obtain the specified minimum cover.

2.15 MINOR CONCRETE

A. Concrete for minor structures such as cast-in-place manholes, manhole bases, pipe encasements, pipe supports, replacement and repair of curb and gutter, sidewalks, and other concrete work, when designated as minor concrete on the plans, shall conform to the provisions of Section 03300 - "Minor Concrete," of these specifications.

PART 3 – EXECUTION

TRENCH EXCAVATION AND BACKFILL

GENERAL

Trench excavation and backfill shall be in accordance with Section 02221 - "Trench Excavation and Backfill," of these specifications and applicable City Standard Drawings and Specifications, and the following:

Cover on sewer main shall not be less than thirty inches (30") or greater than sixty inches (60"), unless shown on the Plans or approved by the City's Project Inspector.

3.01 TRENCH EXCAVATION

A. All pipe materials and accessories shall be on site prior to excavation. Unless otherwise specifically approved by the City's Project Inspector, the length of open trench shall not exceed one hundred (100) feet ahead of pipe laying and no more than twenty five (25) feet of excavated trench shall remain unbackfilled at end of day.

   Excavations in public streets shall be coordinated so as to minimize traffic interference. Trenching in paved areas shall be saw cut or scored and broken ahead of trenching operations and shall be cut or trimmed to a neat edge after backfilling. Any pavement damaged outside of the cuts shall be saw cut and restored prior to final paving.

B. Roots four inches (4") or greater found during excavation shall be exposed but not severed and shall be wrapped in burlap to protect them while exposed. Roots two to four inches (2"-4") in diameter that are severed in the course of construction shall be neatly trimmed and coated with a heavy coat of tree seal. In the event major roots of smaller trees are damaged or severed, the City's Project Inspector may require the contractor to consult with a qualified arborist to determine the proper method to protect the trees.

   Trenches must be kept free from water while the pipe or structures are being installed, concrete is setting and until backfill has progressed to a sufficient height to anchor the work against possible flotation or leakage.

C. Trench Width

   Trenches shall be excavated to the widths shown in plans with full depth vertical sides where possible.

D. Shoring

   Shoring shall be removed only during backfill operations and shall be done without moving the surrounding ground, piping or structure. Shoring can be left in place with the approval of the City's Project Inspector.

3.02 INITIAL BACKFILL

A. Sanitary sewers shall be laid on a firm bed of material shaped and compacted as shown or noted on the plans and detail drawings or herein specified.

B. Bedding material shall be accurately shaped to the line and grade called for on the plans.

3.03 COMPACTION

Compaction shall be in accordance with Section 02221 - "Trench Excavation and Backfill," of these specifications.

3.04 PIPE INSTALLATION

A. Pipe and appurtenances shall be installed in accordance with the best practice, and in conformance with the applicable requirements of ASTM C 12 "Standard Practice for Installing Vitrified Clay Pipe Lines" and/or, ASTM D 2321" Standard Practice for Underground Installation of Flexible Thermoplastic Pipe for Sewers and Other Gravity-Flow Applications" and these specifications. Pipe laying shall start at the low end of each section and proceed upgrade. All bell and spigot pipes shall be laid with the bell end upgrade. Excavate bell holes for each pipe joint. All pipes shall be laid on a bed prepared by handwork, dug true to line and grade, to furnish a true and firm bearing for the pipe throughout its entire length. Adjustment of pipes to line and grade shall be made by scraping away or filling in and tamping material under the body of the pipe throughout its entire length, not by blocking or wedging.

B. For vitrified clay pipe with flexible compression joints, the mating surfaces shall be wiped clean of dirt and foreign matter, and an approved lubricant as recommended by the pipe manufacturer shall be applied to the joint surfaces. The spigot shall then be positioned inside the bell and the joint shoved home. For small diameter pipe, this operation may be done by hand, but on large diameter pipe, a lever attachment or a bar cushioned with a wooden block shall be used to shove the joint into place.

C. Mission MR Series ARC rubber-couplings or equivalent shall be used to make connections on plain end pipe in accordance with the manufacturer's instructions.

D. After each pipe had been brought to grade, aligned, and placed in final position, initial backfill is to be placed in accordance with section 02720 - 3.08 "Trench Backfill".

E. Vertical deflections in the pipe shall not exceed one quarter (¼) inch. If upon inspection vertical deflections/bellies/sags exceed the one quarter (¼) inch tolerance, the pipe shall be adjusted or replaced accordingly.

F. Mandatory use of shoring at designated locations shall not relieve the Contractor of the responsibility to install shoring at other locations required by the City's Project Inspector or where necessary for safety of workers or the general public.

G. Shoring shall be withdrawn only after backfill above pipe has proceeded to a height equal to or greater than three-quarters (3/4) of the excavation depth. Bottom cross bracing and wallers may be left in place upon removal of the sheathing. Backfill shall be brought to the level of the cross-braces before these are removed. Shoring shall be cut above the pipe and left in place only when so required on the plans.

H. The Contractor is solely responsible for installing and extracting the shoring in a manner that will not disturb the line, grade, backfill compaction, or operation of the utility being installed or adjacent utilities and facilities.

I. Ductile iron pipe and fittings shall be prepared, sealed and cut in accordance with the manufacturer's recommended procedures.

J. Place pipe that is to be bedded in concrete cradle or encased in concrete in proper position on temporary supports. When necessary, rigidly anchor or weight the pipe to prevent flotation as concrete is placed. Place concrete for cradles, arches or encasement uniformly on each side of the pipe and deposit at approximately its final position. Concrete placed beneath the pipe shall be sufficiently workable so that the entire space beneath the pipe can be filled without excessive vibration.

K. The minimum horizontal centerline to center line separation between sewer and water mains or laterals shall be ten feet zero inches (10'-0") to conform to sewer separation guidelines. Vertical clearances shall be as directed or shown on the project plans. In any case, a minimum clear space separation of twelve (12) inches shall be provided, with sewer line on lower level than water line.

L. At the end of each workday, all open ends of pipe installed shall be plugged to the satisfaction of the City's Project Inspector.

3.05 SEWER SLIPLINING

A. Intent

It is the intent of this portion of the Specification to provide for rehabilitating sewer lines via the installation of a fiberglass, high density polyethylene (HDPE) or polyvinyl chloride (PVC) sliplining pipe.

B. Scope of Work

Shall be per the design submittal and the contract documents.

C. Materials

1. Fiberglass pipe shall be centrifugally cast with glass fiber reinforcement in a cured thermosetting resin manufactured in accordance with ASTM D3262, cell classification Type 1, Liner 2, Grade 3. Pipe stiffness shall meet the design requirements in the following Section 4.2. Fiberglass liner shall be shown by tests to be resistant to long-term corrosion. Testing shall be performed in accordance with ASTM D3681 using 1.0N sulfuric acid for sanitary sewage, and ASTM C581 for industrial sewage.

2. PVC pipe shall have a minimum cell classification of 12364 B or C as defined in ASTM D1784. Pipe shall be closed profile. The joint shall be designed so that

neither the outside diameter of the pipe is increased, nor the internal diameter of the pipe is decreased at the joint. The joint shall meet the requirements of ASTM D3212. PVC liner pipe shall have a minimum pipe stiffness of 46 psi when tested in accordance with ASTM D2412.

3. Polyethylene pipe and fittings shall be manufactured from high density compounds in accordance with ASTM D3350. All HDPE pipe shall be closed profile and have a minimum SDR rating of 35 and a minimum pipe stiffness of 46 psi.

4. All pipe shall be provided with joints designed so that neither the outside diameter of the pipe is increased nor the internal diameter of the pipe is decreased at the joint.

5. Cellular concrete grout for annular space provided under this Specification shall have the following characteristics:

   a. 250 psi, 28-day compressive strength; 100 psi, 24-hour compressive strength, minimum.

   b. Foam concentrate: ASTM C869.

   c. Cement: ASTM C150.

   d. Fly ash: ASTM C618, Class F, except loss of ignition shall not exceed 5%.

   e. Water: Potable.

   f. Admixtures: Only as approved by foam concentrate manufacturer and the City's Project Inspector.

6. All connectors provided for reinstatement of laterals shall be as follows:

   a. All connectors shall be composed of synthetic rubber based compounds formulated to resist acids, alkalis, solvents, and greases encountered in sanitary and storm sewer and shall contain no reclaimed rubber. CONTRACTOR shall submit evidence of satisfactory testing in accordance with ASTM D543 with no weight loss in 1.0N sulfuric acid, 1.0N hydrochloric acid or 1.0N nitric acid. Materials shall show no etching, blistering, distortion or other evidence of chemical attack. Ultimate tensile strength shall exceed 750 psi at 80 degrees F and elongation shall exceed 150%. Water absorption shall not exceed 4% when tested in accordance with ASTM D570 and hardness shall not exceed 55 in a 5 second reading interval when tested in accordance with ASTM D2240, Type A Hardness.

   b. All compression bands shall be Series 316 Stainless Steel. All nuts and bolts shall be Series 305 Stainless Steel.

c. The completed joint shall comply with ASTM C425 for resilient sewer pipe joints.

D. Design Requirements

1. Conveyance Capacity

a. Sliplining pipe provided under this Specification shall provide the maximum conveyance capacity possible and in no case shall provide less capacity than currently exists. The actual pipe diameter installed may be less than the desired pipe diameter only if satisfactory documentation is submitted to the DWWR which demonstrates that it is impossible or impractical to construct the project with standard, commercially available pipe diameters and dimensions.

2. Design Criteria

a. Slipliner structural properties shall be calculated and provided to the City's Project Inspector prior to construction based upon the following:

i. All existing pipelines shall be considered (the City's Project Inspector shall specify state of deterioration of existing pipe, either fully deteriorated or partially deteriorated).

ii. Water table shall be located (the City's Project Inspector shall specify location of water table to establish hydrostatic pressure criteria).

iii. New pipe shall be assumed to have 5% ovality and be allowed 5% deflection at end of installation.

iv. Maximum depth to invert of existing pipeline shall be (the City's Project Inspector shall specify).

v. Safety factor of 2.0 for bending and wall crush, and 2.5 for buckling.

vi. Modulus of soil reaction shall be (the City's Project Inspector shall specify).

vii. Soil weight shall be (DWWR/Engineer shall specify).

E. Submittals

In addition to the requirements for submittals set forth in the construction contracts and the requirements for submittals contained in companion sections of these specifications, CONTRACTOR shall submit the following:

1. Manufacturer's literature for materials used in liner, gaskets and fittings.

2. Proposed grout mixture and pressures.

3. Test results and certification of compliance for materials.

4. Proposed plan for bypassing sewage during liner installation, if applicable.

5. Manufacturer's design analysis.

6. Proposed method of reconnecting service laterals, if applicable.

7. Details identifying proposed installation method, equipment, and location of access shaft, pit or approach tunnel.

F. Installation

1. Cleaning

   a. Prior to the installation of the slipliner pipe, CONTRACTOR shall thoroughly clean the sewer designated to receive the liner. Cleaning shall constitute removal of all debris, solids, roots, deposits, and other matter which would preclude the installation of the slipliner into the sewer line. Sewer cleaning requirements are contained in Section 02720 - 3.18 - Cleaning Sanitary Sewers.

2. Inspection of Pipelines

   a. Prior to the installation of slipliner, CONTRACTOR shall inspect the sewer designated to receive the liner. Sewer line inspection requirements are contained in Section 02720 - 3.21 - Closed Circuit Television Inspection of Sewer Lines.

3. Sewage Flow Control

   a. CONTRACTOR shall provide for maintenance of flow in the affected portions of the sewer system during installation of the slipliner. Requirements for sewage flow control and bypass pumping are contained in Section 02720 - 3.26 - Bypass Pumping/Sewage Flow Control.

4. Installation

   a. Unless otherwise specifically required, CONTRACTOR shall locate excavation(s) for insertion of slip liner to cause the least disruption to existing utilities, traffic and area business. The existing sewer line shall be exposed for the length necessary to accommodate the maximum length of liner pipe and for equipment. If CONTRACTOR locates insertion pit at an existing precast concrete manhole location, CONTRACTOR shall remove manhole frame, cover, cone, riser and manhole sections as necessary and store for reinstallation upon completion.

   b. Sections of liner shall be field connected above the insertion pit using low profile bell and spigot joints, butt-fused joints or jacking pipe sleeve joints. Bell and spigot and jacking pipe sleeve joints shall be equipped with an elastomeric gasket meeting the requirements of ASTM F477 to provide a watertight seal at each joint. Maximum allowable deflection shall be two degrees. CONTRACTOR shall take precautions to prevent ragged edges of broken sewer pipe from scoring slip liner as it is being pushed/ pulled into sewer.

   c. CONTRACTOR shall seal the annular space between the slip liner and the existing sewer pipe with cellular concrete as specified. CONTRACTOR shall take appropriate precautions to avoid over pressurization, buckling and floating of the slip liner pipe during the grouting process. CONTRACTOR shall comply with pipe manufacturer's recommendations for grouting procedures and with the grout manufacturer's procedures for placement of grout, grout pressures and grout quantity. Multiple grout lift installations may be required to avoid buckling of the liner pipe. CONTRACTOR shall also take precautions to avoid movement of the liner during the grouting operation. No grout shall be placed until service connections have been restored. Grout placement method and pressure shall be in accordance with manufacturer's recommendations and shall be submitted to the City's Project Inspector prior to the placement of grout.

5. Service Connections

   a. CONTRACTOR shall reconnect all service connections to the sewer unless the City's Project Inspector deems connection to be inactive or abandoned. CONTRACTOR shall machine core through liner at each connection point, and comply with the following connection procedures:

      i. CONTRACTOR shall excavate and install a tee fitting with saddle configured to the outside diameter of the slip liner and of tee length necessary to connect existing service or lateral. CONTRACTOR shall bond saddle to outside of liner pipe per manufacturer's recommendations. A minimum of 90% capacity restoration is required.

ii. To join pipes of dissimilar material, CONTRACTOR shall joint plain ends and connect the existing pipes and services using flexible pipe connectors equipped with stainless steel bands and fastening devices as specified.

6. Manholes

a. CONTRACTOR shall cut the upper half of liner out at manholes, and as required to accommodate lateral and service connections at manholes. CONTRACTOR shall reconstruct manhole benches to match new invert elevations

b. Where existing manhole locations have been used as access pit sites, CONTRACTOR shall reconstruct precast manholes using salvaged materials. If existing manhole materials are not suitable for salvage, CONTRACTOR shall reconstruct manhole utilizing cast-in-place or new precast concrete manhole elements. All construction shall comply with the companion sections of these specifications

G. Testing and Acceptance

1. CONTRACTOR shall employ an independent testing agency to conduct and report compressive strength testing of the grout utilized in the construction. CONTRACTOR shall prepare and submit for testing four cellular concrete cylinders from each day's grouting activities. Testing shall occur at one (1) and twenty eight (28) days. All test results shall be submitted to DWWR/ Engineering.

2. After all work is completed, CONTRACTOR shall provide the City with a videotape or DVD showing both the pre- and post-installation conditions including the restored connections. Televising shall be accomplished in accordance with SECTION 02720 - 3.21 - Closed Circuit Television Inspection of Sewer Lines.

3. All defects discovered during the post-installation television inspection shall be corrected by the CONTRACTOR at his expense before the work under the Contract will be considered for Substantial Completion. After the defects, if any, are corrected, the affected sewer segment(s) shall be video taped again. The post-installation television inspection tape shall be submitted to the City's Project Inspector in sufficient time to allow the City's Project Inspector to review the videotape prior to the Substantial Completion milestone.

H. Measurement and Payment

1. Payment shall include all bypass pumping, cleaning, pre- and post-construction televising, labor, equipment, material, supervision, sheeting, shoring, bracing, installation, manhole reconstruction at access pit locations, safety, dust/erosion control, testing, site restoration and all other work specified or not which is

reasonably required to provide a completed installation. Any item not specified shall be considered incidental to the work. CONTRACTOR shall include all incidental cost in the unit price for the slip liner.

2. CONTRACTOR shall receive payment for building sewer lateral reinstatement on a unit price basis per lateral connection diameter reinstated in accordance with the unit prices contained in the contract documents.

3. CONTRACTOR shall receive payment for Mobilization/Demobilization and Traffic Control on a lump sum basis in accordance with the prices contained in the contract documents.

3.06 PIPE BURSTING

Pipe bursting for sewer main rehabilitation/replacement shall be reviewed by the DWWR on a case by case basis.

Pipe bursting may be used for lateral rehabilitation/replacement and shall conform to the latest editions of the UPC (IAPMO IS 26-2003) and the following requirements.

A. General

1. The Contractor shall be certified by the particular pipe-bursting system manufacturer and personnel shall be certified as fusion technicians by a manufacturer of HDPE pipe. Certifications shall be submitted with the lateral application.

2. The Contractor shall perform a pre-construction Closed Circuit Television (CCTV) inspection to evaluate the condition of the existing pipe and determine whether the pipe-bursting method is a valid alternative for repair. Inspection video shall be made available to the DWWR upon request.

B. Materials

1. Only HDPE and butt fusion joints shall be used for pipe bursting applications.

C. Construction

1. General

a. At a minimum, the Contractor shall adhere to the following requirements during construction:

i. Defects and Obstructions

- Contractor shall perform all necessary point repairs and remove all obstructions when pre-construction CCTV inspection reveal heavy solids, offset joints, sags in the pipe, or collapsed pipe that will prevent the completion of the pipe bursting process.

- If preconstruction CCTV inspection reveals a sag in the lateral that is greater than one quarter (1/4) of an inch, Contractor shall excavate and replace those sections of pipe to result in acceptable grade without the sag.

ii. Utility Location and Required Clearances

- A minimum of one foot of clearance (vertical or horizontal) from the outside edge of the pipe to the outside edge of the utility pipe, wire or structure is required. Contractor shall confirm this clearance exists based on above-ground evidence including utility location marks or as-built drawings. Clearances shall also conform to Section 02720 - 3.07 - Utility and Water Pipe Clearances.

- Due to the hazards associated with pipe-bursting near natural gas lines, all natural gas lines, including but not limited to distribution mains, transmission mains, and service lines, marked within four (4) feet of the existing lateral shall be uncovered (pot-holed) to confirm the required clearance exists. If the existing gas line is installed parallel and within four (4) feet horizontally to the existing lateral, the gas line shall be uncovered a minimum of once every one hundred (20) feet along the length of the lateral.

iii. Pipe Relaxation

- After the pipe has been installed, allow pipe manufacturer's recommended amount of time, but not less than four (4) hours, for cooling and relaxation due to tensile stressing prior to reconnecting to the lateral or sewer.

iv. Reconnections to Existing Laterals

- Connections to existing laterals shall be made with a watertight non-shear coupling per Section 02720 - 3.11.

v. Bedding and Backfill Requirements

- Bedding and backfill for all point repairs or connections to the existing lateral shall be per Section 02720 - 3.08.

vi. Post-Construction CCTV Inspection

- Contractor shall perform a post-construction Closed Circuit TV (CCTV) inspection to verify the repair was successful and acceptable. Contractor shall repair any sections of pipe that do not meet the requirements of this Section. The inspection video shall be made available to the DWWR upon request.

3.07 UTILITY AND WATER PIPE CLEARANCES

A. The minimum horizontal clear distance between water and sewer mains shall be ten feet (10'). Minimum vertical clearances shall be 12" unless additional separation is required by the City. Where the stipulated clearances are not achievable, written approval from the State Health Department shall be required.

B. The minimum clear distances between the sewer pipe bell or flange and other utility pipes, ducts, and/or structures shall be as follows for sewer pipe four inches (4") and greater:

1. a. Thirty inches (30") for adjacent or parallel utilities.

   b. Sixty inches (60") for high-risk utilities as defined in Section 00700, subsection 29h.

2. a. Twelve inches (12") for perpendicular or crossing utilities.

   b. Thirty inches (30") for high-risk utilities as defined in Section 00700, subsection 29h.

3.08 TRENCH BACKFILL

A. Bedding

Unless otherwise specified bedding material shall be used in the construction of all sewer system pipelines.

1. Manholes

Twelve (12) inches of Type 1 aggregate base shall be placed under precast manhole bases and shall be compacted to a relative compaction of Ninety (90) percent per ASTM D1557-78 and ASTM D2922-81

2. Pipelines

There shall be no less than six (6) inches of bedding material under any pipeline. Haunching material shall be worked under the sides of the pipe to ensure proper compaction and side support. Haunching shall extend to the spring line of the pipe.

a. VCP

i. Less than fifteen (15) inch

Bedding and haunching shall conform to ASTM D448 –67

Sieve Sizes	Percent Passing
1	100
¾	90 – 100
½	-
3/8	20 – 55
No.4	0 – 15
No.8	0 – 5

ii. Fifteen (15) inch to thirty (30) inch

Bedding and haunching shall conform to ASTM D448-57

Sieve Sizes	Percent Passing
1 ½	100
1	95-100
¾	-
½	25 -60
3/8	20 – 55
No.4	0 – 10
No.8	0 – 5

b. Ductile Iron Pipe

Bedding and haunching shall be clean sand. Washed beach sand shall be tested and must have a PH of 7.0 and a resistivity of less than 2000 ohm-centimeters. Jetting may be required.

c. PVC and PE Pipe

i. Less than twelve (12) inches

Bedding and haunching shall conform to ASTM D448-7

Sieve Sizes	Percent Passing
¾	100
½	90 – 100
3/8	40 - 70
No.4	0 – 15
No.8	0 – 5

ii. Less than thirty (30) inches

Bedding and haunching shall conform to ASTM D448 –6

Sieve Sizes	Percent Passing
1	100
¾	90 – 100
½	20 - 55
3/8	0 – 15
No.4	0 – 5

B. Initial Backfill

1. Initial backfill

Initial backfill shall conform to ASTM D448-57

Sieve Sizes	Percent Passing
1 ½	100
1	95-100
¾	-
½	25 -60
3/8	20 – 55
No.4	0 – 10
No.8	0 – 5

C. Subsequent Backfill

1. Subsequent backfill shall be suitable native material as directed by the City's Project Inspector or Class II Aggregate Base.

2. Subsequent backfill must be compacted to ninety five (95) percent in paved areas and:

   a. filled to within six (6) inches of final grade and capped with six (6) inched of A/C or

   b. filled to within eight (8) inches of final grade with six (6) inches of Class II A/B and two (2) inches of A/C or

   c. filled to within eight (8) inches of final grade with a six (6) inch, five (5) sack, concrete cap and two (2) inches of A/C.

3. Subsequent backfill must be compacted to ninety (90) percent in unpaved areas and filled to within six (6) inches of final grade and topped off with six (6) inches of topsoil.

D. Compaction

1. Mechanical tampers, vibration or jetting may be used to achieve required compaction results. Jetting may only be used only if, in the written opinion of a Geotechnical Engineer, the backfill and surrounding ground will not soften or be damaged by the applied water. Jetting shall be used with mechanical compaction equipment to obtain the level of compaction required.

   Jetting may be used as follows and under the supervision of a Geotechnical Engineer:

a. Water is to be introduced into the backfill by means of at least a one (1) inch jet pipe.

b. The jet pipe shall extend to within fifteen (15) inches of the top of the pipe.

c. The source of the water shall be a properly metered hydrant or water tank with a minimum pressure of not less than sixty (60) psi.

d. "Bridges" in backfill are to be completely broken down during the jetting process without flooding.

e. Jet points along the line shall be staggered from side to side and shall not exceed six (6) feet or as necessary to ensure the proper results.

f. Backfill is to be done in no more than two (2) foot lifts

2. For trenches in paved areas, compaction of trench backfill from initial fill to subgrade shall be ninety five (95) percent.

3. Aggregate base shall be compacted to ninety five (95) percent.

4. Trench work within State Highway rights of way requires a specific permit to be obtained by CalTrans. Unless otherwise noted on the permit, all backfill shall be as stated above.

5. Trench backfill in private roads, parking lots, or sidewalks shall be as stated above.

6. For trenches in unpaved areas, compaction of trench backfill from initial fill shall be eighty five (85) percent.

7. All initial fill material shall be placed in two (2) stages as follows:

   a. From the bedding under the pipe to the top of the pipe.

   b. From the top of the pipe at least twelve (12) inches above the pipe

   Each stage shall be compacted mechanically or by hand to a minimum of ninety (90) percent.

8. Relative compaction tests are required on a project by project basis. Tests shall conform to ASTM D 1557-78 and ASTM 2922-81 unless otherwise specified by the City's Project Inspector.

   Test results shall show:

   a. Percent relative compaction

b. Optimum moisture content in percent

c. Maximum dry density in pounds per cubic foot

Tests shall be taken at locations designated by the City's Project Inspector.

3.09 CONNECTIONS TO EXISTING MANHOLES

A. Pipe connections to existing manholes shall be done under the direction of the City's Project Inspector and other applicable requirements specified for new manholes, including all necessary concrete work, cutting, and shaping of channel.

B. All PVC pipe entering or leaving a manhole shall have a rubber sealing gasket as supplied by the pipe manufacturer, firmly seated perpendicular to the pipe axis, around the pipe exterior and cast into the structure base or near the wall center as a water stop. Water stop may also consist of a manhole coupling with rubber sealing rings cast into the structure base.

C. Existing flow shall be maintained through a bypass. A bypass plan shall be submitted and the contractor shall be solely responsible for maintaining the bypass and shall be liable for any fines levied by any agency as a result of any spill or overflow.

3.10 CONNECTIONS TO EXISTING PIPE

A. The Contractor shall provide fittings or adapters required to connect new pipe to existing pipe. Detail drawings of such fittings or adapters and the method of connection shall be submitted to the City's Project Inspector for approval.

B. Pipelines shall be connected to existing mains as indicated on the drawing. Each connection shall be made at a time and in a manner that will result in the least interruption of service. Refer to Paragraph 3.26 of this Section for additional requirements.

3.11 SIDE SEWER CONNECTIONS TO MAIN SEWERS

A. Side sewer and lateral size shall be four inches (4") for single-family units and six inches (6") minimum for commercial or industrial buildings and multiple family units.

Six inch and larger connections to main sewers are to be made at a manhole. In some circumstances, a new manhole may need to be installed at the applicant's expense and with the required permits.

B. Connections to existing PVC, HDPE and vitrified clay pipe main sewer shall be made by the methods shown on applicable City Standard Drawings:

1. Core a neat trim opening in the upper portion of the main sewer and install a special drilled fitting (i.e., "Tap-Tite") to complete the side sewer connection.

2. Core a neat trim opening in the upper portion of the main sewer and install a PVC saddle tee or wye using the stainless steel straps and gasket provided by the manufacturer.

C. Connection to ductile pipe mains shall be made using a Romac style "CB" sewer saddle or an approved equal.

3.12 MANHOLES

A. Manhole Bases

1. Cast in place manholes shall be used only upon prior approval by the DWWR. Cast in place manhole bases shall be poured against a minimum of twelve (12) inches of three quarter (¾) inch drain rock, over undisturbed material, and excavated to the dimensions shown on the plans. The Contractor shall not deviate from plan dimensions, notwithstanding over-excavation or other detrimental field conditions, unless approved by the City's Project Inspector. A forming ring shall be used to form a level joint groove in fresh concrete of the manhole base to receive the precast barrel section of the manhole. The metal forming ring shall be removed after the concrete has sufficiently set to eliminate any slump in the joint groove.

   Manhole Channels: Where sewer lines ingress and egress manholes, construction shall conform to the City Standard Drawings. Pipe shall be used to form the channel. After the base concrete has set, the channel shall be shaped to the final required configuration. Perpendicular channel sides shall not be allowed. All channels shall be approved by the City's Project Inspector.

2. Precast bases shall be used whenever possible. Precast bases shall be manufactured in accordance with the requirements of ASTM C478. Precast manhole bases shall have a smooth flow line with a uniform slope from inlet to outlet. Precast bases shall have a shelf conforming to the requirements of City Standard Drawings. A 6 inch (6") layer of type 1 aggregate base shall be placed on native, undisturbed material and under precast manhole bases and shall be compacted to 90 percent relative compaction per ASTM/D 1557-78 and ASTM D 2922-81. Precast manhole bases shall be installed as an integral part of the pipe laying operation.

   Work on Existing Manholes: when work is to be performed above the flow channel of existing manholes, plywood shall be used to cover the entire channel

and a drop cloth shall be used to cover the entire base and prevent any debris from entering the flow-channel. Noncompliance will result in the suspension of that portion of the Contractor's work for the day until the precautionary measures are put in place. No contract time extensions will be granted due to said suspension of work. This precaution shall be taken to prevent debris from entering or obstructing the flow to the Collection System.

B. Sanitary sewer connections to existing manholes shall be core-drilled and made using a flexible rubber seal/waterstop.

Saw cutting and hammer through taps are prohibited.

All connections shall provide for a watertight seal between the pipe and the manhole. The connector shall be the sole element relied upon to assure a flexible water tight seal of the pipe to the manhole.

When connecting new pipe to existing manholes, a channel and bench walls shall be installed.

The pipe up to the structures shall not project beyond the inside wall of the structure and in no case shall the socket of a vitrified clay pipe be built into the wall of a structure.

Flexible connection at manhole tie-in shall be in accordance with applicable City Standard Drawings.

C. Joints in pre-cast manhole sections shall be filled using "Ram-Nek" in the joint space between matching parts. After placement of the subsequent section, excess sealant squeezed from joint shall be removed and the joint area troweled smooth. Special precautions shall be taken to ensure that the entire joint space is filled with sealant.

D. Concrete for reinforced manholes and bases shall be mixed, placed and cured in accordance with Section 03300 - "Minor Concrete," of these specifications.

3.13 ADJUSTING EXISTING FRAMES AND COVERS TO GRADE

A. General

Before any work is performed on existing manholes, plywood shall be used to cover entire channel and a drop cloth be used to cover the entire base. This precaution shall be taken to prevent debris from entering the Collection System.

Existing frames, covers, or adjustment rings removed during adjustments may be reinstalled only if the materials are undamaged and only if approved in advance by the City's Project Inspector.

All City manholes shall be raised to grade within ten (10) calendar days after street resurfacing.

Manholes shall be raised flush with the finished grade of the new road surface. The maximum allowable tolerance shall be ¼ inch measured with a straightedge between any two points located 5' on opposite side from the center of the manhole.

B. Upward Adjustments

All final grade adjustment of manhole covers and frame assemblies shall be completed utilizing injection molded high density polyethylene (HDPE) adjustment rings as manufactured by **LADTECH, Inc.** or an approved equal.

- The adjustment rings shall be manufactured from polyethylene plastic as identified in ASTM Designation D-1248 (Standard Specification for Polyethylene Plastic Molding and Extrusion Materials).
- Material properties shall be tested and qualified for usage per the ASTM Test Methods referenced in the above ASTM standard.
- The adjustment rings shall be molded from 100% recycled material.
- The plastic rings shall be manufactured utilizing the injection molding process as defined by SPE (Society of Plastic Engineers).
- The adjustment rings shall be tested to assure compliance with impact and loading requirements per the ASSHTO Standard Specification for Highway Bridges.
- Installation shall be per manufacturer's recommendations only.
- The annular space between the rings and cone basin, the rings, and the rings and cover frame shall be sealed utilizing an approved butyl sealant. The approved sealant shall be applied as required for the product to be accepted.
- All adjustment for matching road grade shall be made utilizing a molded and indexed slope ring.
- Mortar shall not be applied to the adjustment rings. Sealant, as approved by the manufacturer, is the only material to be used between the rings, between the rings, between the cone and rings and between rings and frame and cover.
- All grade rings shall be covered by the **LADTECH, Inc.** warranty or one of equal terms and duration.

C. Downward Adjustments

Downward adjustments can be made by removal of grade rings, mortar, concrete or brick. At no time shall the cone be modified in any way.

D. Manhole Surface Block

Manhole surface blocks (collars) are required on all manholes. A block is to be poured around each adjusted frame. The block is to be eighteen (18) inches wide as measured from the outside edge of the cover and twelve (12) inches thick. Concrete is to be poured **no more than two (2) inches** from final grade and rough finished to accept asphalt overlay. Frame is then to grouted to grade to grade rings and cone.

In the event no block is found during adjustment, the contractor performing the adjustment shall provide and install a manhole surface block as described above at no additional charge.

E. Paving Around Manholes

DWWR/ Engineering shall be notified no less than ten (10) working days prior to the start of any work that has the potential to impact public infrastructure and shall include and not be limited to resurfacing of roadways, parking lots or private streets. The City shall determine whether any City infrastructure such as a manhole frame and cover or utility box, is impacted. If any City infrastructure is found to be in need of replacement during review, the city will supply the new manhole frame and cover or utility box. The contractor shall install the new infrastructure per the appropriate section of these specifications and it shall be installed at no cost to the City. If requested by the City, the contractor shall return the old infrastructure to the City corporation yard. This section shall apply to all types of asphalt overlay.

3.14 PUMPING FACILITIES

A. Sewer Lift Stations

New lift stations for the conveyance of sewage by multiple dwellings in new developments will be reviewed and approved on a case by case basis. All materials shall be consistent and compatible with stations currently in use by the City.

B. Private Pump Stations

1. Introduction

a. This Section describes, in general terms, the guidelines and requirements for the planning, design, and submittal requirements for low pressure sewer systems.

2. General

   a. Private pumping systems will only be considered in areas where sanitary sewers currently serve the surrounding areas and where conventional sanitary sewer facilities cannot be constructed.

3. Required Permits

   a. Approval of private pumping systems will be evaluated on a case-by-case basis and will only be allowed with prior written approval from the Department.

   b. At the discretion of the City, a lift station may be required in lieu of a private pumping system.

      i. When submitting for an Approval and Construction Permit, the following are required:

         - Written approval from the Department;
         - Private pump system justification – Per Section 501.03;
         - 50-year life cycle analysis; and
         - Gravity sewer alternative cost estimate.
         - Private pumping system calculations – Per manufacturer's recommendations and at a minimum the following:
            - Calculation worksheet – Per manufacturer;
            - Individual pump curves; and
            - Make and model number of pumps.
         - Standard Private Pump System Detail Sheet;
         - Identification of the person/entity responsible for the maintenance of the pumps and other components of the system that are not the responsibility of the City;
         - Homeowners Association Covenants and Restrictions, if applicable; and
         - Any other information Engineering, DWWR and/or the Building Department deems relevant to review and evaluate the proposed low-pressure system.

4. Responsibility

   a. The City will only be responsible for the operation and maintenance of the city main.

b. The homeowner shall be responsible for all piping, pumping equipment, and appurtenances between the building and the city main.

c. For private pumping systems, the City is NOT responsible for assuring new or replacement equipment is compatible with the existing equipment in the system.

5. System Design and Layout

a. Due to the variability of each site, the design of private pumping systems shall rely on sound engineering judgment and manufacturer's recommendations.

b. The City may, if reasonably justified, make any requirement deemed necessary to assure the system performs as intended.

c. The minimum requirements for the design and layout of private pumping systems shall be per the most recent version of the Standard Detail Sheets, the manufacturers' recommendations, and as follows:

i. Pipe Size

- Pipe size shall be per pump manufacturer's recommendations with a minimum size of two (2) inches for the common force main and one and one-quarter (1- 1/2) inches between the grinder pump and the common force main. The City's Project Inspector shall assure adequate cleansing velocities in the common force main.

ii. Overall System Design/Layout

- The design shall be as follows:
- Sufficient to achieve a cleansing velocity of two (2) feet per second in the common force main; and
- Without any "loops" or parallel pumping segments in the system.

iii. Cleanouts

- Cleanouts shall be per pump manufacturers recommendations but at a minimum the following locations:
  - At the terminal end of each common force main;
  - When two (2) or more force mains are connected; and
  - Every 50 feet.

iv. Flushing Stations

- Flushing stations shall be incorporated into the system.

v. Air Relief Valves

- Air relief valves shall be installed at the following locations:
  - All high points in the system

vi. Backflow Assembly Installation

- A backflow assembly shall be installed on each service line.

vii. Other requirements as deemed necessary.

d. Maximum Connections to Grinder Pump

i. Units

- No more than one (1) building will be permitted to connect to a Grinder Pump Unit. Common Grinder Pumps for one (1) building with multiple residential units are also prohibited, except for the following:
- Apartment buildings (only one apartment building per grinder pump unit); and
- Condominiums where different floors have different owners (only one building per grinder pump unit).

The intent is to have individual residential units be served by individual Grinder Pump Units.

e. Commercial Facilities

i. Commercial facilities will be handled on a case-by-case basis.

f. Grinder Pump Types

i. To assure all the Grinder Pump Units are compatible, all units shall be the same Make, Model Number, and have the same pump performance characteristics, unless justified.

ii. Replacement units shall be the same make and model as was originally approved by the Division.

iii. Pump specifications and pump replacement requirements shall be part of the Homeowners Association (HOA) Covenants and Restrictions if a HOA is planned.

iv. The type of pumps and allowable applications are as follows:

- Positive Displacement Pumps
  - May be used in all low pressure system applications.
- Semi-Positive Displacement Pumps
  - May be used in all low pressure system applications.
- Centrifugal Pumps
  - May only be used if the number of units is ten (10) or less and the Total Dynamic Head is less than forty (40) feet.
  - The design engineer and manufacturer are responsible for assuring the system will operate as intended.

g. Grinder Pump

i. Equipment

- Simplex or duplex grinder pumps may be used for single dwelling units. For uses other than single dwelling units, the City's Project Inspector shall determine which is appropriate.

  General equipment requirements are as follows:

  a. Grinder Pump Station

     i. The grinder pump stations shall be a complete package consisting of all equipment and appurtenances required for a fully operable pumping system.

     ii. Pump level controls, starter, alarm, piping, fittings, valves, and all accessories shall be part of a factory fabricated package so that after burying the wet well, the field connection of the gravity lateral, discharge line and electrical service line to the control box will complete the installation.

  b. Manufacturer

     i. Each grinder pump station shall be manufactured and assembled by a single manufacturer.

  c. Pumps

     i. The pumps shall be capable of macerating all material in normal domestic and commercial sewage, including reasonable amounts of foreign objects such a wood, plastic, glass, rubber, disposable diapers and the like to a fine slurry that will pass freely through the pump and one and one-quarter (1-1/4) inch discharge pipe.

  d. Electrical Motor and Level Controls

     i. Electrical and level controls shall be provided by the pump manufacturer. All controls shall be mounted so they can be cleaned or replaced without disturbing the pump or piping.

  e. Control Panels

     i. The control panels and all associated components on each standard unit shall be U.L. Approved and installed per manufacturer's recommendations. All equipment associated with each unit shall meet the current requirements of all applicable Federal, State, and Local electrical codes.

     ii. The design engineer and manufacturer are responsible for assuring the equipment is designed properly and will operate in a safe manner.

3.15 RECONSTRUCTION AND REPAIR

A. Reconstruction of damaged curbs and gutters, sidewalks, driveways, handicapped ramps, and median curbs shall be in accordance with Section 03300 - "Minor Concrete," of these Specifications.

3.16 CONCRETE THRUST BLOCKS

A. Concrete thrust blocks shall be provided on all force main bends having a deflection angle of eleven degrees (11°) or more. Thrust blocks shall have a sufficient bearing area to withstand the maximum force to be exerted. Concrete for thrust blocks shall conform to Section 03300 - "Minor Concrete," of these Specifications. Thrust blocks shall not be hand mixed.

B. Thrust blocks shall conform to details shown on applicable City Standard Drawings.

3.17 LATERALS - CLEANOUTS

A. Unless otherwise noted on the plans, all sanitary sewer laterals shall terminate in a cleanout constructed to the form and dimensions shown and detailed on applicable City Standard Drawings. As a minimum, one one-way cleanout adjacent to building shall be provided. When the distance from this cleanout to main exceeds fifty (50) feet or there is a change of lateral direction, an additional one-way cleanout shall be provided in consultation with the City and prior to installation. All clean outs shall be within the applicant's property. At no time shall cleanouts in the City's right of way be allowed.

B. Location of all laterals shall be permanently marked by imprinting or carefully chiseling the letter "S" four inches (4") in height on the top of the curb above the lateral.

3.18 CLEANING SANITARY SEWERS

A. Contractor shall flush and clean all sewer mains by means of pneumatic, sewer cleaning balls or porcupine. The balls or porcupine shall be of the appropriate size to fit the sewer pipe being cleaned. Hydroflushing or water jet cleaning, or "sewer balling" or "porcupining" operations shall be conducted by experienced personnel. The ball shall be introduced at the uppermost manhole and passed from manhole to manhole by means of a line with sufficient head of water to carry the ball along.

The movement of the ball shall be controlled by a rope. Care shall be exercised not to feed the ball too rapidly to enable removal of all debris from each manhole. A vacuum/flushing truck shall be used for all hydro-flushing operations.

B. Each section of the sewer line shall be thoroughly cleaned before proceeding to the next section. Where sewer balls will not pass flexible sewer rods or jet flusher may be used to clear the obstruction. Where obstructions cannot be cleared by sewer rodding, the obstructions shall be removed by excavation at the Contractor's expense. The Contractor shall remove all debris from the sewer lines by installing screens at all downstream manholes, or by using other methods acceptable to the City's Project Inspector.

C. The City's Project Inspector shall be present for all cleaning operations. The Contractor shall provide written notice to the City's Project Inspector Twenty four (24) hours prior to any cleaning operations.

D. Contractor shall use recycled water for sanitary sewer flushing and cleaning operations.

3.19 RECONSTRUCTION OF EXISTING STRUCTURES

A. General: The contractor, when removing existing structures located on live systems, shall take precautions to ensure that no foreign material enters into the existing sewer lines. Care shall be taken and proper methods employed to prevent dirt, rock, concrete, brick, wood, etc., from entering into the live lines.

During the period of time in which the contractor is working on a live sewer system, DWWR maintenance crews shall have continuous access to the structure. All work on the structure shall be complete within 3 days after the original structure is removed.

B. Structure Adjustments and Repair: When work is performed on existing manholes, plywood shall be used to cover entire channel and a drop cloth be used to cover the entire base. This precaution shall be taken to prevent debris from entering the Collection System. This precaution shall remain in place during all work and when complete be removed containing all debris.

C. Reuse of Material: Existing precast material, adjustment rings, frames and covers removed in adjustments and/or repairs may be reinstalled only when such undamaged items are permitted by the City Project Inspector.

3.20 TESTING SANITARY SEWERS

A. Sanitary sewer systems, including laterals and sanitary sewers, shall be tested for tightness, alignment, cleanliness, and compliance with these Standards after completion of all backfilling and prior to request for final inspection. Contractor shall notify the City's Project Inspector at least five (5) working days in advance of

proposed testing dates. Tests of gravity sewers shall be made from end of pipe or manhole to manhole unless grades are flat enough to permit testing of two or more sections at one time. All testing shall be performed under the presence of the City's Project Inspector. No payment will be made nor will any permit be signed off without the successful completion of all phases of testing.

B. The Contractor shall take all necessary precautions to prevent any joint from drawing ground water while the pipeline and its appurtenances are being tested. Contractor shall, at own expense, correct any excess leakage and repair any damage to the pipe, structures, and appurtenances resulting from or caused by this test. Where the actual leakage exceeds the allowable leakage, the Contractor shall discover the cause and remedy it before the test is accepted. If the leakage is less than that allowed and leaks are observed, such leaks shall be repaired at the City's Project Inspector's direction.

1. Main Sewers: Main sewers shall be tested after they have been inspected and cleared of obstructions and following backfill, but prior to repaving. Each section of sewer shall be tested between successive manholes by closing the lower end of the sewer to be tested and the inlet sewer of the upper manhole with stoppers.

2. At the Contractor's option, either the hydrostatic or the air test may be used. The City's Project Inspector shall require video inspection be performed on newly constructed sewer mains and laterals. If scheduling permits the City shall supply all video personnel and equipment. Video inspection services shall be requested at least five (5) working days in advance. If DWWR video inspection services are not available at the time of the request then the contractor shall supply the personnel and equipment and perform the work. The Contractor shall pay for all associated testing costs.

3. In the event that any portion of the new sewer main or lateral are found to be deficient during any phase of the testing, repairs shall be made within a reasonable time frame and in conformance with these specifications. All repairs shall be retested and shall be re-televised at the contractor's expense.

   a. Hydrostatic Test:

      i. Fill the pipe and manhole with water to a point four feet (4') below the ground surface of the upper manhole, but in no case less than four feet (4') above the pipe invert. If ground water is present, the water surface in the upper manhole shall be at least four feet (4') above the level of the ground water. The line shall be filled at least one (1) hour prior to testing and shall be tested at least two (2) hours, maintaining the head specified above with measured additions of water. The sum of these additions shall be the leakage for the test period.

ii. The maximum allowable head of water above any portion of sewer being tested shall be fifteen feet (15'). Where the difference in elevation between successive manholes exceeds fifteen feet (15'), a test tee shall be installed between manholes, and testing shall be carried on between the tee and the manhole. Test tee shall conform to applicable City Standard Drawings.

iii. The allowable leakage shall not exceed one-tenth gallon (0.1) per minute per inch diameter per one thousand feet (1,000') of main line sewer being tested for a two (2) hour duration test.

b. Mandrel Testing of PVC Sewer Main:

i. The contractor shall pull a mandrel through each segment of installed PVC sewer main to test the amount of deflection incurred during installation. This test shall be done after the pipe trench has been backfilled and compacted to the level of the pavement subgrade in paved areas or to the ground surface in unpaved areas. The City's Project Inspector shall observe mandrel testing. The contractor shall give at least five (5) working days notice to the City's Project Inspector before commencing mandrel testing.

ii. Mandrels shall be full circle, solid or rigid odd numbered (nine leg minimum) steel cylinders with pulling rings at each end and approved by the City's Project Inspector. The circular cross section of the mandrel shall have a diameter no smaller than ninety (95) percent of the average inside diameter of the pipeline being tested. The length of the mandrel shall be no less than two times the full cross section diameter. A separate pull line shall be attached to each pull ring to facilitate removal of the mandrel if an obstruction is encountered.

iii. Mandrels shall be pulled through the pipeline by hand without the aid of mechanical pulling devices. Any deficiencies found by mandrel testing shall be corrected by the Contractor, at the Contractor's expense. Deficiencies shall be repaired by excavating the pipe at least to the pipe spring line. Pipe bedding and backfill shall be re-compacted after the repair. Internal rounding or vibration to correct deflection shall not be permitted. After repair and re-compaction of the pipe bedding and trench backfill material, the pipe shall be retested using the mandrel. Any pipe failing two mandrel tests shall be replaced.

iv. PVC Sewer Deflection Standards:

Pipe Size (inches	Mandrel O.D. (inches)
6	5.619
8	7.524
10	9.405
12	11.191
15	13.849
18	16.924
21	19.952
Over 21	Follow Manufacturers Spec.

c. Air Test:

Air test shall be applied to each length between adjacent manholes, and the procedure shall be as follows:

i. Pressurize the test section to approximately four (4.0) psig. After this pressure is reached, allow pressure to stabilize. The pressure will normally drop as the air temperature stabilizes. This will usually take two (2) to five (5) minutes, depending on the pipe size. The pressure should be reduced to three and five-tenths (3.5) psig before starting the test. Start the test when the pressure is at three and five-tenths (3.5 psig). If the pressure drops below two and five-tenths (2.5) psig in less than the time given in the following table, the section of pipe shall not have passed the test:

Size	Minimum Time per 100 ft. Test Section
4"	1min. 53 sec.
6"	2 min. 50 sec.
8"	3 min. 47 sec.
10"	4 min. 43 sec.
12"	5 min. 40 sec.
15"	7 min. 05 sec.
18"	8 min. 30 sec.
21"	9 min. 55 sec.
24"	11 min. 20 sec.
27"	12 min. 45 sec.

ii. When the prevailing groundwater is above the line being tested, air pressure shall be increased forty-three hundredths (0.43) psig for each foot the water table is above the invert of the line.

iii. The pressure gauge used shall be supplied by the Contractor, shall have minimum divisions of one-tenth pound per square inch gauge (0.10 psig), and shall have an accuracy at least of four-hundredths of a pound per square inch gauge (0.04 psig). The gauge shall have been calibrated within forty-five (45) calendar days of the air test and the calibration tag shall be affixed to the gauge.

iv. The gauge assembly shall be equipped with three-quarter inch (3/4") IPT nipple and isolation valve to allow the City's Project Inspector to install a second gauge.

v. The City may test pressure gauges for accuracy.

d. Video Inspection

All sewer main repairs and new sewer main installations shall be televised in conformance with Section 02720 - 3.21 - Closed Circuit Television Inspection of Sewer Lines. All televising shall be performed at the contractor's expense. No sags greater than one quarter (0.25) inches shall be allowed.

3.21 CLOSED CIRCUIT TELEVISION INSPECTION OF SEWER LINES

A. Intent

1. It is the intent of this Specification to provide for the inspection of pipelines utilizing closed-circuit television techniques to identify the location and extent of sewer line defects to allow for a determination of rehabilitation needs, to document pre-rehabilitation line condition, and/or to document post-rehabilitation line condition and/or new construction.

B. Scope of Work

1. Prior to performing closed circuit television inspection activities, CONTRACTOR shall thoroughly clean the sewer line(s) designated to be televised. Sewer cleaning requirements are contained in Section 02720 - 3.18 - Cleaning Sanitary Sewers.

C. Safety

1. CONTRACTOR shall be solely responsible for safety during the performance of all work. CONTRACTOR shall not enter into any sewer segment where hazardous conditions may exist until such time as the source of those conditions is identified and eliminated by CONTRACTOR

and/or the DWWR. CONTRACTOR shall perform all work in accordance with the latest OSHA confined space entry regulations. CONTRACTOR shall coordinate his work with the City's Project Inspector. The City's Project Inspector presence shall be requested at least five (5) working days in advance.

2. CONTRACTOR shall be responsible for any damage to public or private property resulting from his/her televising activities and shall repair or otherwise make whole such damage at no cost to the City.

D. Equipment

1. Television inspection equipment shall have an accurate footage counter that displays on a remote monitor the exact distance of the camera from the centerline of the starting manhole. The camera shall be of the remotely operated pan and tilt type. The rotating camera and lighthead configuration shall provide 240 degrees of pan and tilt angle measuring centerline to centerline and 70 degree lens viewing angle.

2. The camera shall be color and shall provide a minimum of 460 lines of horizontal resolution and 400 lines of vertical resolution. The image pick-up device shall contain in excess of 379,000 picture elements (pixels). Geometrical distortion of the image shall not exceed one percent.

3. The color camera shall be equipped with the necessary circuitry to allow for the remote adjustment of the optical focus and iris from the power control unit at the viewing station.

E. Execution

1. Inspection of pipelines shall be performed by experienced personnel trained in locating breaks, obstacles, and service connections by closed-circuit television inspection techniques. The interior of the pipeline shall be carefully inspected to determine the location and extent of all pipeline defects. The location of any conditions which may result in a limitation of rehabilitation techniques that could be used and/or prevent proper installation of designated rehabilitation materials in the pipelines shall be noted so that these conditions can be considered and, if necessary, corrected prior to actual rehabilitation.

2. CONTRACTOR shall internally inspect, via closed circuit television inspection, the sewer segments as required. Generally, inspection shall be completed one sewer line section at a time. Access for televising purposes shall only be via existing manholes. Should access to particular sewer section be difficult and adjacent sections require television inspection, CONTRACTOR may be allowed to complete inspection in multiple sewer line sections. When multiple sewer line sections are inspected using one setup, CONTRACTOR shall zero the camera's footage metering device at

each subsequent sewer manhole to establish uniform starting location of Station 0+00 for each line section televised.

3. At all defects and service connections, the camera shall be stopped and the pan and tilt features shall be used to obtain a clear picture. Where possible, the camera shall be panned to view up each lateral or point of connection.

4. CONTRACTOR shall record these inspections on extra-high quality one-half inch VHS color videotape or DVD and on a suitable log. Tapes shall be recorded at SP speed. Videotape or DVD shall include a visual and audio narrative noting:

   a. Date, time of day, and depth of flow;

   b. Sewer segment number. Segment numbers shall be designated by OWNER.

   c. Upstream manhole number.

   d. Downstream manhole number.

   e. Type of sewer (e.g. sanitary, storm, combined)

   f. Size of sewer

   g. Sewer materials of construction

   h. Closest street address and street name on which sewer is located

   i. Beginning and ending tape counter numbers for each run (manhole to next manhole) of sewer inspected

   j. Direction of movement of camera, heading, and direction of flow

   k. Locations of service connections into sewer by clock position and with counter distance in feet from beginning manhole's centerline

   l. Location (start and end counter distances in feet from the beginning manhole's centerline) and description of obstructions, structural defects, missing pieces of pipe, longitudinal and/or circumferential cracking, joint deterioration including open and/or offset joints, ovality, leakage or evidence thereof, corrosion, erosion, break-in connections, protruding connections, mineral deposits, roots, previous repairs, grease/fats/oil deposits on pipe walls, sags, and other abnormalities with respect to the sewer's condition with counter distance in feet from the beginning manhole's centerline.

5. Contractor's Log

   a. The contractor's log shall contain the same information as above.

6. Videotape shall visually display at a minimum the date, pipe segment number (manhole number) and distance from the centerline of the upstream manhole. The distance between manholes shall be verified by

measuring tape. If the counter distance and the taping distance differ by more than 2 feet per 100 feet, the run shall be re-televised by CONTRACTOR at no additional cost to OWNER.

7. Videotape shall be maintained and delivered in a case, which shall display the project name, project number, date of inspection, manhole segment number(s) inspected, and crew ID number. The entire length of any one sewer segment shall be on one tape. No segment shall be split between two tapes. A tape may have multiple segments, so long as an entire section is on one tape. Original videotapes of all sections will be provided to the City's Project Inspector along with the respective television inspection field logs.

8. If during television operation television camera will not pass safely through entire sewer line section being investigated, CONTRACTOR shall, at no additional cost to OWNER, set up equipment so that inspection can be performed from opposite (downstream) manhole. Where an obstruction is encountered and a reverse set up is required, the distance shall be entered into the log and verbally noted on the VHS video from which manhole the measurements are being made. If under the reverse set-up the camera again fails to pass through the entire sewer line section, inspection shall be considered complete. All obstructions in the sewer segment that prohibit passage of the television camera shall be immediately reported to the City's Project Inspector by CONTRACTOR referencing location and nature of the obstruction. No rehabilitation work shall proceed until CONTRACTOR receives direction from OWNER regarding removal of the obstruction.

9. Should CONTRACTOR's televising equipment become lodged in any sewer line, it shall be removed by CONTRACTOR at his expense. This shall include, if necessary, excavation and repair of the sewer, underground utility repairs, backfilling and surface restoration. CONTRACTOR shall re-televise any line segment in which his equipment became lodged after said equipment has been removed to demonstrate to the OWNER that no damage exists as a result of his televising operations.

F. Bypass Pumping/Flow Control

1. Should bypass pumping or other form of sewage flow control be required by/of CONTRACTOR to facilitate sewer line televising, CONTRACTOR shall be solely responsible for providing all labor, equipment and materials necessary to control the flow of sewage in and/or around sewer segment(s) being televised. Requirements for sewage flow control and bypass pumping are contained in Section 02720 - 3.26 - Bypass Pumping/Sewage Flow Control.

G. Acceptance

1. CONTRACTOR shall present on videotape a continuous image in complete conformance with these Specifications of not less than ninety percent (90%) of the internal pipe surface at all times, including sags in sewer lines. The video tape shall be accompanied by a complete log. Maximum acceptable speed of camera through sewer shall be thirty (30) feet per minute. Lighting system shall be adequate for quality color picture at least five (5) feet in front of the camera's lens. CONTRACTOR shall re-clean and televise any segment for which video tape does not present a clear image of at least 90% of the internal pipe surface at all times, and/or is accompanied by an incomplete log.

H. Measurement and Payment

1. Payment for closed-circuit television inspection work which is not required as part of a construction contract for sewer line rehabilitation shall be made on an actual televised lineal footage basis per diameter of sewer televised and shall include the cost of all items necessary to complete the closed-circuit television inspection including any bypass pumping/flow control which may be required.

2. No direct payment shall be made for closed-circuit television inspection services required as part of a construction contract for sewer line rehabilitation. Payment for television inspection shall be included in the contract bid prices for the related sewer rehabilitation items.

3. Payment for closed-circuit television inspection work which is part of a new development to be accepted by the City shall be the responsibility of the developer and shall include the cost of all items necessary to complete the closed-circuit television inspection including any bypass pumping/flow control which may be required.

3.22 SANITARY SEWER PLUGS

A. All ends of sanitary sewers provided for future connection shall be plugged with "Polycap" stopper providing the same joint characteristics as specified for the sanitary sewer main or lateral.

3.23 ABANDONMENT OF SANITARY PIPES AND MANHOLES

A. Sanitary Sewer Facilities shall be abandoned as follows:

1. Combined Sewers, Sanitary Sewers, and Force Mains Combined

a. Sewers, sanitary sewers, or force mains to be abandoned shall be plugged with mortar and an eight (8) inch thick concrete brick wall. The facility being abandoned shall be filled with sand or concrete slurry and plugged, unless an

alternate plan is approved by the DWWR. Service shall be maintained within sanitary and combined sewers until the DWWR orders the bulkheads placed. No timber bulkheads shall be allowed.

2. Laterals

   a. Numerous existing buildings use common or shared laterals. The Contractor shall determine if the lateral is common/shared prior to abandonment. The requirements to abandon laterals are as follows:

      i. If the lateral serves one building and is NOT part of a common/shared lateral:

         - The downstream end of the lateral shall be sealed with a manufactured watertight cap/stopper made specifically for the purpose of sealing/capping the end of a sanitary sewer. The cap/stopper shall be installed per manufacturer's recommendation and in such a way to prevent any source of water from entering the sanitary sewer system. Any device or material that may slide into the lateral and potentially cause a blockage or obstruction in the mainline sewer will not be allowed. The cap/stopper shall be installed on a defect free portion of the lateral immediately before the wye connection to the city main. If defects are found in the wye connection, the Contractor shall excavate toward the main and the wye shall be removed and replaced with a new portion of equally sized pipe.

         - The remaining portion of the lateral from the point of termination to structure shall be sealed at both ends sealed with a manufactured watertight cap/stopper made specifically for the purpose of sealing/capping the end of a sanitary sewer. The cap/stopper shall be installed on a defect free portion of the lateral. If defects are found then the contractor shall excavate the lateral until a defect free portion of the lateral is located.

      ii. If the lateral serves more than one building and IS part of a common/shared lateral:

         - If at least one service from the common lateral is intended to remain, the connecting fitting for the laterals shall be removed and replaced with a new section of straight pipe or an elbow of sufficient angle to provide a smooth transition between the existing portions of the lateral. Elbow shall be a manufactured fitting and shall be installed per manufacturer's recommendation to assure a watertight seal.

3. Manholes

   a. Manholes to be abandoned shall have their cones removed, backfilled and compacted to ninety-five percent (95%) relative compaction. Frames and

covers not to be reused shall be delivered to the City as directed by the City's Project Inspector.

3.24 REPAIR/RESTORATION OF PROPERTY

A. Any repair or restoration work resulting from Contractor's activity shall be completed within twenty-four (24) hours. Contractor may use the sod saved from the existing lawn or use new sod/seed to match existing lawn. Any concrete or other repair shall match existing. Contractor shall maintain the new planting for a minimum thirty (30) day period.

3.25 CONSTRUCTION PROCEDURES, CONNECTIONS AND SYSTEM REROUTING

A. Construction involving expansion and/or modification of the existing Collection System shall be performed in a manner resulting in the minimum possible interruption during construction.

B. Prior to the start of any construction, the Contractor shall submit a schedule of all planned flow disruptions required for completion of project and shall indicate anticipated date, work to be performed, and estimated duration of work.

C. Prior to any disruption of flow, all labor, materials, fittings, supports, equipment and tools needed for the scheduled work, as well as possible emergency work, shall be on the site.

D. All connections involving flow disruption of City's existing facilities shall be done in the presence of the City's Project Inspector. The Contractor shall complete the connection work without interruption.

E. Planned Flow Disruption

1. Flow disruptions are subject to the following constraints:

   a. Flow disruptions will not be performed on a Monday, Friday nor on the first workday following a City holiday. (It is preferred that flow disruptions also not be performed on the day preceding a City holiday, if possible.)

   b. Under special circumstances, and only upon approval by the City, flow disruptions may be scheduled on a weekend or during non-working hours.

   c. No more than two flow disruptions of the Collection System will be performed on any two consecutive workdays. This includes all disruptions whether scheduled by the City, the Contractor or other parties.

d. The City's Project Inspector must receive the flow disruption request in writing from the Contractor at least six (6) calendar days prior to the anticipated date of the disruption of flow. A bypass plan must be submitted.

e. The City will review the request to ensure that the Contractor will have all materials available and complies with all provisions of the City's procedures, including the submission of required information and scheduling requirements.

f. All excavations required to make the connection must be completed and approved at least twelve (12) hours prior to the scheduled flow disruption.

g. If the flow disruption is cancelled or cannot be performed, the Contractor will notify the City's Project Inspector at least twenty-four (24) hours in advance of the requested disruption date.

3.26 BYPASS PUMPING/SEWAGE FLOW CONTROL

A. INTENT

1. It is the intent of this Specification to provide the minimum requirements for bypass pumping/sewage flow control necessary to facilitate sewer line inspection and/or sewer line rehabilitation activities and/or new construction.

B. SCOPE OF WORK

1. CONTRACTOR shall provide all labor, equipment, supervision and materials necessary to reduce/control flows via sewage flow control mechanisms or eliminate flows via bypass pumping through a section or sections of pipe designated for inspection and/or rehabilitation. CONTRACTOR shall be responsible for controlling and maintaining all sanitary and storm flows within the sewer system during the work. CONTRACTOR may drain flows by pipes, chases, fluming, bypass pumping, or other appropriate methods approved by the DWWR. Plugging of any sewer line shall not be permitted without bypassing.

C. PROTECTION OF PUBLIC AND PRIVATE PROPERTY

1. Precautions shall be taken to ensure that flow control and dewatering operations shall not cause flooding or damage to public or private properties. In the event flooding or damage occurs, CONTRACTOR shall make provisions to correct such damage at no additional cost to the City. CONTRACTOR shall be responsible for any damages to public or private property, overflows from the sewer system and violations resulting in fines as a result of the dewatering/bypass operation.

2. CONTRACTOR shall assume all responsibility for notification to and coordination with all customers whose building sewer laterals will be out of service during the Work. Notifications shall be in writing via door hanger, door flier or U.S. mail. Notification shall be given 24-hours in advance of loss of service, (excluding weekends and holidays). Notice shall clearly state the purpose of the work, shall advise all affected customers against water usage until the sewer line is placed back in service, and shall clearly state the potential consequences of use of residential wastewater generating facilities during the time when the building sewer service will be out of service (i.e. sewer back-up). The notice shall include the project name, project number, City department name, City employee contact number, and CONTRACTOR's local 24-hour contact number for residents to call if they have questions regarding the work.

D. BYPASS PUMPING

1. When required by the Contract Documents or when required by the manufacturer of the sewer line rehabilitation product in order to facilitate the installation of a sewer line rehabilitation product, CONTRACTOR shall provide all labor, equipment and materials necessary for the transfer of flow around the section or sections of pipe designated. The bypass shall be made by diversion of the flow from an existing upstream location, around the section(s) to be taken from service for inspection or rehabilitation, to an existing downstream location. The bypass system shall be of adequate capacity to handle all flows including wet weather related flows. If bypass pumping is utilized by CONTRACTOR to control flows, CONTRACTOR shall be responsible for monitoring the bypass pumping operation at all times until work is complete. The location of pump(s), force main, discharge point, pumping rates, etc., shall be approved by DWWR.

2. CONTRACTOR shall prepare a detailed Flow Control Plan that describes the measures to be used to control flows. CONTRACTOR shall submit the Plan to and obtain approval of the Plan from the City's Project Inspector prior to beginning any flow control work. CONTRACTOR's Plan shall include, but not necessarily be limited to the following:

   - Location of flow diversion structures, collapsible sewer plugs, dams, pumps and related materials and equipment.
   - Key operational control factors, (i.e. maximum flow elevations upstream of plugs or dams).
   - Pump sizes and flow rates.
   - Destination of bypassed flows including routing of force mains and provisions for vehicular and pedestrian traffic as necessary.
   - Wet weather event procedures.

3. The number and size of pumps utilized in bypass pumping shall be such that if the largest pump is out of service, bypass flows will be maintained during the bypass operation.

E. WET WEATHER EVENTS

1. Where the flow control mechanism is not sufficient to handle a wet weather event, the flow control/diversion or pumping system shall be capable of quick removal so as not to create an overflow to surface waters, overflow to ground, or back-up in buildings.

F. MEASUREMENT AND PAYMENT

1. Payment for bypass pumping/sewage flow control, including provisions for wet weather flow control, shall be included in the contract bid prices for the related sewer line inspection, sewer line rehabilitation items and/or new construction.

3.27 AS-BUILT DRAWINGS

A. As-built drawings for all projects shall be updated daily and shall be made available to the project inspector upon request. Location of all valves and other water system appurtenances, as specified by the City's Project Inspector, shall be verified by a licensed surveyor and shall be incorporated into the as-built records at the expense of the contractor. At the completion of the project, the as-built drawings shall be submitted to the City's Project Inspector together with an electronic copy of the as-builts in a form acceptable to the City Inspector and compatible with the City's Standards. Final payment to the contractor for the project will not be made until the as-built drawings are submitted, verified and accepted.

End of Section

SECTION 03300 - MINOR CONCRETE

CONTENTS:

Part 1 - General 1

1.01 Work Included 1

1.02 Related Requirements 1

1.03 Reference Standards 1

1.04 Quality Assurance 1

1.05 Measurement And Payment 2

1.06 Submittals 2

Part 2 - Products 2

2.01 Concrete 2

2.02 Portland Cement 2

2.03 Aggregate 3

2.04 Admixtures 3

2.05 Water 3

2.06 Curing Compound 3

2.07 Forms 3

2.08 Reinforcing Bars 3

2.09 Tie Wire 3

2.10 Supports 3

2.11 Expansion Joint Fillers 4

Part 3 - Execution 4

3.01 Concrete Curbs And Sidewalks 4

3.02 Pipe Encasements And Thrust Blocks 4

3.03 Bases For Manholes 4

3.04 Footings 4

3.05 Hand Mixed Concrete 4

3.06 Repair And Restoration 4

3.07 Reinforcement 5

SECTION 03300 - MINOR CONCRETE

PART 1 - GENERAL

1.01 WORK INCLUDED

A. Work includes concrete work for minor structures like concrete curbs, sidewalks, gutters, driveways, handicapped ramps, concrete encasements, street light footings, footings for fences, cast-in-place manhole bases, thrust blocks, and other minor structures.

B. Concrete washout shall be contained and shall not be allowed to flow into the City storm drain system unless water is treated for particle removal by means of filtration, sedimentation, etc.

1.02 RELATED REQUIREMENTS

A. Section 01340, *"Submittals"*

B. Section 02400, *"Storm Sewer System"*

C. Section 02453, *"Traffic Signals"*

D. Section 02500, *"Paving and Surfacing"*

E. Section 02530, "Curb Ramps and other Minor Concrete Facilities"

F. Section 02710, *"Water System Piping and Accessories"*

G. Section 02720, *"Sanitary Sewer Collection System"*

H. Section 16550, *"Street Lighting System"*

1.03 REFERENCE STANDARDS

A. American Society for Testing and Materials (ASTM)

B. State Specifications

1.04 QUALITY ASSURANCE

A. The Contractor's attention is directed to Article 8 of the City's General Conditions (Section 00700). To validate that specified final elevations have been provided, the Contractor shall provide to the City applicable grade certificates as required by Article 8. No separate payment will be made for providing such certification. All costs therefore shall be included in the various work item(s) requiring certification.

1.05 MEASUREMENT AND PAYMENT

A. Where specified in the Special Provisions, measurement and payment for minor concrete placed in the work will be paid for at the contract price per cubic yard. The contract price for such work will include full payment for all materials, labor, equipment, and other incidentals required to construct the concrete improvements in accordance with the Plans, these specifications and Special Provisions, and as directed by the Engineer.

B. Measurement and payment for reinforcing bars will be considered included in the unit price for concrete unless specifically indicated in the Bid Schedule. When indicated in the Bid Schedule, reinforcing bars will be paid for at the contract price per pound.

C. Where no separate bid item is indicated, costs for all work and materials specified herein shall be included in the bid prices for items of work requiring concrete.

1.06 SUBMITTALS

A. Contractor shall submit a certificate showing that materials used on the project meet the requirements of these specifications.

B. Contractor shall furnish samples of construction materials in such quantities as may be required by the Engineer for testing purposes, at no additional cost to the City.

C. Contractor shall submit a certificate of compliance for the Portland Cement concrete mix design.

D. Contractor shall submit a certificate of compliance for reinforcing bars.

PART 2 - PRODUCTS

2.01 CONCRETE

A. Concrete for concrete curbs, sidewalks, driveways, gutters, handicapped ramps, catch basins, street light footings, and cast-in-place manhole bases shall be Class A concrete and shall contain not less than five hundred sixty four pounds (564#) of Portland cement per cubic yard unless otherwise specified herein or in the Special Provisions.

B. Concrete for pipe encasements, thrust blocks, trench caps, and footings for fences shall be Class B concrete and shall contain not less than four hundred seventy pounds (470#) of Portland cement per cubic yard.

2.02 PORTLAND CEMENT

A. Portland cement shall conform to the provisions in Section 90-2.01, "Portland Cement," of the State Specifications.

B. Concrete for pipe encasements, thrust blocks, trench caps, and footings for fences shall be Class B concrete and shall contain not less than four hundred seventy pounds (470#) of Portland cement per cubic yard.

2.03 AGGREGATE

A. Aggregate shall be clean and free from deleterious coatings and other extraneous materials, conforming to the gradation requirements for one and one-half inches (1-1/2") maximum by three-quarter inch (3/4") minimum, in Section 90-3.02, "Coarse Aggregate Grading," of the State Specifications.

2.04 ADMIXTURES

A. If authorized in writing by the Engineer, the use of admixtures shall conform to the provisions in Section 90-4, "Admixtures," of the State Specifications. Concrete containing admixtures shall be subject to the same compliance testing as specified for various classes of concrete.

2.05 WATER

A. Water used for washing, mixing, and curing shall be free from oil, salts, and other impurities, which would discolor or etch the surface or have an adverse effect on the quality of the concrete.

2.06 CURING COMPOUND

A. Curing compound for use on concrete surfaces exposed to the air shall be "Non-Pigmented Curing Compound - Chlorinated Rubber Base-Clear," conforming to Section 90-7.01B, "Methods of Curing", of the State Specifications.

2.07 FORMS

A. Form materials shall be free from warp, with smooth and straight upper edges, and if used for the face of curb, shall be surfaced on the side against which the concrete is to be placed. Wooden forms for straight runs shall have a net thickness of one and one-half inches (1-1/2"). Metal forms shall be of a gage that will provide equivalent rigidity and strength. Forms shall be supported to adequately resist springing or deflection from placing and tamping the concrete.

2.08 REINFORCING BARS

A. Unless otherwise specified, reinforcing bars shall be either Grade 40 or 60 billet steel, conforming to ASTM A 615.

2.09 TIE WIRE

A. Tie wire shall be 16 gage, black annealed.

2.10 SUPPORTS

A. Reinforcements shall be supported by metal, galvanized, plastic-coated, of approved manufacture, except that concrete blocks shall be used for slabs on grade.

2.11 EXPANSION JOINT FILLERS

A. Pre-molded joint fillers shall conform to Section 51-1.12C, "Pre-molded Expansion Joint Fillers," of the State Specifications.

B. Sheet packing, preformed pads and board fillers shall conform to Section 51-1.12D, "Sheet Packing, Preformed Pads and Board Fillers," of the State Specifications.

PART 3 - EXECUTION

3.01 CONCRETE CURBS AND SIDEWALKS

A. Construction of concrete curbs, gutters, sidewalks, island pavings, handicapped ramps, and driveways shall conform to Section 73, "Concrete Curbs and Sidewalks," of the State Specifications and applicable City Standard Drawings.

3.02 PIPE ENCASEMENTS AND THRUST BLOCKS

A. Concrete pipe encasements and thrust blocks shall conform to Section 02710, "Water System Piping and Accessories," and Section 02720, "Sanitary Sewer Collection System," of these specifications and applicable City Standard Drawings.

3.03 BASES FOR MANHOLES

A. Cast-in-place concrete bases for manholes shall conform to Section 02720, "Sanitary Sewer Collection System," and Section 02400, "Storm Sewer System," of these specifications and applicable City Standard Drawings.

3.04 FOOTINGS

A. Footings for street lighting, traffic signals, and fences shall conform to Section 16550, "Street Lighting System," Section 02453, "Traffic Signals," and Section 02445, "Fences and Gates," of these specifications and applicable City Standard Drawings.

3.05 HAND MIXED CONCRETE

A. Hand mixed concrete, if authorized by the Engineer, shall conform to Section 90-6.05, "Hand Mixing," of the State Specifications.

3.06 REPAIR AND RESTORATION

A. Repairs to sidewalks, driveways, curbs, gutters, and ramps shall be made by removing and replacing the entire unit between scoring lines or joints. The Contractor shall match, as closely, the texture, finish, and color of adjacent existing structure.

3.07 REINFORCEMENT

A. Reinforcing bars shall be placed, spliced, bent, and cleaned in accordance with Section 52, "Reinforcement", of the State Specifications.

End of Section

SECTION 09900 - PAINTING

CONTENTS:

Part 1 - General 1

1.01 Work Included 1

1.02 Related Requirements 1

1.03 Reference Standards 1

1.04 Quality Assurance 1

1.05 Measurement And Payment 1

1.06 Storage Of Materials 1

1.07 Submittals 2

Part 2 - Products 2

2.01 Paint For Steel Tanks (Exterior Only) 2

2.02 Paint For Concrete Tanks (Exterior Only) 2

2.03 Paint For Buildings And Appurtenances 2

Part 3 - Execution 4

3.01 Surface Preparation 4

3.02 Application 5

3.03 Cleanup 6

SECTION 09900 - PAINTING

PART 1 - GENERAL

1.01 WORK INCLUDED

A. The work to be done consists of furnishing all labor, materials, tools, equipment, scaffolding, and all other necessary equipment and supplies for doing all the work involved in applying paint to buildings and miscellaneous structures (except pavement markings and street signs), as shown on the plans and as specified in these specifications, and as directed by the Engineer.

1.02 RELATED REQUIREMENTS

A. Section 01340, "Submittals"

B. Section 01740, "Warranties and Bonds"

1.03 REFERENCE STANDARDS

Not used

1.04 QUALITY ASSURANCE

A. Paints shall be applied in accordance with manufacturer's printed directions.

1.05 MEASUREMENT AND PAYMENT

A. Cleaning and painting shall be paid for on a Lump Sum price, unless otherwise specified in the Special Provisions. The Lump Sum price paid for shall include full compensation for furnishing all labor, materials, tools, equipment, and incidentals for doing all work involved in the cleaning and painting of the work, as shown on the plans and as specified in these specifications and Special Provisions, and as directed by the Engineer.

B. Where no separate payment is specified, costs for all work and materials specified herein shall be included in bid items requiring painting.

1.06 STORAGE OF MATERIALS

A. Paints shall be stored in a protected area with temperatures between forty degrees and one hundred degrees Fahrenheit (40°F-100°F). Materials shall not be used if storage conditions or minimum shelf life have been exceeded.

1.07 SUBMITTALS

A. Before ordering materials, the Contractor shall submit two (2) samples of each material, including color charts, to be used for approval of the Engineer.

B. The Contractor shall provide the City with Manufacturer's warranty on the product, and a certificate of compliance with the applicable ASTM or Federal Standards, where containers do not show such information, as per Section 01740, "Warranties and Bonds."

PART 2 - PRODUCTS

2.01 PAINT FOR STEEL TANKS (EXTERIOR ONLY)

A. Paint for steel tanks shall be products of Engard Coatings Corporation, or approved equal.

Primer	Engard 101 Quick Dry Primer	2 mils
Second Coat	Engard 352 H.B. Vinyl Coating	4 mils
Third Coat	Engard 362 Acrylic Vinyl Finish	2 mils

2.02 PAINT FOR CONCRETE TANKS (EXTERIOR ONLY)

A. Paint for concrete tanks shall be products of Engard Coatings Corporation, or approved equal.

Filler for voids & cracks	Engard 490 Epoxy Putty	-
Primer	Engard 424 Primer	2.0 mils
Second Coat	Engard 230 Acrylic Finish	1.5 mils
Third Coat	Engard 230 Acrylic Finish	1.5 mils

2.03 PAINT FOR BUILDINGS AND APPURTENANCES

A. Paint for buildings and miscellaneous appurtenances shall be products of Dunn-Edwards, or comparable quality products of Glidden-Durkee, Sherwin Williams, Sinclair, Kelly-Moore, or approved equal. (The products listed below are Dunn-Edwards.)

B. Exterior

1. Stucco, Concrete and Masonry:

a. Patching - Custom Patch

b. Primer - W 709 Eff-Stop

c. Second and Third Coats - W 701 Evershield

2. Wood:

   a. Patching - Custom Patch
   b. Primer - 42-1 Compo
   c. Second and Third Coats - W 701 Evershield

3. Metal doors, gutters, flashing, rails, and metal trims:

   a. Primer - QD 43-7 Galv-Alum
   b. Second and Third Coats - QD 2 Aristolite

4. Other ferrous, galvanized, and aluminum surfaces:

   a. Primer - Van Prime W 711
   b. Second and Third Coats - W 701 Evershield

C. Interior

1. Stucco, concrete, and masonry:

   a. Crack Filler - Eternaflex Neoprene Sealing Compound
   b. Primer - W 101 Vinyl
   c. Second and Third Coats - W 450 Decoglo

2. Gypsum Drywall:

   a. Crack Filler - Eternaflex Neoprene Sealing Compound
   b. Primer - W 101 Vinylastic
   c. Second and Third Coats - W 450 Decoglo

3. Wood (Painted Finish):

   a. Crack Filler - Eternaflex Neoprene Sealing Compound
   b. Primer - W 707 Unikote
   c. Second and Third Coats - W 450 Decoglo

4. Wood (Varnish Finish):

   a. First Coat - V 108 Stain
   b. Second Coat - V 106A Sanding Sealer
   c. Third Coat - V 198 Flat Varnish, or V 199 Pale Satin Varnish, or V 197 Pale Gloss Varnish

5. Wood (Lacquer Finish):

   a. First Coat - LW 120 Deco
   b. Second Coat - ELQ 101 Sanding Sealer
   c. Third and Fourth Coats - ELQ 104 Semi-Gloss Lacquer

PART 3 - EXECUTION

3.01 SURFACE PREPARATION

A. All surfaces to be painted shall be cleaned free of loose dirt and dust. All loose, chalking or scaling paint shall be removed by sanding, wire brushing, or scraping. Holes, cracks, and damaged spots shall be patched, filled, finish flush to adjoining surfaces.

B. All surfaces shall be sterilized before repainting to remove mildew. These surfaces shall be cleaned by high pressure water washing with the following solution:

Trisodium Phosphate ("TSP")	=	2/3 cup
Household Bleach ("Clorox")	=	1 quart
Powdered Detergent	=	1/3 cup

Add warm water to make one (1) Gallon

C. Rinse surface applied with solution and allow to dry completely.

D. All sterilizing solution wash water and rinse water shall be contained for disposal into the sanitary sewer system and must not be allowed to enter City storm drains.

E. Wood surfaces shall be uniformly abraded by hand or power sanding and shall be roughened sufficiently to ensure a good bond with the base surface.

F. Metal surfaces shall be uniformly abraded by hand or power sanding or by sandblasting. Power impact tools shall remove stratified rust. Loose mill scale, loose rust, and loose paint shall be removed by power wire brushing, power grinding, or sandblasting. Remove all dust and loose matter from the surface by vacuuming. Blast cleaning shall conform to Section 59-2.03, "Blast Cleaning," of the State Specifications. Newly cleaned surfaces shall be prime-coated the same day. All blast material removed shall be properly collected and disposed as solid waste.

G. New concrete surfaces shall cure at least thirty (30) calendar days and have a moisture content below eight percent (8%) prior to coating. Concrete surface shall be cleaned by abrasive "brush-off" blast or etched with ten percent (10%) hydrochloric acid. Acid solution shall be applied at the rate of one and one-half (1-1/2) pints per Square Yard to obtain a total wetting of the substrate, and thoroughly worked into the surface by stiff bristled brushes until the bubbling reaction has subsided. Thoroughly wash and scrub etched surfaces by high-pressure water hosing to remove all salts and loose particles. Wash water shall be collected, then neutralized to a pH value between 5 and 9, and then disposed of, in the sanitary sewer system. Wash water shall not be allowed to flow into the City storm drain system.

H. Previously painted concrete surfaces or old unpainted concrete surfaces shall be stiff-brush cleaned and sterilized with a solution as described in Paragraph 3.01 B. Rinse surface and allow to dry completely. Sterilizing solution and rinse shall be contained for disposal into the sanitary sewer system and must not be allowed to enter the City storm drain system.

I. Remove all hardware and accessories not to be painted, or provide surface protection. Following completion of painting of each area, reinstall all removed items, by workers skilled in the trades involved.

J. All stucco and concrete blocks shall be water-blasted to remove dust and dirt.

K. Fill hairline cracks, small holes, and imperfections on plaster surfaces with patching plaster. Smooth off to match adjacent surfaces. Wash and neutralize high-alkali surfaces where they occur.

3.02 APPLICATION

A. Paint shall be applied only on thoroughly dry surfaces during periods of favorable weather. Painting will not be permitted in rainy, damp, misty, or frosty weather, or then the temperature is below thirty-five degrees Fahrenheit (35°F) or when the relative humidity exceeds eighty five percent (85%) at the job site. Exterior blast cleaning or spray painting of solvent-borne paint will not be permitted when the wind velocity is more than fifteen miles per hour (15 mph).

B. Paint shall be applied by brush, spray, roller, or any combination of these methods.

C. No coating shall be applied during rain or fog, during periods of high humidity, when condensation of the cleaned surface could occur, or when conditions are present that could create the adherence of dust, debris, or insects to freshly painted surfaces.

D. Surfaces shall be primed the same day that the blast cleaning is done.

E. Each application of paint shall be thoroughly cured and subject to inspection with holiday detector. Any skips, holidays, thin areas or other deficiencies shall be corrected before the succeeding application. The surface of the paint being covered shall be free from moisture, dust, grease, or deleterious material, which would prevent the bond of succeeding applications.

F. Each coating shall be checked for the desired dry film thickness where thickness is indicated. Use a "Mikrotest" on ferro-magnetic substrates, and an "Elcometer" on non-ferrous metallic substrates. Work that does not meet the required dry film thickness, or which is uneven or blotchy, shall be recoated at the Contractor's expense, as directed by the Engineer.

G. First finish coat shall be of a different shade from second finish coat in order to evaluate and observe application of the second finish coat. The Contractor shall leave two (2) gallons of unopened finish coats of each color for touch-up.

3.03 CLEANUP

A. The Contractor shall remove all dropped and splattered paint and other stains and blemishes resulting from his operations. If such stains or blemishes cannot be satisfactorily removed from surfaces painted by the Contractor, or from existing finished surfaces, such surfaces shall be repainted or refinished at Contractor's expense in such manner that it shall match satisfactorily with the adjacent existing surfaces, and in a manner satisfactory to the Engineer.

B. The Contractor shall dispose of all latex paint wash water into the sanitary sewer. Oil based paint waste shall be properly disposed of as hazardous waste.

End of Section

SECTION 16550 - STREET LIGHTING SYSTEM

CONTENTS:

Part 1 - General 1

1.01 Work Included 1

1.02 Related Requirements 1

1.03 Reference Standards 1

1.04 Quality Assurance 1

1.05 Measurement And Payment 2

Part 2 - Products 3

2.01 Compatibility With Existing System 3

2.02 Poles/Standards 3

2.03 Luminaires 4

2.04 Conduit 4

2.05 Conductors 5

2.06 Pull Boxes 5

2.07 Ground Wire 5

2.08 Concrete 5

2.09 Anchor Bolts 5

2.10 Splice Connectors 5

2.11 Pull Rope 5

Part 3 - Execution 6

3.01 Excavation 6

3.02 Conduit 6

3.03 Conductors 6

3.04 Grounding 7

3.05 Pull Rope 7

3.06 Footings 7

3.07 Pull Boxes 7

3.08 Changes For Lines And Grades 7

3.09 Pavement Replacement 7

3.10 Tests 8

SECTION 16550 - STREET LIGHTING SYSTEM

PART 1 - GENERAL

1.01 WORK INCLUDED

A. Furnishing and installing of street lighting system on residential streets. See applicable City Standard Drawings, Project Plans and Special Provisions.

1.02 RELATED REQUIREMENTS

A. Section 01340, *"Submittals"*

B. Section 01600, *"Materials"*

C. Section 02453, *"Traffic Signals and Lighting"*

D. Section 03300, *"Minor Concrete"*

1.03 REFERENCE STANDARDS

A. State Specifications

B. State of California, Electrical Safety Orders (ESO), Title No. 8

C. State California, Public Utilities Commission, Code Rule #128

D. National Electric Code (NEC)

1.04 QUALITY ASSURANCE

A. All materials furnished under this section shall conform to the current standards of the National Electrical Manufacturers Association (NEMA), the Underwriters Laboratories, Inc. (UL), the Electrical Testing Laboratories (ETL), and the National Electrical Testing Association (NETA).

B. A certificate of compliance conforming to the provisions in Section 6-1.07, "Certificate of Compliance," of the State Specifications shall be submitted in quantities specified in Section 01600, "Materials," prior to the use of any material in this project.

1.05 MEASUREMENT AND PAYMENT

A. Measurement on Unit Basis

1. Conduit: Conduit will be measured by the Linear Foot between centers of electroliers and/or boxes, along the conduit routes as shown on the plans.

2. Conductors: Each individual run of conductor wire will be measured in horizontal distances by the Linear Foot between centers of electroliers and/or boxes, along the conduit routes as shown on the plans.

3. Combined conduit with conductors (wiring) also will be measured by the linear foot, as specified for items 1 and 2 above.

4. Boxes: Splice boxes, pull boxes, and other electrical boxes will be measured for payment on the basis of the actual number of units installed of the respective types and sizes.

5. Electroliers: Electroliers will be measured for payment based on the actual number of units installed of the respective type.

6. Service Connection: Service connections will be measured for payment based on the actual number of service connections provided. When specified in the Special Provisions, no separate payment will be made for service connection(s) and all costs therefore shall be included in work items requiring service.

B. Payment on Unit Price Basis

The quantities of the respective items, measured as stated above, and accepted, shall be paid for at the respective unit prices as per Schedule of Bid, which prices and payments shall constitute compensation in full for furnishing all labor, materials, tools, and equipment necessary to complete the work in place:

1. Conduit: The price paid per Linear Foot shall include the conduit, trenching, backfill, restoration of paved surfaces, and disposal of surplus materials, broken pavement, and broken concrete.

2. Conductors: The price paid per Linear Foot shall include conductors and all testing required for insulation resistance.

3. Boxes: The price paid per Each shall include the boxes, covers, earthwork, excavation, backfill, and restoration of paved surfaces.

4. Electroliers: The price paid per Each shall include the light standards, bases, arms, luminaries, photo-electric controls (when specified), wiring from base to luminaire, and excavation, backfill, and concreting of foundations.

5. Service Connections: The price paid per Each shall include the service charge and all necessary incidentals. The required wire shall be included in the previously listed pay item for conductors. The Contractor shall apply for and pay all required service connection fees, unless specified otherwise in the Special Provisions. On City-funded projects, the Contractor is responsible for notifying the City and PG&E when the service connection is required, and the City shall pay the fees.

6. Included in the above unit price payments: The Contractor shall furnish and install all accessory work and materials required for a functional street lighting system, complete in place.

C. Grouping: When grouping of the above items occurs, payment will only be made once.

D. Inclusive payment for Electroliers

1. When so specified in the Special Provisions, unit price payment for electroliers will include costs for associated conduit, wiring, boxes and service connection(s) and all other accessory work and materials required for a complete and functional street lighting system as shown on the plans and specified.

E. Inclusive Lump Sum Project for Street Lighting System

1. When so specified, in the Special Provisions, a lump sum payment will be made for the street lighting system, complete. This lump sum payment will include costs for all work and materials required to provide a complete and functional system.

PART 2 - PRODUCTS

2.01 COMPATIBILITY WITH EXISTING SYSTEM

A. All products must be provided and installed to allow interchangeability with other products in the City's street lighting system, unless specifically approved otherwise.

2.02 POLES/STANDARDS

A. Unless otherwise specified or shown, provide State Type 15 Lighting Standard with six foot (6') elliptical arms, thirty foot (30') high pole and thirty five foot (35') mounting height, and 0.1196 inch thick aluminum pole.

B. See applicable City Standard Drawings for installation details.

2.03 LUMINAIRES

A. For the items listed in Paragraphs 2.03 B, C and D, and indicated by an asterisk, ("*"), catalog numbers may be changed by manufacturer. Contractor shall submit samples for approval by the Engineer prior to purchase and installation of any equipment.

B. * 100 Watts: GE Style M-250 A2 Power/Door, glass refractor, 240-volt, HPF Reactor or LAG ballast, with P.E. receptacle. Use Catalog #M2AR10S0H2GMN32U for multiple circuitry. Use Catalog #M2AR10SXS1GMN32035 for series circuitry.

C. * 150 Watts: GE Style M-250 A2 Power/Door glass refractor, 240 volt, auto regulator ballast, with P.E. receptacle. Use Catalog #M2AR15S0H2GMS32U for multiple circuitry. Use Catalog #M2AR15SXS1GMN32035 for series circuitry.

D. * 250 Watts: GE Style M-250A2 Power/Door glass refractor, 240 volt, auto regulator ballast with P.E. receptacle. Use Catalog #M2AR25S0A2GMS32U for multiple circuitry.

E. Photoelectric Unit:

Dark to Light Catalog #D124-1.0-SM, 105-300 VAC, 60Hz, 1800 VA, 1000 watt load.

F. Fuseholder and Fuses by Buss or equal:

Waterproof 600 V renewable, 2-pole fuse holder, complete with boots and 30 amp fuses (locate in base of pole).

2.04 CONDUIT

A. Conduit shall be as follows:

1. Metallic Conduit: Rigid steel conduit shall be sized according to NEC Requirements and shall be hot dipped galvanized both inside and outside, and shall be as tested and approved by Underwriter Laboratories or other approved laboratory.

2. Non-Metallic Conduit (for Multiple System): Rigid non-metallic conduit shall be sized according to NEC Requirements and shall be Schedule 40, conforming to the requirements of the UL Standard for Rigid-Non-Metallic Conduit (Publication UL 651).

2.05 CONDUCTORS

A. Conductors for multiple circuits shall be UL listed and rated for 600 volt operation, conforming to the requirements of Section 86-2.08B, "Multiple Circuit Conductors", of the State Specifications, and of the size and type indicated on the Plans.

B. Conductor from luminaire to pull box shall be #10 AWG stranded with THHN insulation. Wire size for main feeder shall be designed for the circuit and of the size indicated on the Plans.

C. All below ground conductors shall have a "WET Rating" insulation as specified by the NEC.

2.06 PULL BOXES

A. Pull boxes shall be Christy #N16 (State #5) or approved equal. Covers for pull boxes shall be precast reinforced concrete lid with "STREET LIGHT" marked on them.

2.07 GROUND WIRE

A. Ground wire shall be #4 standard stranded bare copper.

2.08 CONCRETE

A. Concrete shall be in accordance with Section 03300, "Minor Concrete," of these specifications.

2.09 ANCHOR BOLTS

A. Anchor bolts shall be steel-hot galvanized dipped.

2.10 SPLICE CONNECTORS

A. Splice connectors and splicing shall be approved UL listed type compression sleeve, using Method "B" or high voltage method as required all as shown on State Plan ES-13.

2.11 PULL ROPE

A. Pull rope, when specified or called for in the Plans, shall be nylon or polypropylene, with a medium tensile strength of five hundred pounds (500#).

PART 3 - EXECUTION

3.01 EXCAVATION

A. Trench excavation and backfill shall conform to Section 02221, "Trench Excavation and Backfill," of these specifications.

B. See General Condition No. 41 of Section 00700 for special protective requirements relating to existing "high-voltage" street lighting conduits that may be encountered during excavation.

3.02 CONDUIT

A. All bends in rigid steel conduit shall have a minimum radius of eighteen inches (18") and any bend showing appreciable flattening shall not be used. Joints shall have clean cut threads and reamed ends, and shall be made up with red lead and linseed oil applied to the male thread only, to provide a watertight joint. All conduit ends in electrolier bases shall extend three inches (3") above the top of the concrete base, and shall slope toward the pole handhole. Ends shall be capped until cables are installed. Bonding bushings shall be installed on conduit ends immediately before pulling in cables. Bond wire to be minimum #6 AWG.

B. Bending of non-metallic conduit shall be by methods recommended by the conduit manufacturer and with equipment approved for the purpose. Equipment shall not expose conduit to direct flame. Conduits shall be laid in accordance with Section 86-2.05C, "Installation", of the State Specifications.

C. For all conduits entering pull boxes, the edge of conduits terminating in pull boxes shall be sealed with approved duct sealing compound after conductors have been installed.

3.03 CONDUCTORS

A. Conductors shall be drawn in conduit after the installation of the conduit run has been completed, and the conduit has been cleaned or swabbed out, and if the conduit is installed in a concrete foundation, after the concrete has attained a compressive strength of at least one thousand pounds per square inch (1,000 psi).

B. Conductors shall be installed without injury to the insulation. Where two cables are to be installed in the same conduit, both cables shall be drawn into the conduit at the same time.

C. Conductors shall be continuous from luminaire to luminaire or to junction box without a splice, except those splices, if necessary, may be made in any pole base or junction box.

3.04 GROUNDING

A. Each electrolier pole shall be adequately grounded as shown on the applicable City Standard Drawings.

B. In making grounding connections, the surfaces to which connections are to be applied shall be thoroughly cleaned in order to form a good electrical contact. Copper ground clamps shall be used as required. A bolted connection shall be used when connecting the ground wire to the metal poles.

3.05 PULL ROPE

A. Pull rope shall be terminated by doubling back at least two feet (2') back into the conduit.

3.06 FOOTINGS

A. Footings for poles and standards shall be Class A concrete conforming to Section 03300, "Minor Concrete," of these specifications.

3.07 PULL BOXES

A. Pull boxes shall be installed as indicated in Section 86-2.06, "Pull Boxes", of the State Specifications.

B. All pull boxes shall be located in non-roadway areas.

C. Spacing between pull boxes shall not exceed one hundred feet (100').

3.08 CHANGES FOR LINES AND GRADES

A. Any changes in the line or grade of the new conduit runs, or the location of electroliers or boxes due to interference with existing utilities or other obstructions shall be performed by the Contractor without additional compensation, except where significant changes in bid item quantities are required, and said changes are approved by the Engineer.

3.09 PAVEMENT REPLACEMENT

A. Where the trench for the conduit or cable is in an improved street, the area shall be restored in accordance with the plans and the Standard Drawings and Section 02500, "Paving and Surfacing," of these specifications.

B. Base of pole shall be grouted to meet existing grade.

3.10 TESTS

A. The street lighting system shall be tested for insulation resistance and for operational functioning in accordance with the standard requirements of the City and of the utility company. All the conductors shall be tested for insulation resistance between conductors and from each conductor to ground. For Multiple System, insulation resistance shall be measured with a Megger type instrument having a D.C. test potential of not less than two hundred fifty volts A.C. (250 VAC). Insulation resistance to ground shall be not less than one (1) megohm per one thousand (1,000) linear feet, and from line to line, not less than one and five tenths (1.5) megohms per one thousand (1,000) linear feet.

B. Tests shall be conducted in the presence of the Engineer. The system shall be further tested by being operated for three (3) consecutive nights.

End of Section

PART IV – STANDARD DRAWINGS

(White Pages)

CITY OF DALY CITY

PART IV - STANDARD DRAWINGS

TABLE OF CONTENTS

Miscellaneous

M-1	Survey Monument Installation with Frame
M-2	Brass Cap for Survey Monument
M-3	Chain Link Fence

Parks

PR-1	Tree Staking
PR-2	Tree Well
PR-3	Root Control Barrier - Details
PR-4	Root Control Barrier - Typical Specification
PR-5	Reduced Pressure Backflow Prevention Device
PR-6	Pop-Up Sprinkler Head Installation
PR-7	Remote Control Valve Detail
PR-8	Pressure Gauge Detail
PR-9	Quick Coupler Installation
PR-10	Gate Valve Assembly
PR-11	Irrigation Thrust Blocks for Main Lines
PR-12	Median Planting Clearances
PR-13	Street Tree Clearances
PR-14	Sidewalk Tree Placement
PR-15	Dripline Subsurface Irrigation System Details
PR-16	Typical Dripline Layouts
PR-17	Shrub/Tree Bubbler
PR-18	Trunk and Branch Structure
PR-19	Tree Planting Details

Streets

S-1	Street Design Criteria, Typical Section, Intersection & Cul-De-Sac
S-2	Curb, Gutter, and Sidewalk
S-3	Driveway – Residential/Commercial
S-4	Curb Ramp Details - I
S-5	Curb Ramp Details - II
S-6	Accessible Parking Details - I
S-7	Accessible Parking Details - II
S-8	Typical Pipe Trench-Excavation and Backfill Requirements
S-9	Street Trenching and Patching
S-10	Typical Street Lighting
S-11	Typical Street Name Sign and Sign Location
S-12	Street Name Sign Construction
S-13	Internally Illuminated Street Name Sign - General
S-14	Internally Illuminated Street Name Sign - Fabrication Details
S-15	Internally Illuminated Street Name Sign - Bracket Details - I
S-16	Internally Illuminated Street Name Sign - Bracket Details - II
S-17	Internally Illuminated Street Name Sign - Bracket Details - III
S-18	Single Face Monument Sign Details - I

S-19 Single Face Monument Sign Details - II
S-20 Typical Traffic Signs Fabrication and Installation
S-21 Traffic Sign - Median Installation
S-22 Traffic Striping Markers
S-23 Parking Meter Post
S-24 Pedestrian Push Button Instructions
S-25 Off Street Parking Stall Criteria
S-26 Construction Project Identification Sign

Storm Drain

SD-1 Catch Basin - Plan, Section and Gutter Depressions
SD-2 Catch Basin - Section and Details
SD-3 Catch Basin - With Trap and Cleanout for Combined Sewer/Storm System
SD-4 Storm Drain Manholes - For Pipe 48” Diameter or Smaller
SD-5 Curb Face Drainage Outlet

Sanitary Sewer System

SS-1 Non-Pressure Type Manhole Frame and Cover
SS-2 Pressure Type Manhole Frame and Cover
SS-2A Polyethylene Manhole Adjustment Ring Slope Design
SS-3 Sanitary Sewer Manhole (Cast In Place)
SS-5 Sanitary Sewer Testing Tee
SS-6 Grease & Sand Interceptor
SS-6A Grease Interceptor
SS-7 Sewer Lateral Details (For Pipes Smaller Than 6-Inch)
SS-7A Sewer Lateral Connections (For 6-Inch Pipe and Larger)
SS-8 New Sewer Pipe Support Across Trenches
SS-9 Side Sewers at Utility Intersections
SS-10 Trench Dam
SS-11 Flexible Connection at Manhole Tie-In (When Required)
SS-12 Clean Out & Backwater Valve
SS-13 New Utility Pipe Crossing Existing Sewer Pipe

Water System

W-1 1” Water Service Lateral -Connection for 3/4” or 1” Meter
W-2 Water Service Lateral - 1” and 2” Combination Service Connections
W-3 2” Water Service Lateral for 1-1/2” or 2” Meter
W-4 Water Service Lateral - 3" and Larger
W-5 Water Main Connection - Fire Hydrants (Residential Area)
W-5A Water Main Connection – Fire Hydrant Valve Detail (Residential Area)
W-6 Water Main Connection - Fire Hydrants (Commercial Area)
W-7 Below Ground Blow-Off Details
W-7A Above Ground Blow-Off Details
W-8 Air Release Valve Assembly
W-8A Reduced Pressure Backflow Prevention Device
W-9 Fire Detector - Check Valve and Connections
W-9A Fire Service For Multi-Storey Residential Building (As Required)
W-10 Water Main Thrust Blocks
W-11 Angle Marker Details

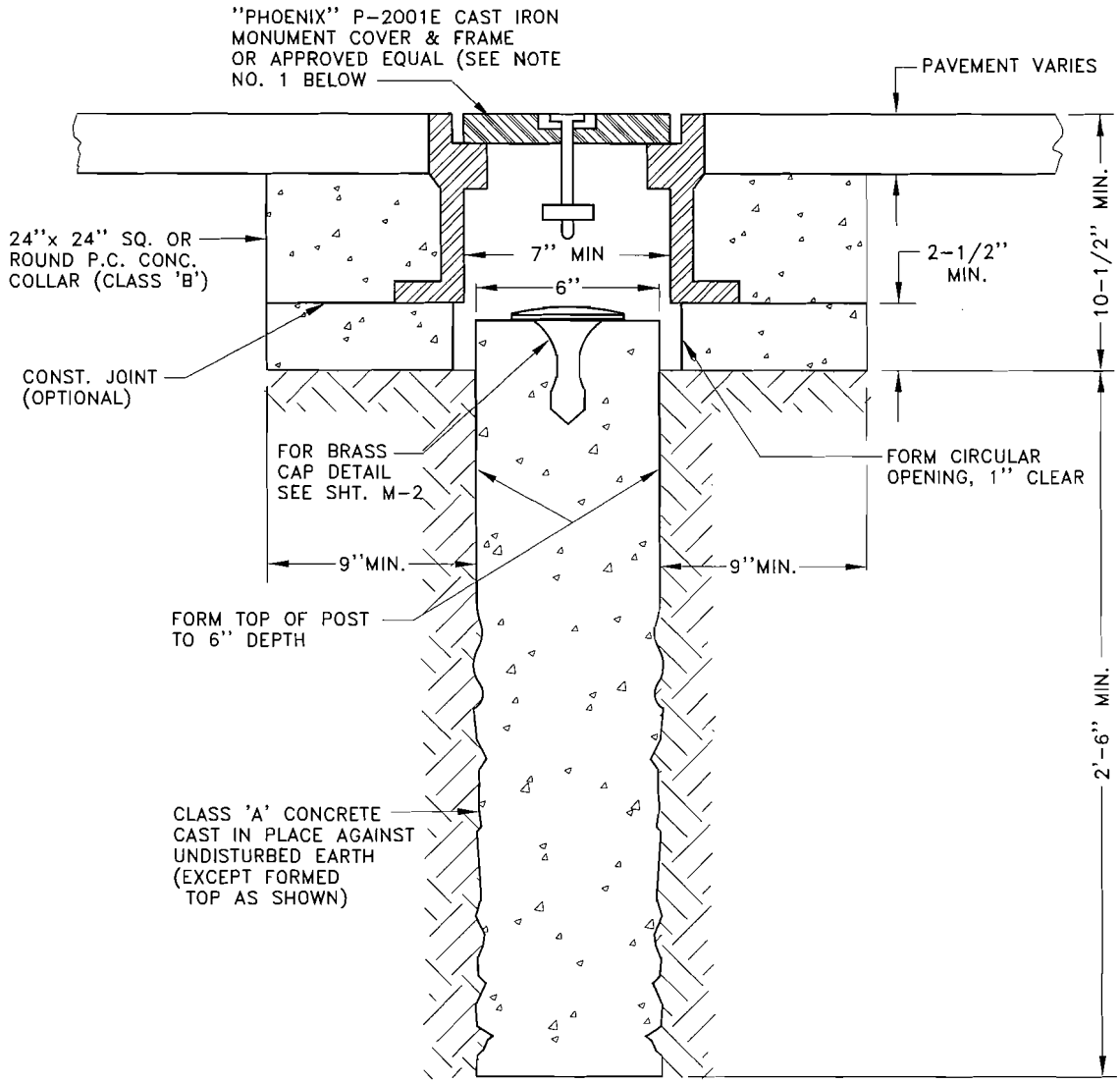

SECTION
NO SCALE

NOTES:

1. MONUMENT COVERS & FRAMES SHALL BE TOUGH GREY IRON CASTINGS CONFORMING TO ASTM A-48, CLASS 30 B. EACH COVER SHALL BE GROUND OR OTHERWISE FINISHED SO THAT IT WILL FIT ITS FRAME WITHOUT ROCKING.

2. "MONUMENT" SHALL BE INSCRIBED ON COVER.

CITY OF DALY CITY, CALIFORNIA — DEPARTMENT OF PUBLIC WORKS

SURVEY MONUMENT INSTALLATION WITH FRAME

DRAWN BY : A. TAN

DATE: 6/03

APPROVED BY: M P Sharma, CITY ENGINEER

STANDARD DRAWING NO. M-1

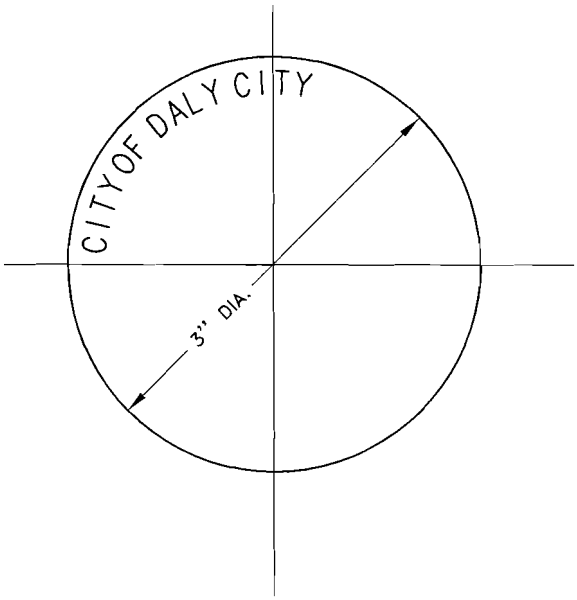

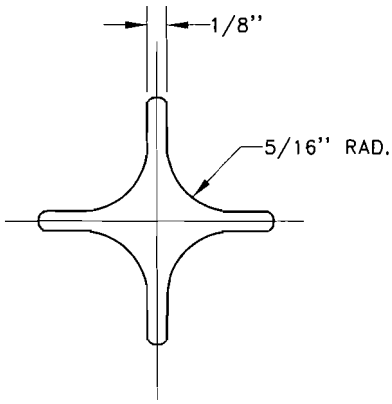

SECTION A–A
N.T.S.

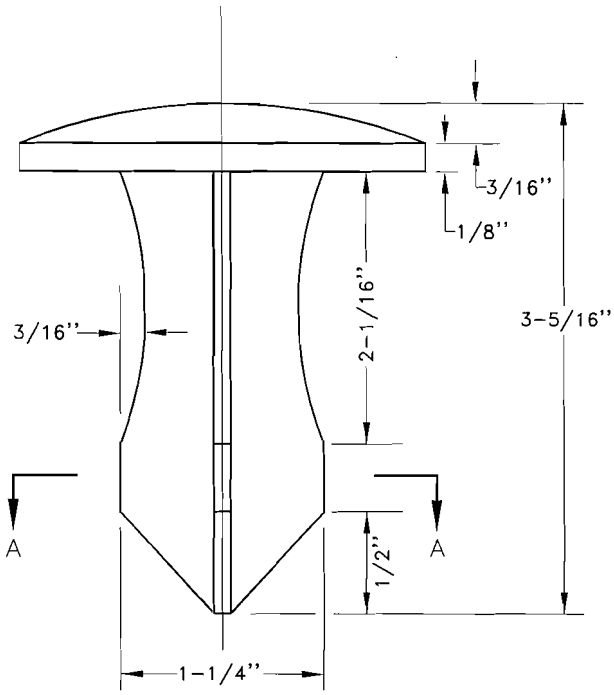

NOTES:

1. MATERIAL TO BE USED IN CASTING SHALL BE LEADED RED BRASS (836) OR TIN BRONZE (903), CONFORMING TO A.S.T.M. B584.
2. MARKINGS TO BE APPROX. 1/32" WIDE 1/32" DEEP, USING 3/16" LETTERS SPACED AS SHOWN.
3. THE SURVEY MONUMENT CAP CAN BE PURCHASED AT CITY ENGINEER'S OFFICE.
4. MONUMENT SHALL BE PUNCHED BY A LICENSED SURVEYOR.
5. THE ELEVATION SHALL BE RECORDED ON AS-BUILT DWG.TO BE PROVIDED TO THE CITY AND SHALL BE ON 1929 NGVD.

CITY OF DALY CITY, CALIFORNIA — DEPARTMENT OF PUBLIC WORKS

BRASS CAP FOR SURVEY MONUMENT

DRAWN BY : A. TAN

DATE: 6/03

APPROVED BY: MP Sharma, CITY ENGINEER

STANDARD DRAWING NO. M-2

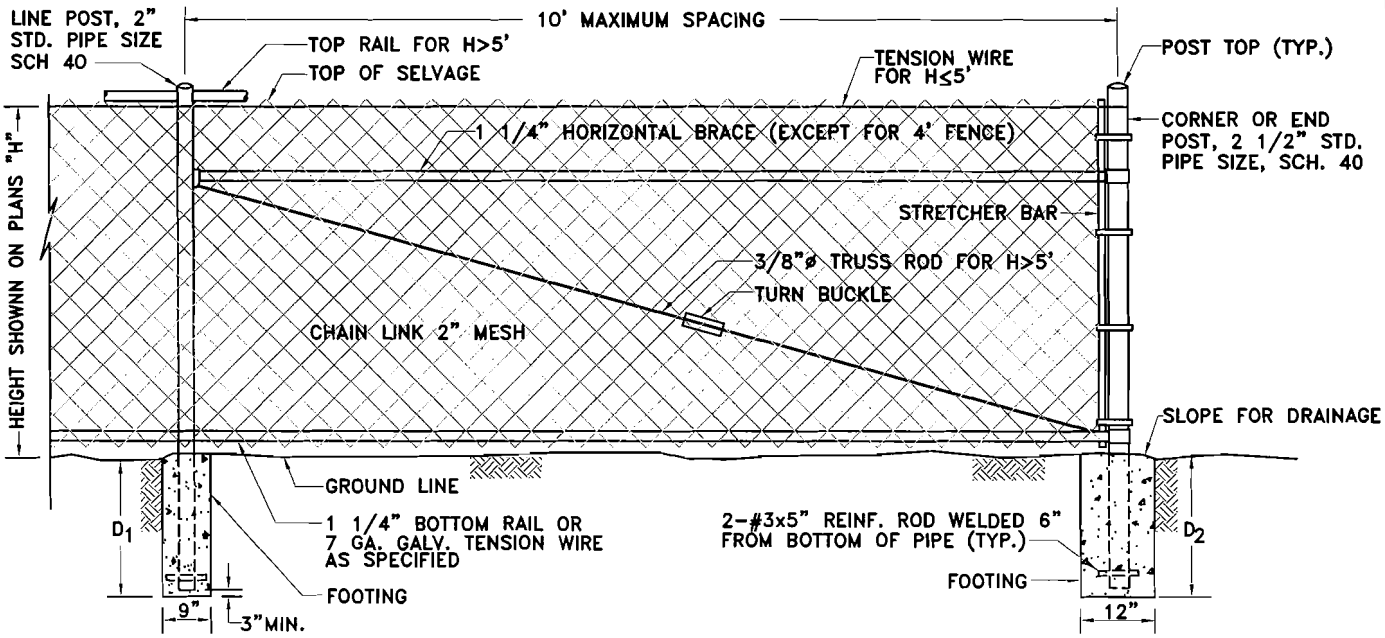

LINE POST

D_1 = 2'-6" FOR H≤4'-0"
= 3'-0" FOR H>4'-0"

CORNER POST

D_2 = 2'-6" FOR H≤4'-0"
= 3'-0" FOR H>4'-0"

TYPICAL ELEVATION

AT CORNER OR END OF FENCE

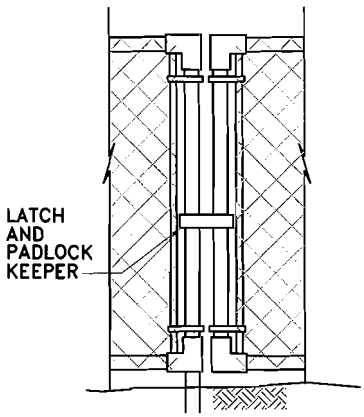

SINGLE SWING GATE
(4' WIDE OR LESS)

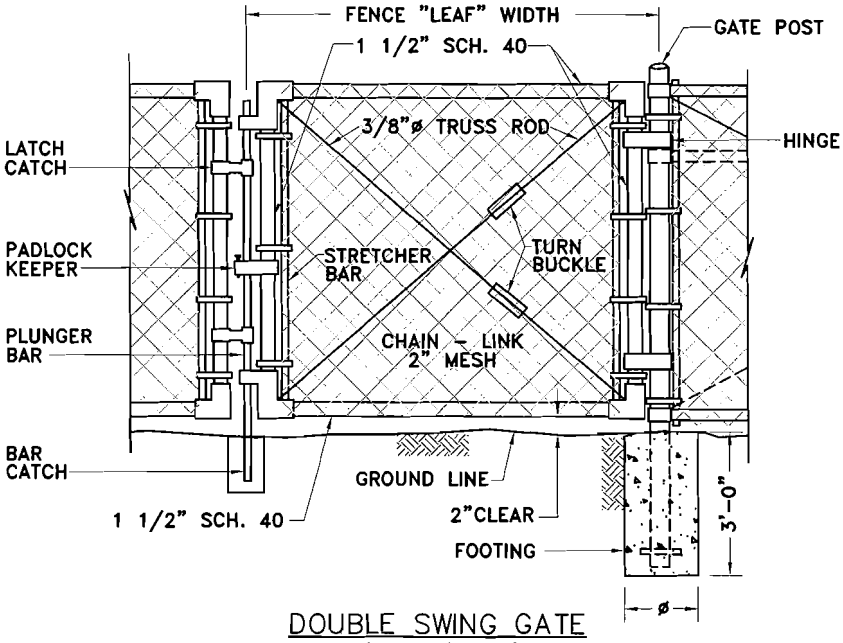

DOUBLE SWING GATE
(OVER 4' WIDE)

GATE POST DESIGN

LEAF WIDTH	POST O.D.	FTG ø
<5'	2-7/8"	9"
6'-10'	4"	12"
≥12'	6-5/8"	18"

GATE DETAILS

(HALF ELEVATIONS)

NOTE: PROVIDE CLASS "B" CONCRETE FOR ALL FOOTINGS

CITY OF DALY CITY, CALIFORNIA — DEPARTMENT OF PUBLIC WORKS

CHAIN LINK FENCE

DRAWN BY : A. TAN

DATE: 6/03

APPROVED BY: MPSharma, CITY ENGINEER

STANDARD DRAWING NO. M-3

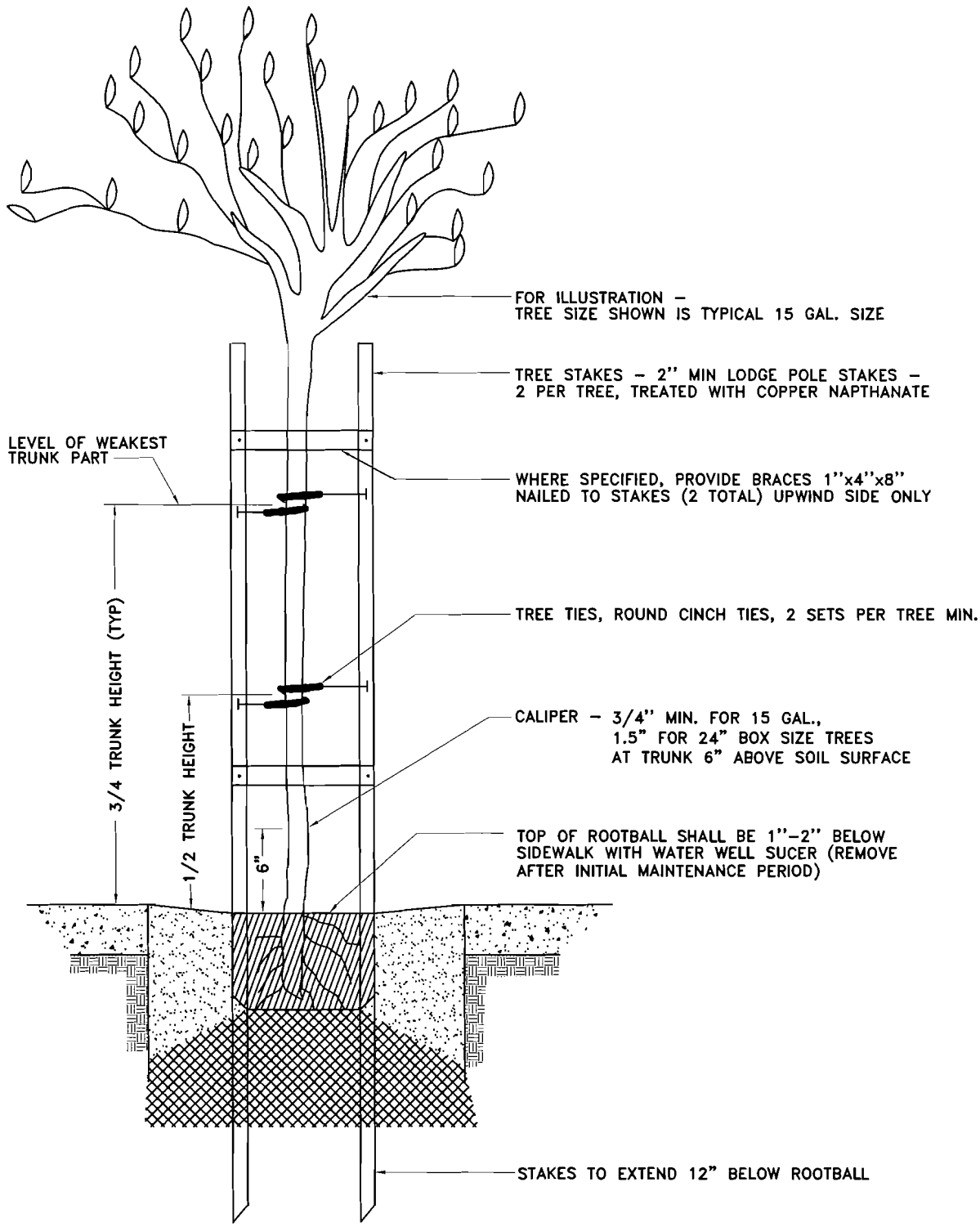

NOTES: SEE STD. DWG PR–2 FOR TREE WELL SIZE.

CITY OF DALY CITY, CALIFORNIA — DEPARTMENT OF PUBLIC WORKS

TREE STAKING

DRAWN BY : A.TAN/AC

DATE: 6/03 APPROVED BY: MP Sharma CITY ENGINEER STANDARD DRAWING NO. PR–1

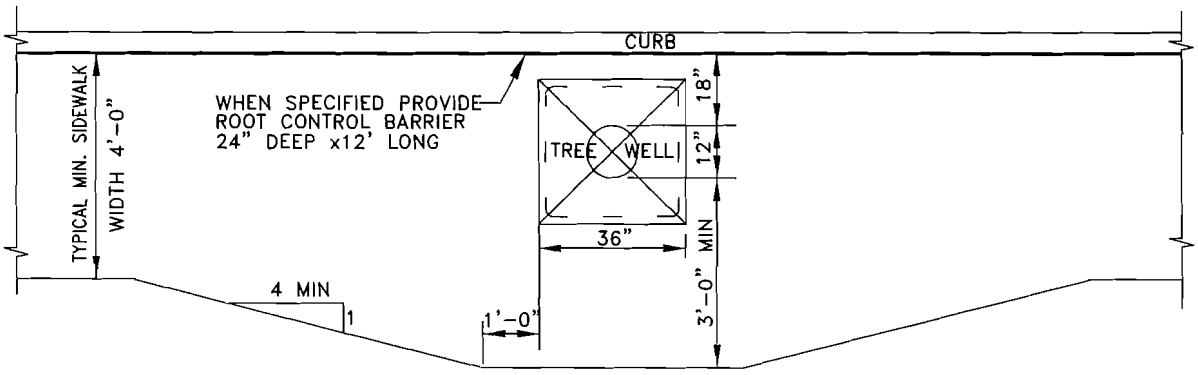

SIDEWALKS LESS THAN 8' WIDE

PLAN

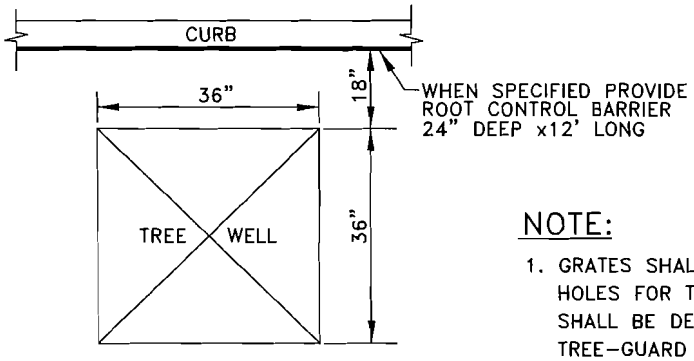

SIDEWALKS 8' WIDE OR WIDER

PLAN

NOTE:

1. GRATES SHALL HAVE PRE-CUT HOLES FOR TREE STAKES AND SHALL BE DESIGNED FOR FUTURE TREE-GUARD ATTACHMENT. WHERE GUARDS ARE SPECIFIED, GRATES SHALL BE ANCHORED TO SIDEWALK.
2. FOR ROOT CONTROL BARRIER REFER TO STD. DWG. PR-3.

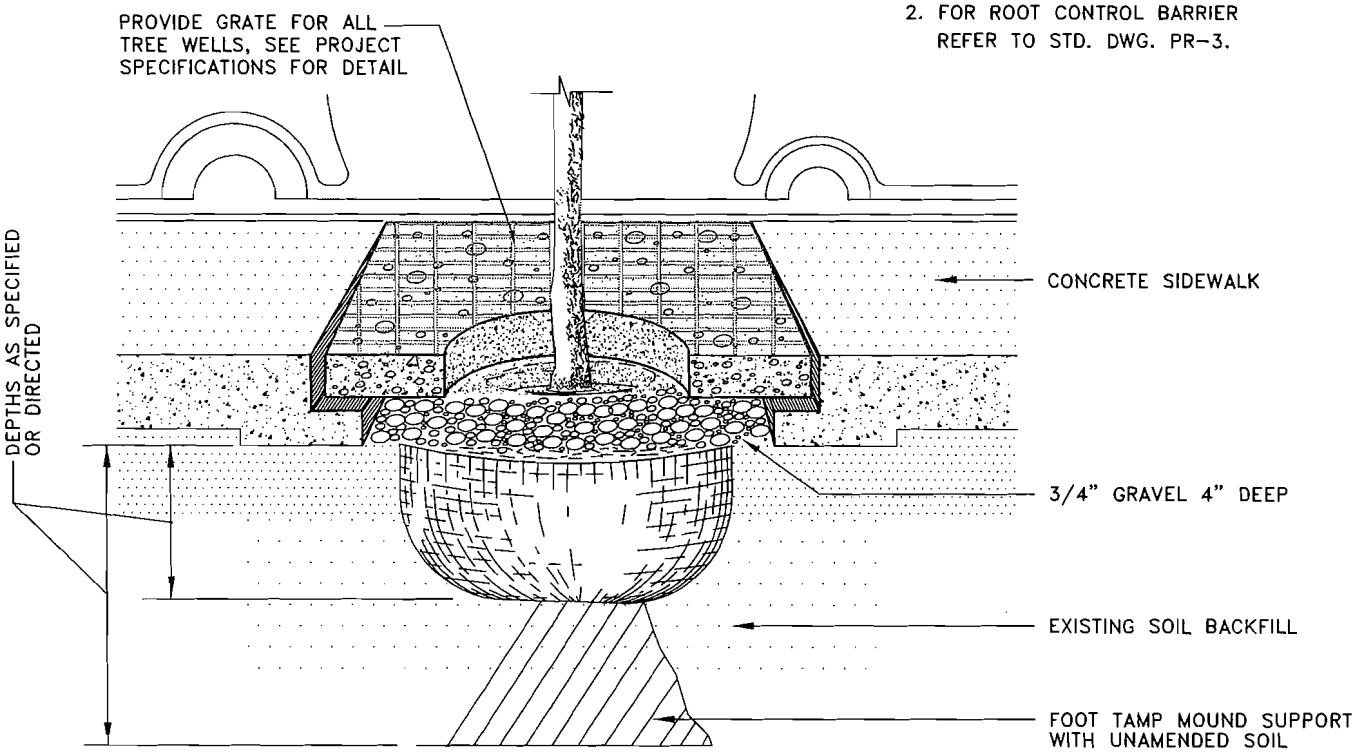

SECTION

CITY OF DALY CITY, CALIFORNIA — DEPARTMENT OF PUBLIC WORKS

TREE WELL

DRAWN BY : A.TAN/AC

DATE: 02/04 APPROVED BY: M.P.Sharma, CITY ENGINEER STANDARD DRAWING NO. PR-2

NOTES:

1. WHEN ROOT PRUNING EXCESSIVELY LARGE ROOT SYSTEMS ALONG SIDEWALK PROVIDE 18" OR 24" BARRIER AS SPECIFIED OR DIRECTED.
2. ALWAYS CONSULT PARKS DEPARTMENT BEFORE ROOT PRUNING.

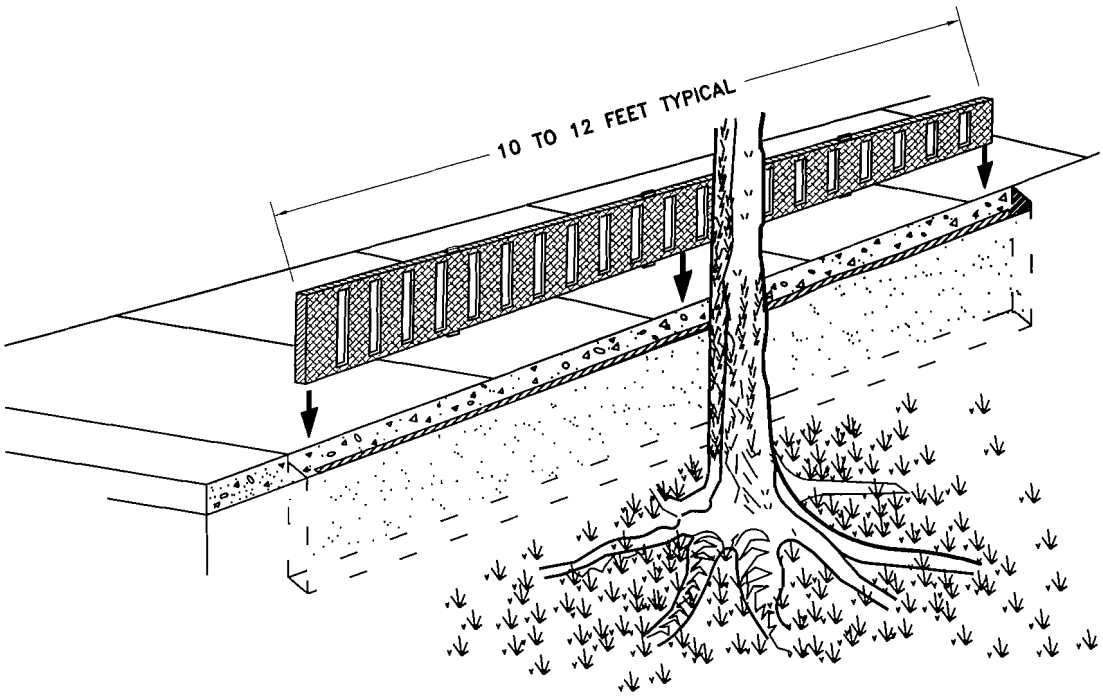

ROOT CONTROL BARRIER INSTALLATION
SIDEWALK APPLICATION
NTS

NOTES:

1. TOP OF ROOT CONTROL BARRIER MUST BE AT GRADE (NEVER BELOW GRADE)
2. POSITION ROOT CONTROL BARRIER AGAINST STRUCTURE OR AS CLOSE TO STRUCTURE AS POSSIBLE
3. DURING CONSTRUCTION THE ROOT CONTROL BARRIER CAN BE PLACED AGAINST THE INSIDE OF THE FORMS.
4. THE RAISED ROOT DEFLECTORS MUST BE FACING TOWARD THE TREE.
5. BARRIER MUST EXTEND AT LEAST 8" BELOW THE BOTTOM OF LANDSCAPE.
6. SEE STD. DWG. PR-4 FOR TYPICAL MATERIAL SPECIFICATION FOR BARRIER.

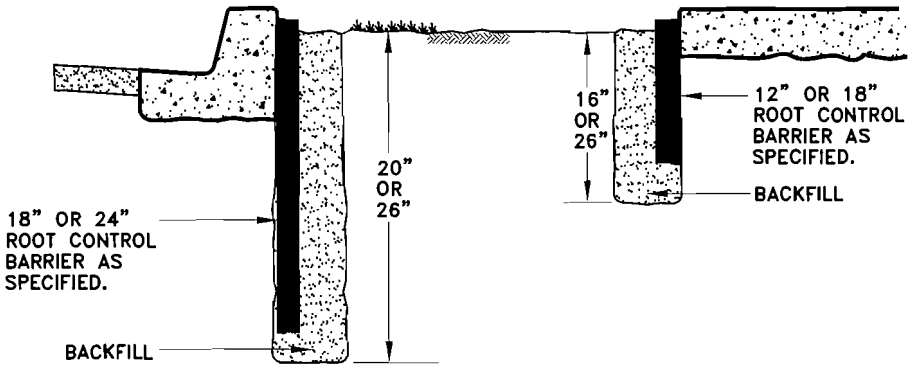

ROOT CONTROL BARRIER PLACEMENT
NTS

CITY OF DALY CITY, CALIFORNIA — DEPARTMENT OF PUBLIC WORKS

DRAWN BY : A. TAN

ROOT CONTROL BARRIER – DETAILS

DATE: 6/03 — APPROVED BY: MP Sharma, CITY ENGINEER — STANDARD DRAWING NO. PR-3

18" AND 24" ROOT CONTROL BARRIER

MATERIAL AND THICKNESS	COPOLYMER POLYPROPYLENE .080 IN. INJECTION MOLDED	
PROPERTIES	ASTM TEST METHOD	VALUE COPOLYMER POLYPROPYLENE
TENSILE STRESS @ YIELD	D638	3800 PSI
ELONGATION @ YIELD	D638	6.3%
FLEXURAL MODULUS	D790B	155.000 PSI
NOTCHED IZOD IMPACT	D256A	7.1
ROCKWELL HARDNESS R. SCALE	D785A	68

36" AND 48" ROOT CONTROL BARRIER

MATERIAL AND THICKNESS	HOMOPOLYMER POLYETHYLENE .080 IN. EXTRUDED	
PROPERTIES	ASTM TEST METHOD	VALUE COPOLYMER POLYPROPYLENE
TENSILE STRESS @ YIELD	D638	3800 PSI
ELONGATION AT BREAK %	D638	10%
TENSILE MODULUS	D638	155,000 PSI
NOTCHED IZOD IMPACT	D256A	0.4–4.0
FLEXUAL MODULUS 73± PSI	D790	145,000 PSI
HARDNESS SHORE	D2240	P66

CITY OF DALY CITY, CALIFORNIA — DEPARTMENT OF PUBLIC WORKS

DRAWN BY : A. TAN

ROOT CONTROL BARRIER TYPICAL SPECIFICATION

DATE: 6/03

APPROVED BY: M P Sharma, CITY ENGINEER

STANDARD DRAWING NO. PR-4

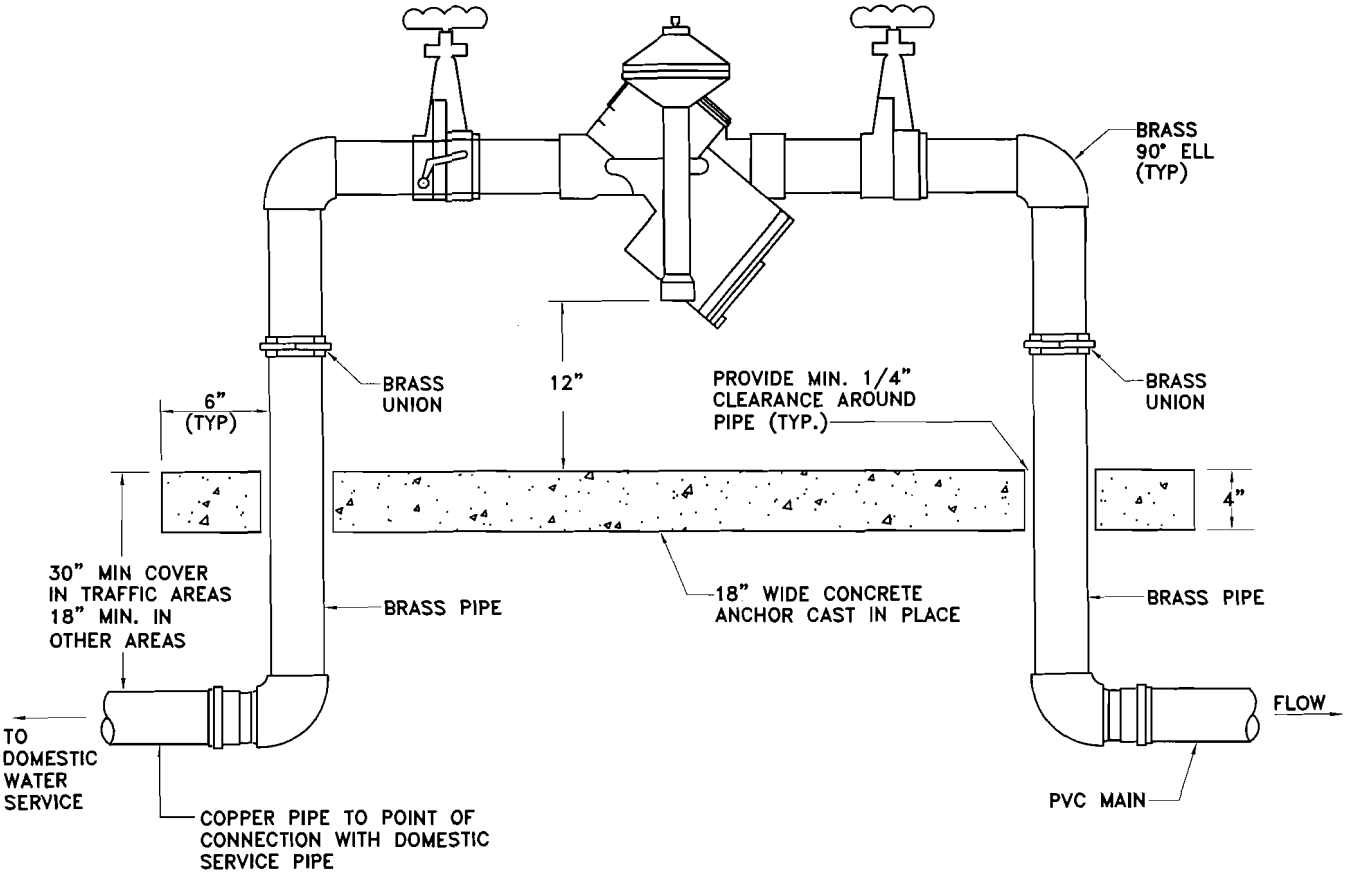

NOTES:

1. BACKFLOW UNITS SHALL BE ON THE "APPROVED BACKFLOW PREVENTION DEVICES" LIST BY THE HEALTH SERVICES AGENCY, A DEPARTMENT OF THE PUBLIC HEALTH AND ENVIRONMENTAL PROTECTION DIVISION OF THE COUNTY OF SAN MATEO.

2. UNIT SHALL BE TESTED AND CERTIFIED BY COUNTY REGISTERED TESTER.

3. DETAILS SHOWN ON THIS PLAN ARE FOR LANDSCAPE IRRIGATION SYSTEMS ONLY. FOR DETAILS OF FIRE AND OTHER BACKFLOW PREVENTION DEVICES, SEE PROJECT PLANS AND SPECIAL PROVISIONS.

CITY OF DALY CITY, CALIFORNIA — DEPARTMENT OF PUBLIC WORKS

DRAWN BY : A. TAN

DATE: 6/03

REDUCED PRESSURE
BACKFLOW PREVENTION DEVICE

APPROVED BY: MP Sharma, CITY ENGINEER

STANDARD DRAWING NO. PR-5

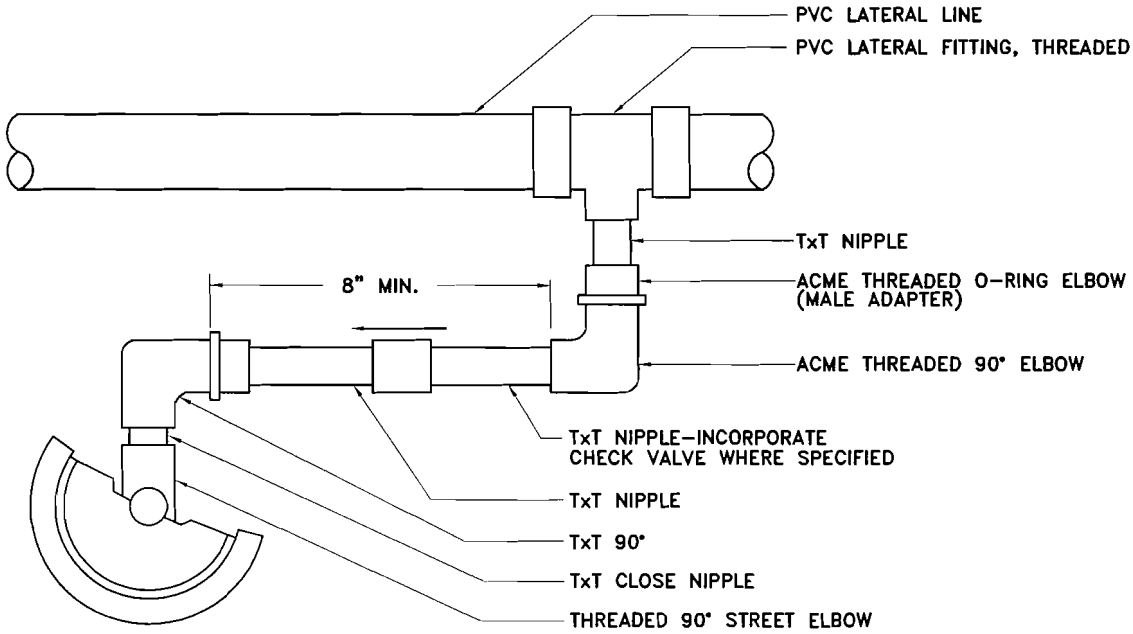

PLAN

LEGEND:

"TxT" – THREADED BOTH ENDS

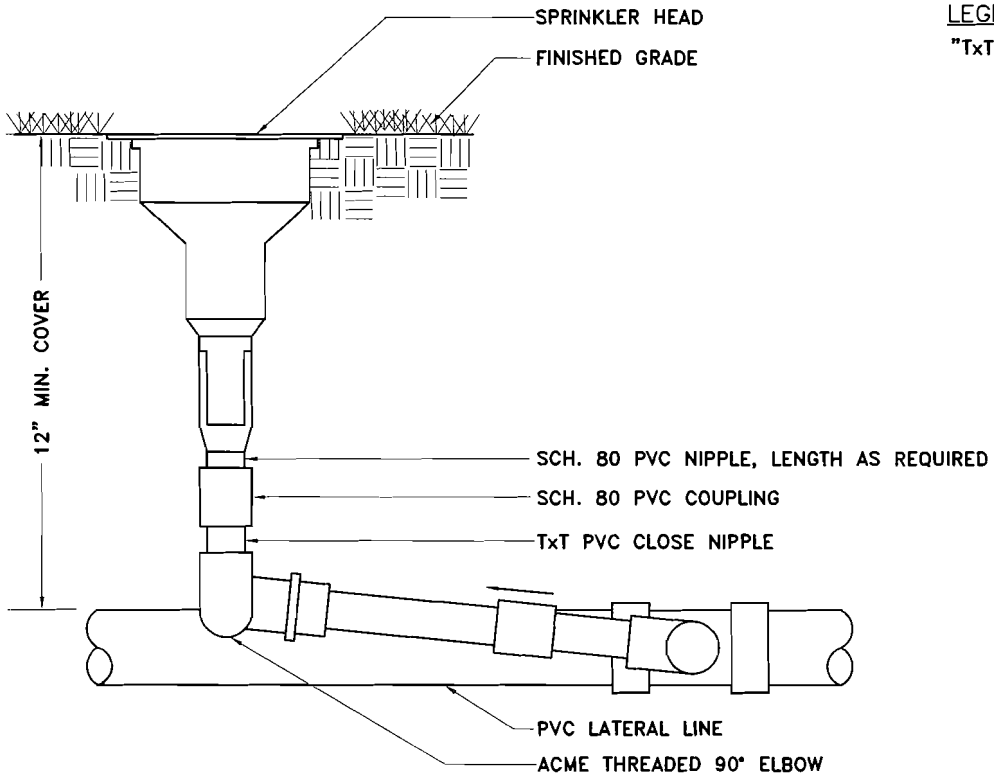

ELEVATION

CITY OF DALY CITY, CALIFORNIA — DEPARTMENT OF PUBLIC WORKS

POP-UP SPRINKLER HEAD INSTALLATION

DRAWN BY : A. TAN

DATE: 6/03

APPROVED BY: MPSharma, CITY ENGINEER

STANDARD DRAWING NO. PR-6

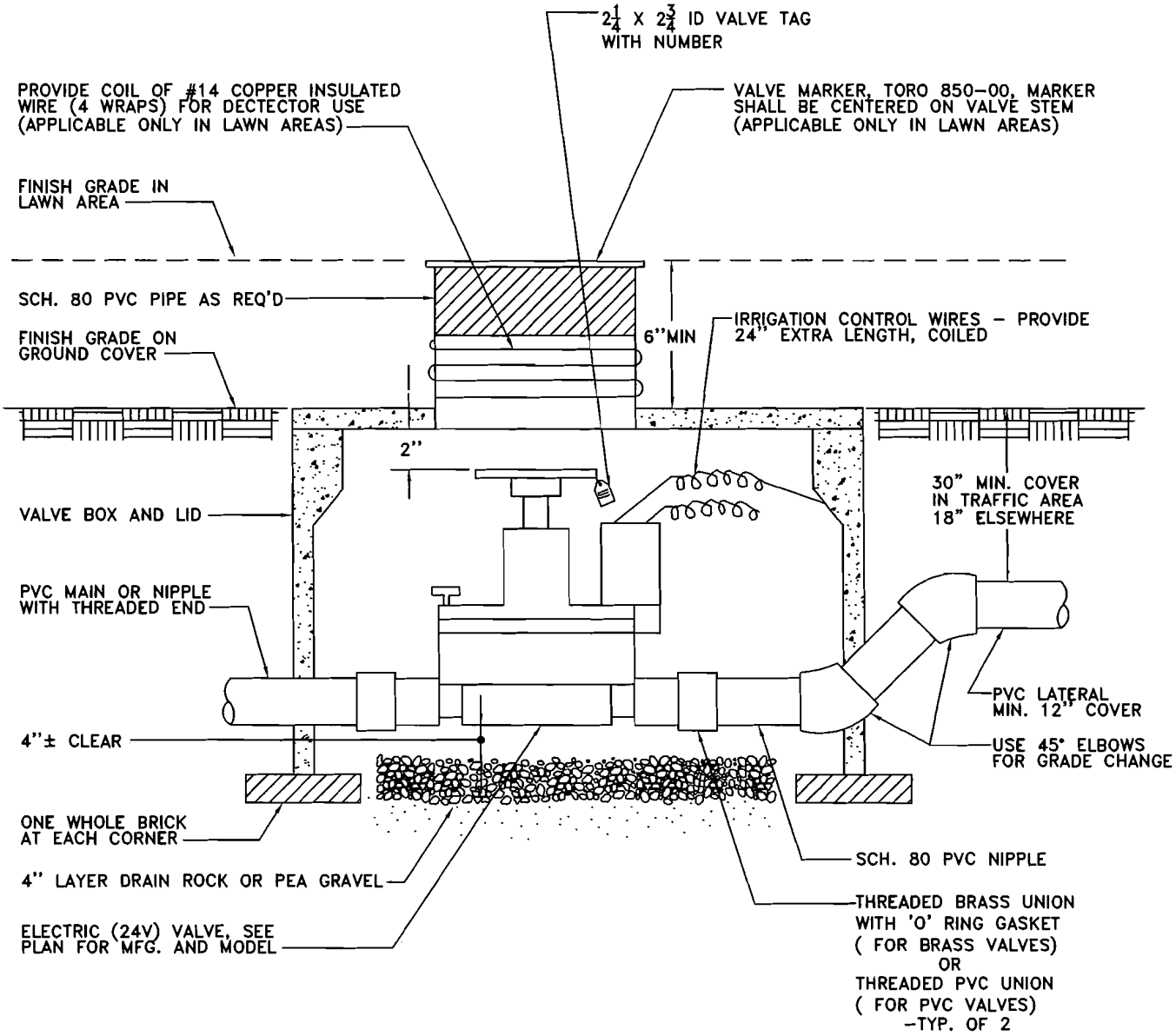

NOTES:

1. INSURE THAT ONLY ONE VALVE IS INSTALLED IN EACH BOX AND NO DEBRIS OR SOIL ARE INSIDE BOX.
2. ALL VALVES SHALL BE EQUIPPED WITH FLOW CONTROL AND WING NUT PET COCK.
3. BOX SHALL NOT REST UPON, OR TOUCH VALVE OR LATERAL AT ANY POINT.
4. 'TEFLON' TAPE SHALL BE PLACED ON ALL THREADED JOINTS (METAL OR PVC).
5. EXCEPT FOR BRASS UNIONS, ALL FITTINGS SHALL BE THREADED PVC SCH. 80.
6. DETAILS SHOWN ON THIS PLAN ARE FOR LANDSCAPE IRRIGATION SYSTEMS ONLY.

CITY OF DALY CITY, CALIFORNIA — DEPARTMENT OF PUBLIC WORKS

REMOTE CONTROL VALVE DETAIL

DRAWN BY : A. TAN

DATE: 02/04 — APPROVED BY: MPSharma, CITY ENGINEER — STANDARD DRAWING NO. PR-7

N:\Staff\Iqbal Singh\STD PLANS -Modifications\PR-7.dwg, 02/02/2004 08:44:32 AM

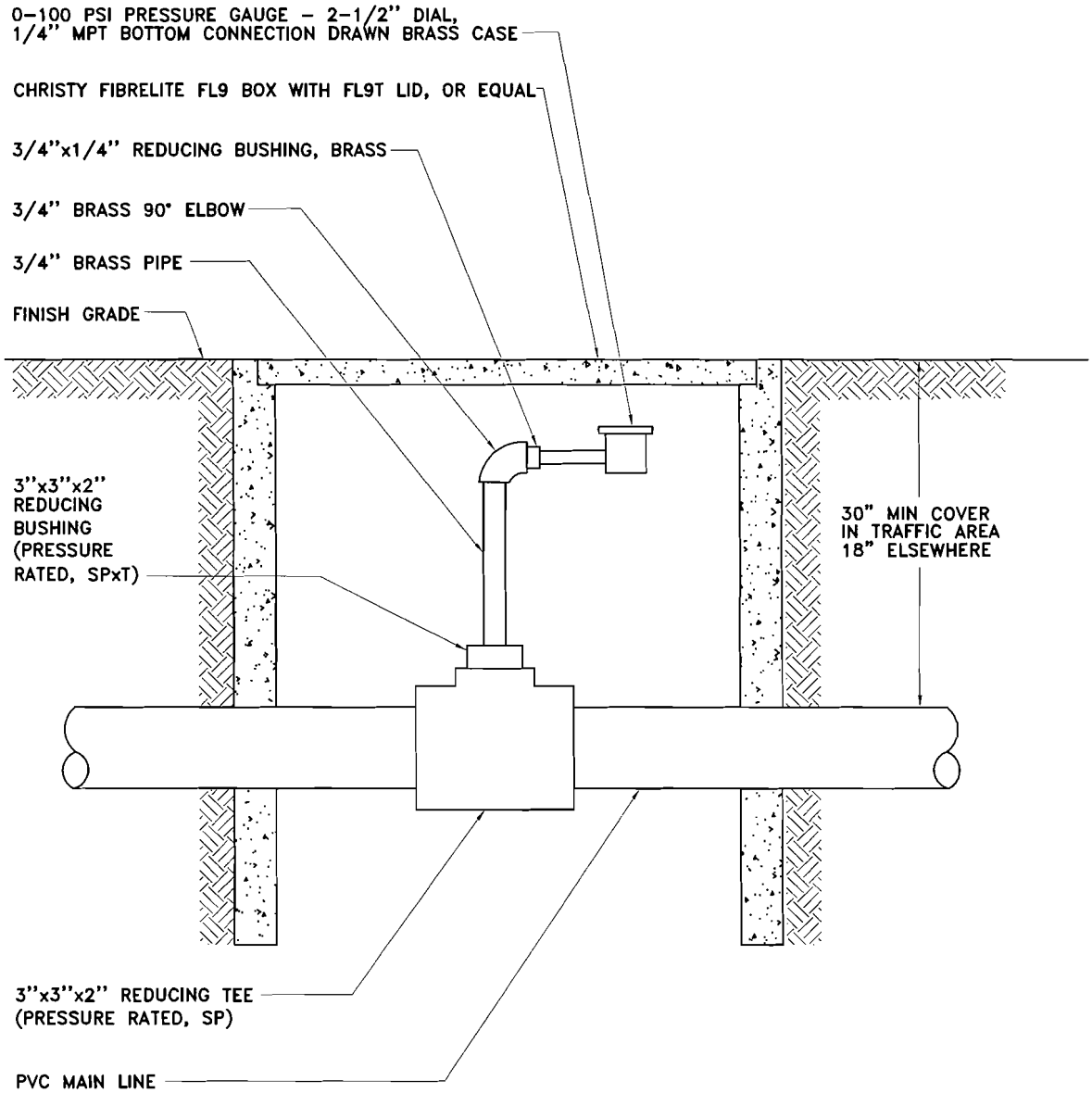

CITY OF DALY CITY, CALIFORNIA — DEPARTMENT OF PUBLIC WORKS

PRESSURE GAUGE DETAIL

DRAWN BY : A. TAN

DATE: 6/03 — APPROVED BY: MPSharma, CITY ENGINEER — STANDARD DRAWING NO. PR-8

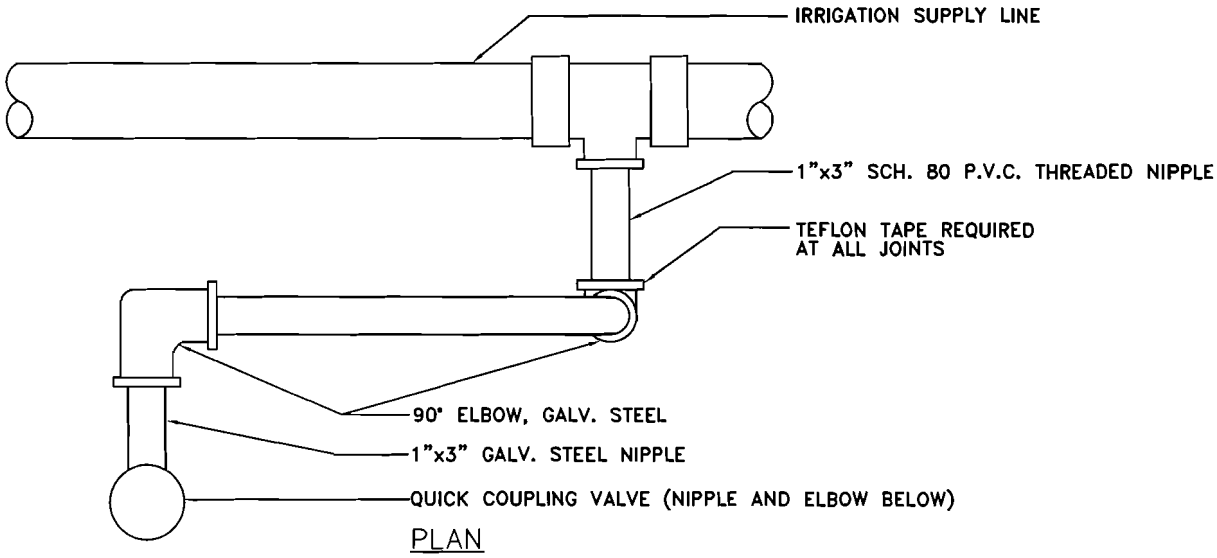

PLAN

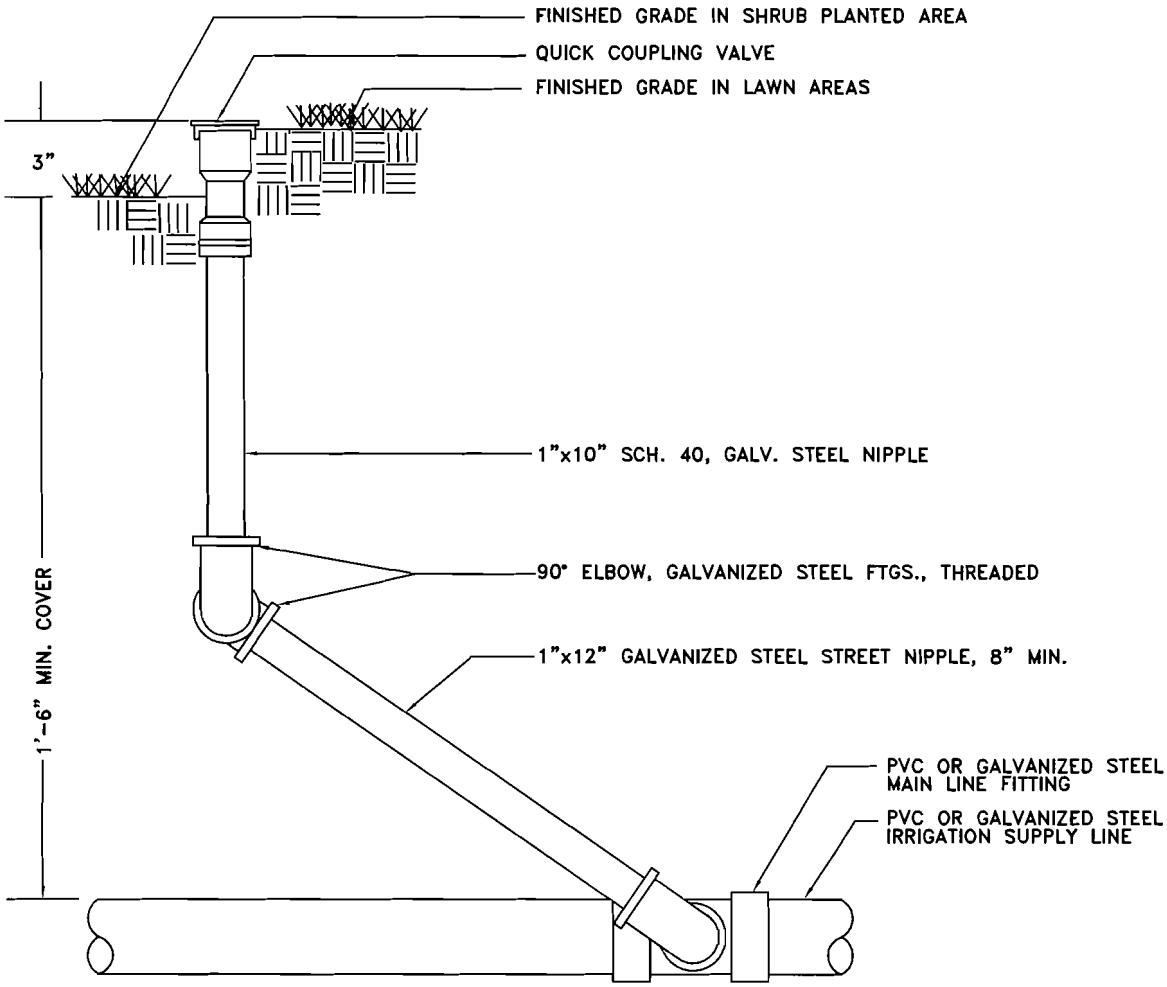

ELEVATION

NOTE: DETAILS SHOWN ON THIS PLAN ARE FOR LANDSCAPE IRRIGATION SYSTEMS ONLY.

CITY OF DALY CITY, CALIFORNIA — DEPARTMENT OF PUBLIC WORKS

QUICK COUPLER INSTALLATION

DRAWN BY : A. TAN

DATE: 6/03

APPROVED BY: MP Sharma, CITY ENGINEER

STANDARD DRAWING NO. PR-9

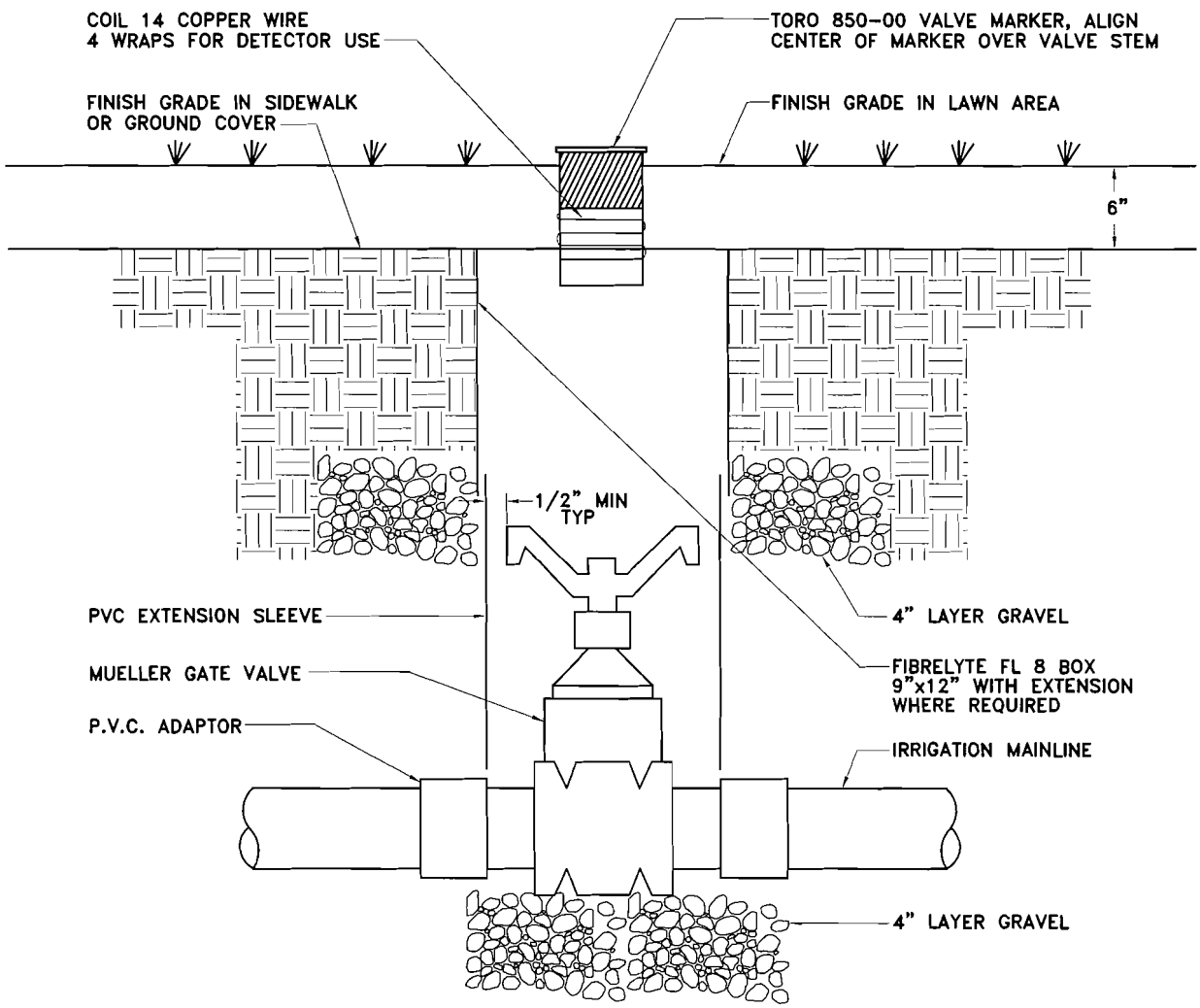

NOTES:

VALVE SHALL NOT BE LESS THAN 12" OR MORE THAN 18" BELOW GRADE.

LID ARE AS FOLLOWS:

1. LAWN AND SIDEWALK AREAS ..... PRECAST CONCRETE, CHRISTY F8D OR EQUAL.

2. STREET AND PARKING LOTS ..... CAST IRON TRAFFIC LID, CHRISTY F8C OR EQUAL.

CITY OF DALY CITY, CALIFORNIA — DEPARTMENT OF PUBLIC WORKS

DRAWN BY : A. TAN

GATE VALVE ASSEMBLY

DATE: 6/03

APPROVED BY: MP Sharma, CITY ENGINEER

STANDARD DRAWING NO. PR-10

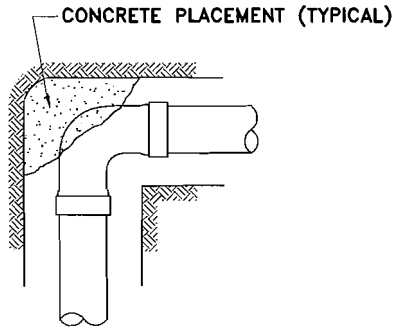

90° ELBOW

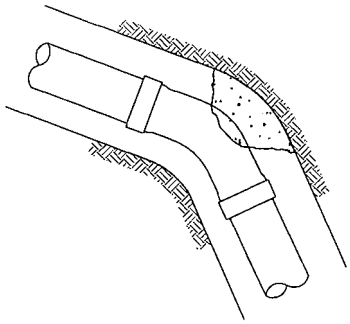

45 ° ELBOW AND 22-1/2° ELLOW

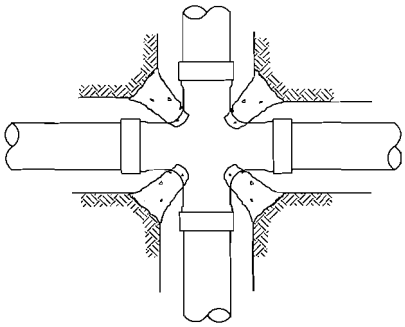

CROSS

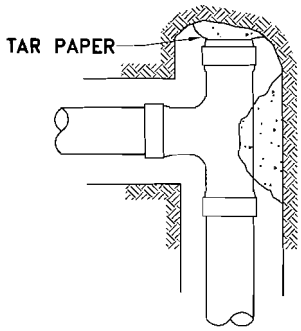

PLUG

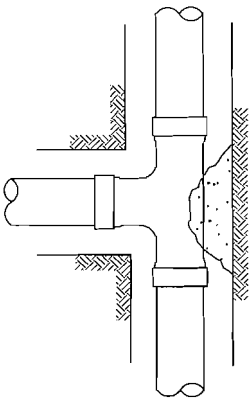

TEE

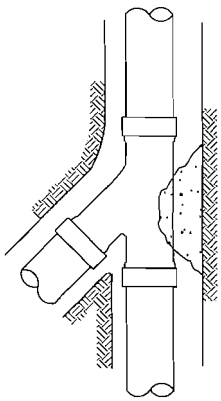

WYE

THRUST BLOCK SCHEDULE						
PIPE SIZE	BEARING AREAS IN SQUARE FEET					
	TEE	PLUG	WYE	90°	45°	22-1/2°
6"	3	3	3	4	2	1
4" OR LESS	1.5	1.5	1.5	2	1.1	0.5

NOTES:

1. THRUST BLOCKS ARE TO BE POURED AGAINST UNDISTURBED SOIL.
2. ALL CONCRETE SHALL BE STATE CLASS 'B' CONTAINING 5 SACK OF CEMENT PER CUBIC YARD.

CITY OF DALY CITY, CALIFORNIA — DEPARTMENT OF PUBLIC WORKS

IRRIGATION THRUST BLOCKS FOR MAIN LINES

DRAWN BY : A. TAN

DATE: 6/03

APPROVED BY: MPSharma , CITY ENGINEER

STANDARD DRAWING NO. PR-11

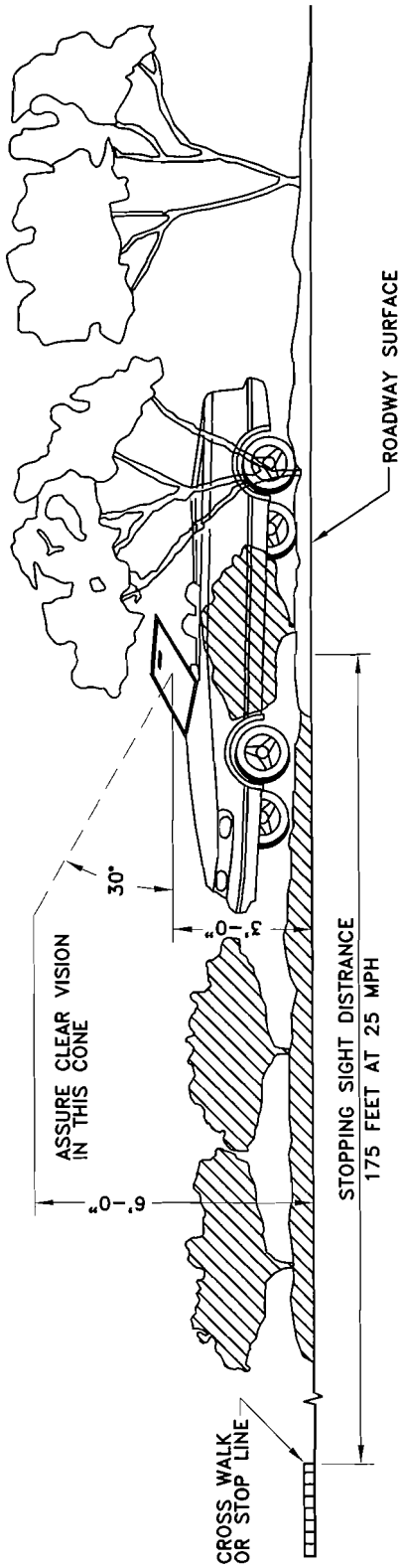

CITY OF DALY CITY, CALIFORNIA

DEPARTMENT OF PUBLIC WORKS

DRAWN BY : A. TAN

MEDIAN PLANTING CLEARANCES

DATE: 6/03

APPROVED BY: MP Sharma , CITY ENGINEER

STANDARD DRAWING NO. PR-12

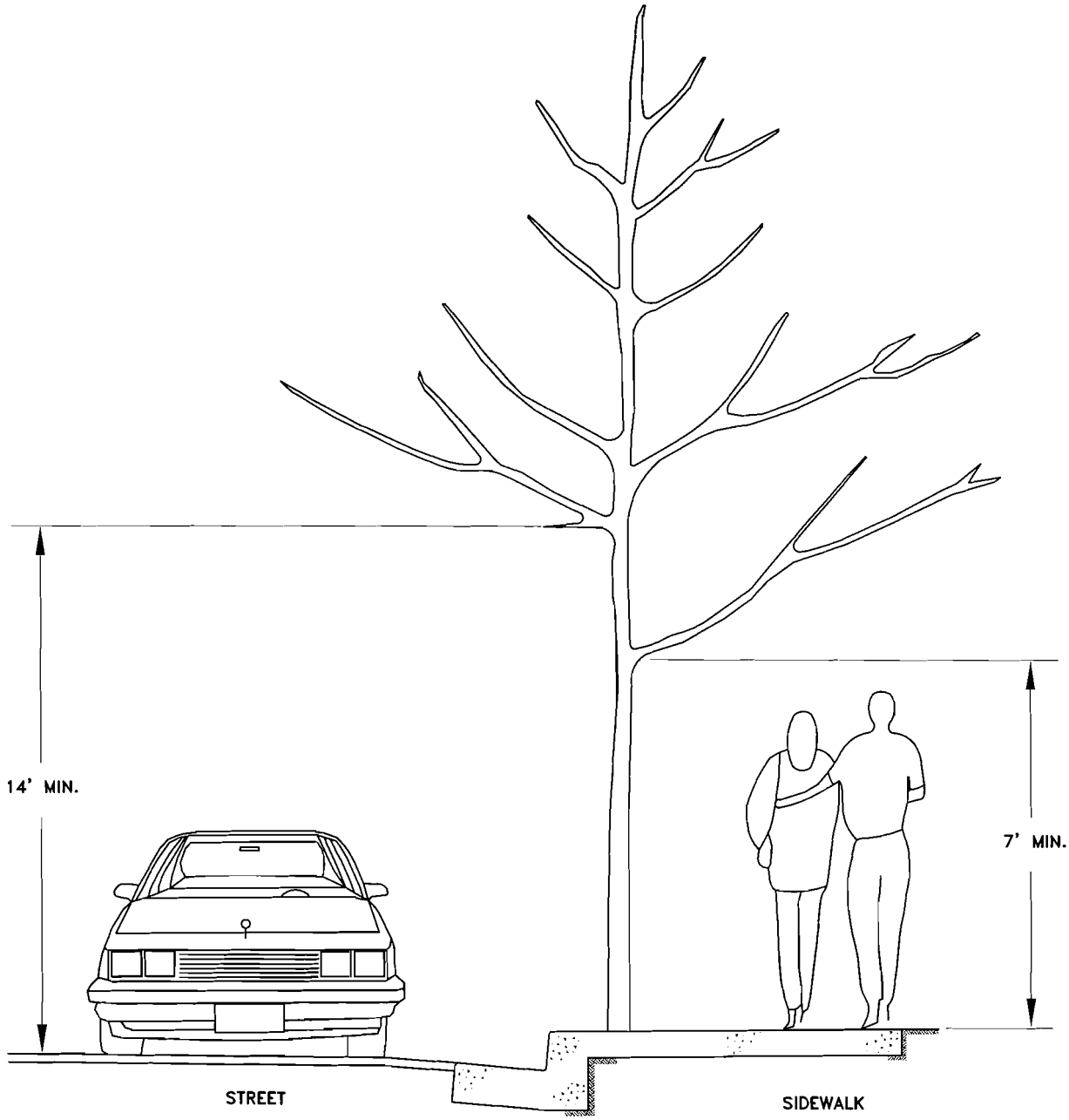

VERTICAL CLEARANCE OF SCAFFOLD BRANCHES

ELEVATION

CITY OF DALY CITY, CALIFORNIA

DEPARTMENT OF PUBLIC WORKS

DRAWN BY : A. TAN

STREET TREE CLEARANCES

DATE: 6/03

APPROVED BY: MP Sharma, CITY ENGINEER

STANDARD DRAWING NO. PR-13

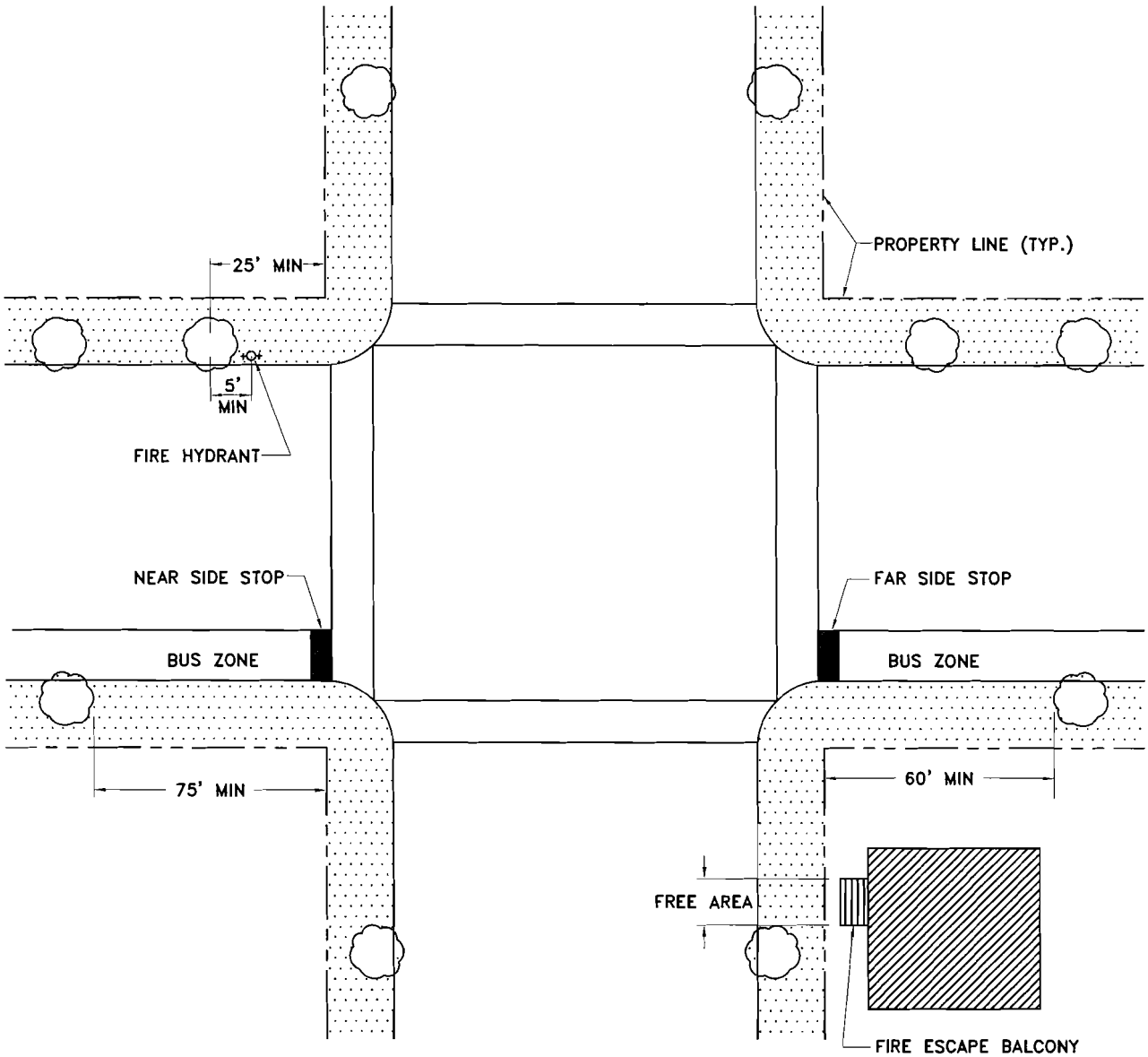

CITY OF DALY CITY, CALIFORNIA

DEPARTMENT OF PUBLIC WORKS

DRAWN BY : A. TAN

SIDEWALK TREE PLACEMENT

DATE: 6/03

APPROVED BY: MPSharma, CITY ENGINEER

STANDARD DRAWING NO. PR-14

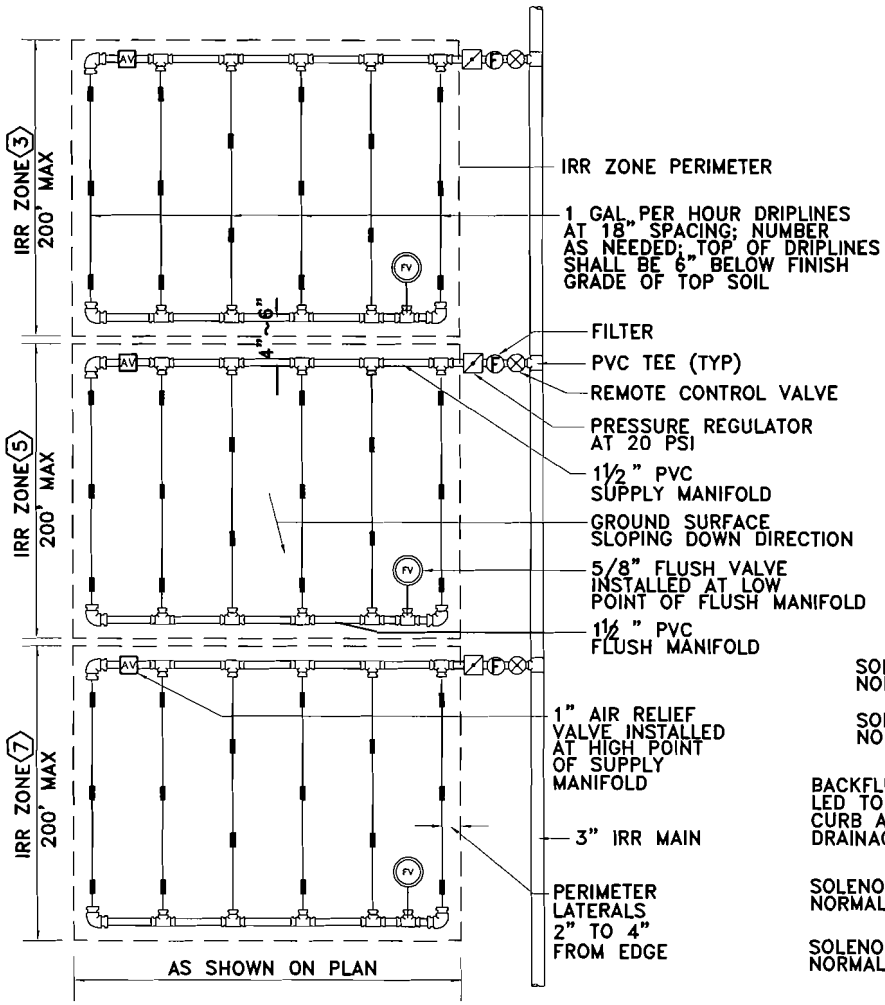

IRRIGATION PIPE SYSTEM DIAGRAM
NO SCALE

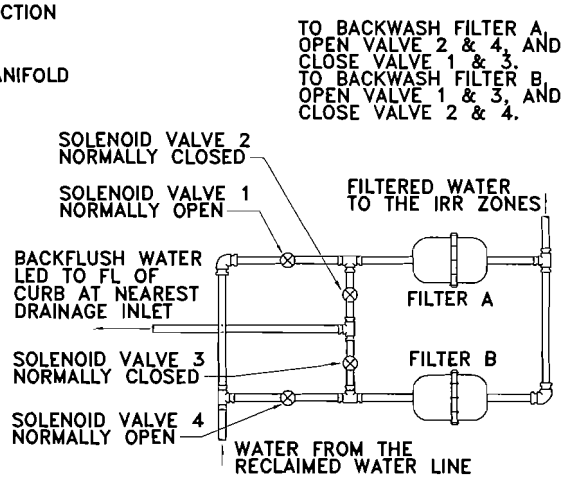

DIAGRAM OF BACKWASH FILTERS
(ALL PIPES & VALVES ARE 3" IN DIA)
NO SCALE

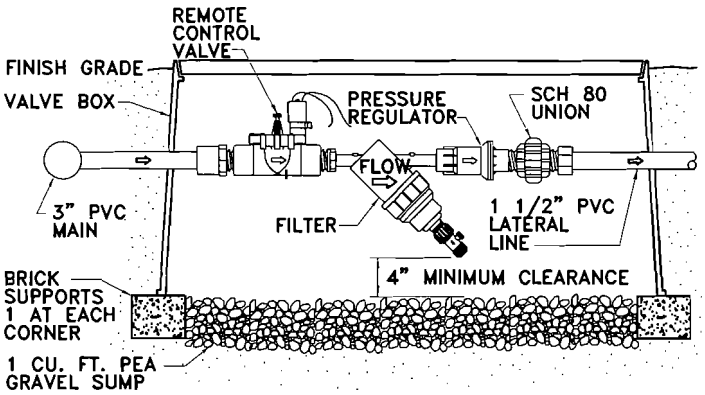

DETAIL A
NO SCALE

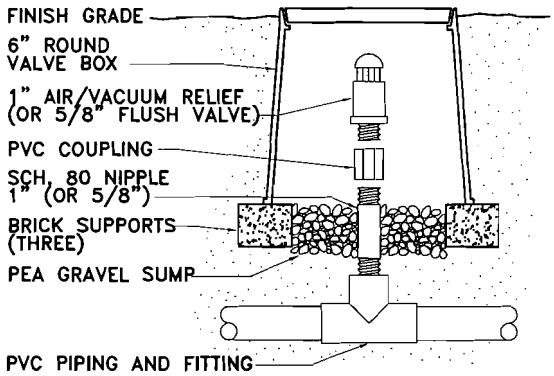

1" AIR/VACCUM RELIEF OR 5/8" FLUSH VALVE
NO SCALE

CITY OF DALY CITY, CALIFORNIA — DEPARTMENT OF PUBLIC WORKS

DRAWN BY : A. TAN

DRIPLINE SUBSURFACE IRRIGATION SYSTEM DETAILS

DATE: 6/03 — APPROVED BY: MP Sharma, CITY ENGINEER — STANDARD DRAWING NO. PR-15

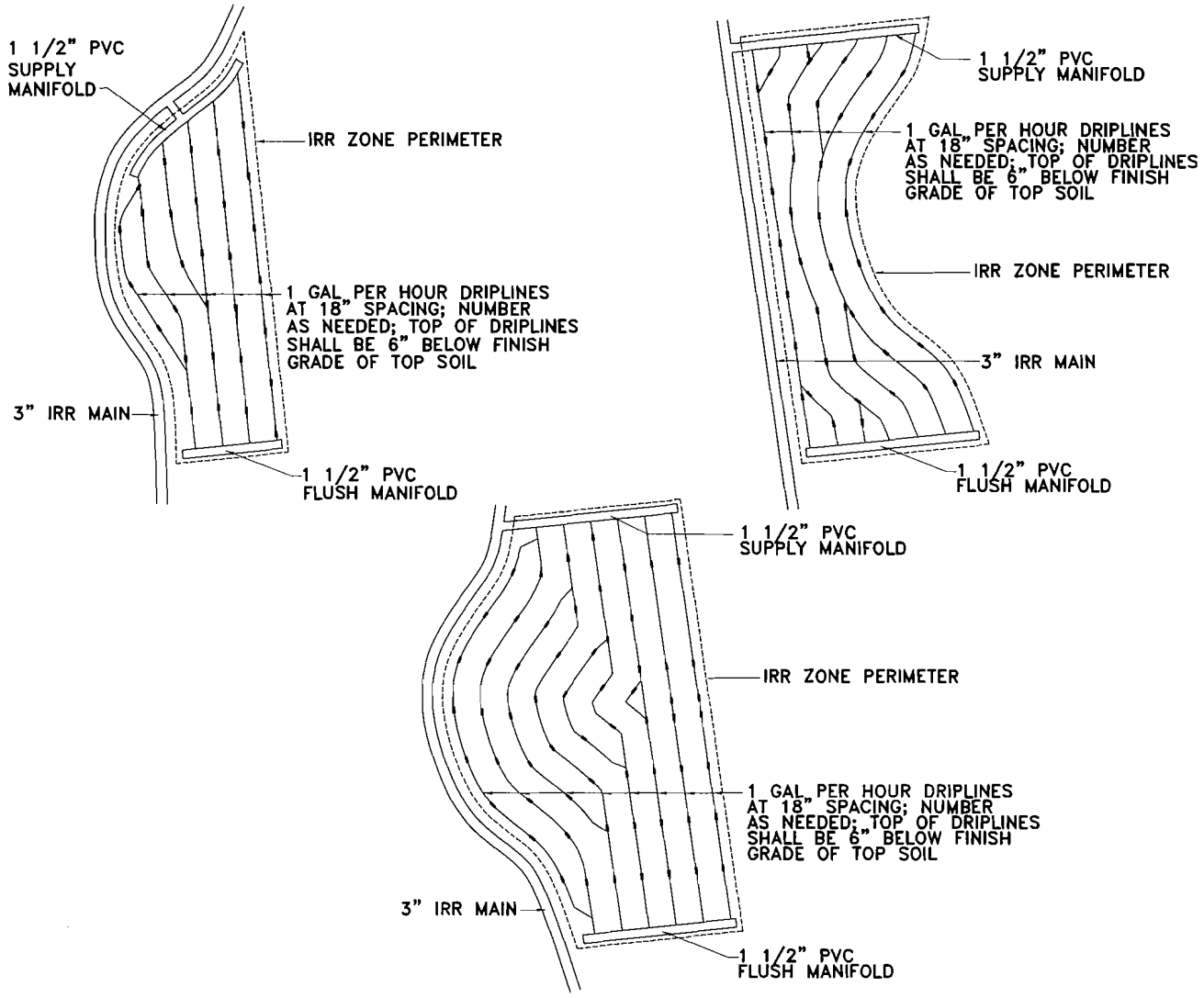

DRIPLINE LAYOUT EXAMPLES FOR IRREGULAR IRRIGATION ZONES

(ALL SOLEINOID VALVES, PRESSURE REGULATORS, AIR RELIEF VALVES AND FLUSH VALVES NOT SHOWN)

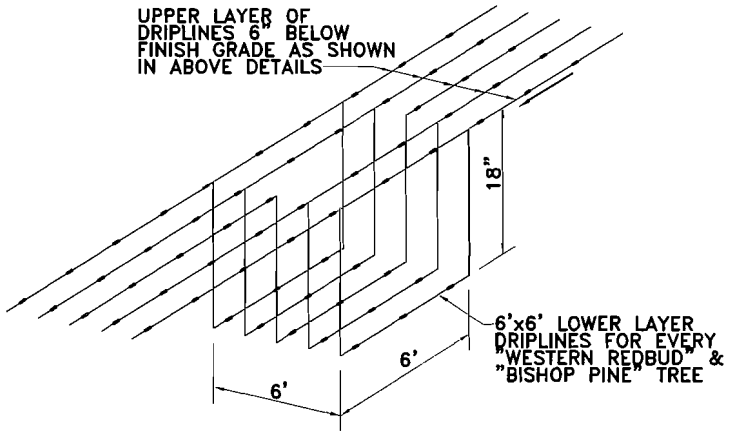

LOWER LAYER DRIPLINE FOR SCHEDULED NEW TREES

CITY OF DALY CITY, CALIFORNIA — DEPARTMENT OF PUBLIC WORKS

TYPICAL DRIPLINE LAYOUTS

DRAWN BY : A. TAN

DATE: 6/03

APPROVED BY: MPSharma, CITY ENGINEER

STANDARD DRAWING NO. PR-16

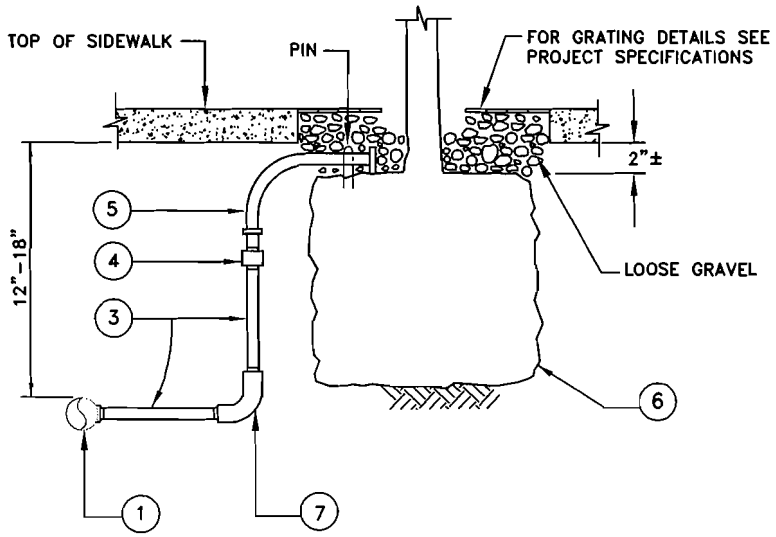

SECTION IN SIDEWALK AREA

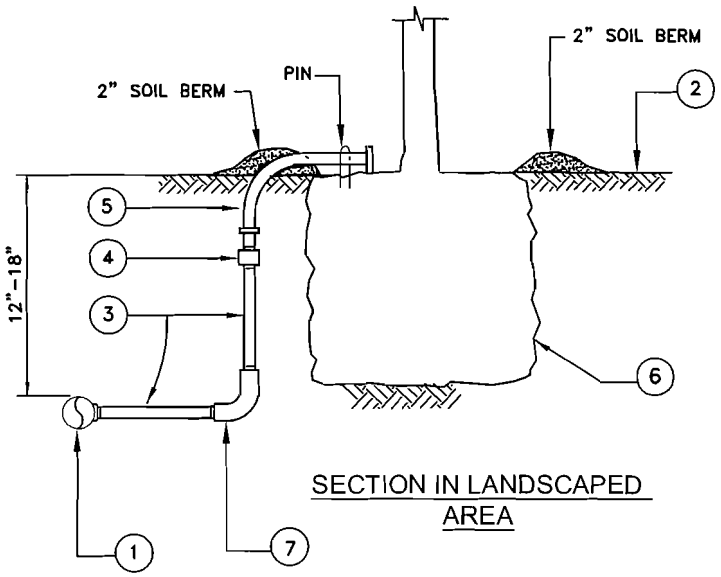

SECTION IN LANDSCAPED AREA

LEGEND:

1. PVC LATERAL LINE WITH SWING JOINT
2. FINISH GRADE
3. SCHEDULE 80 PVC NIPPLE (LENGTH AS REQUIRED)
4. SCHEDULE 80 PVC THREADED COUPLING
5. 1/2" KBI FLEX RISER MODEL FR-500-6 OR EQUAL
6. ROOTBALL
7. SCH. 40 PVC 90° ELL

NOTE:

1. INSTALL TWO BUBBLERS PER TREE ON TOP AND ON OPPOSITE SIDES OF THE ROOTBALL.

CITY OF DALY CITY, CALIFORNIA — DEPARTMENT OF PUBLIC WORKS

SHRUB / TREE BUBBLER

DRAWN BY : acasilla

DATE: 6/03

APPROVED BY: MP Sharma, CITY ENGINEER

STANDARD DRAWING NO. PR-17

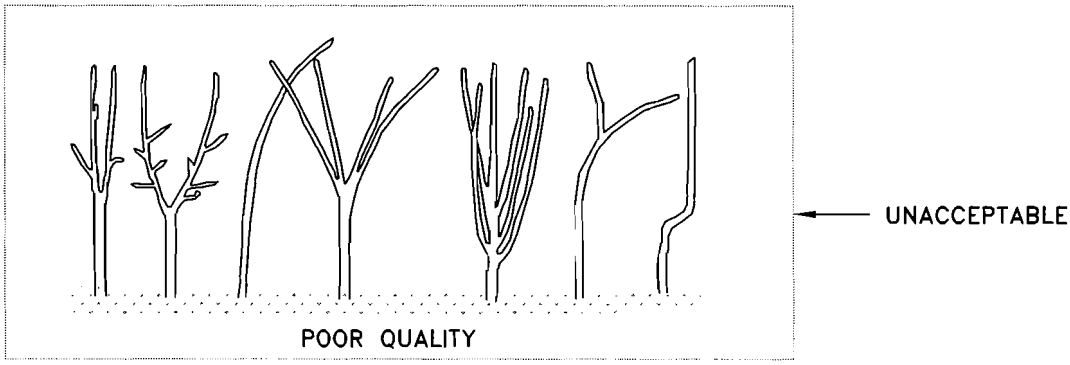

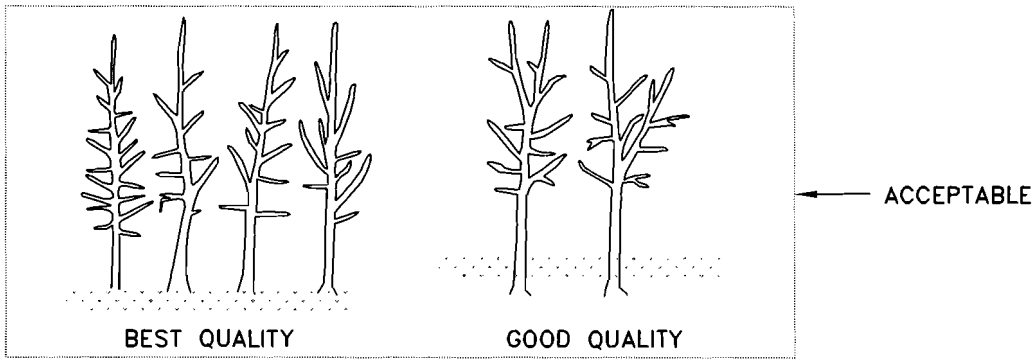

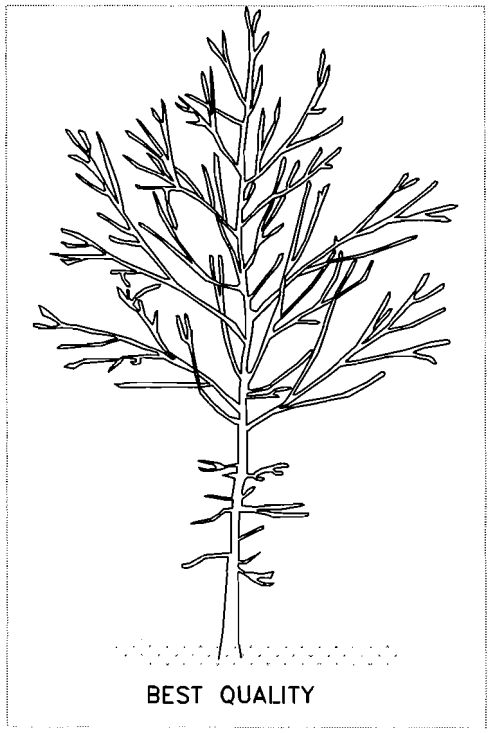

NOTE:

1. TREES ARE DRAWN WITHOUT LEAVES OR SMALL DIAMETER BRANCHES TO SHOW THEIR TRUNK AND BRANCH STRUCTURE ONLY. THE END PORTIONS OF LARGE DIAMETER BRANCHES ARE ALSO CUT OFF TO SAVE SPACE IN THE ILLUSTRATION. THESE DRAWINGS APPLY TO EVERGREENS AS WELL AS DECIDUOUS TREES.

CITY OF DALY CITY, CALIFORNIA — DEPARTMENT OF PUBLIC WORKS

TRUNK AND BRANCH STRUCTURE

DRAWN BY : acasilla

DATE: 6/03

APPROVED BY: M P Sharma, CITY ENGINEER

STANDARD DRAWING NO. PR-18

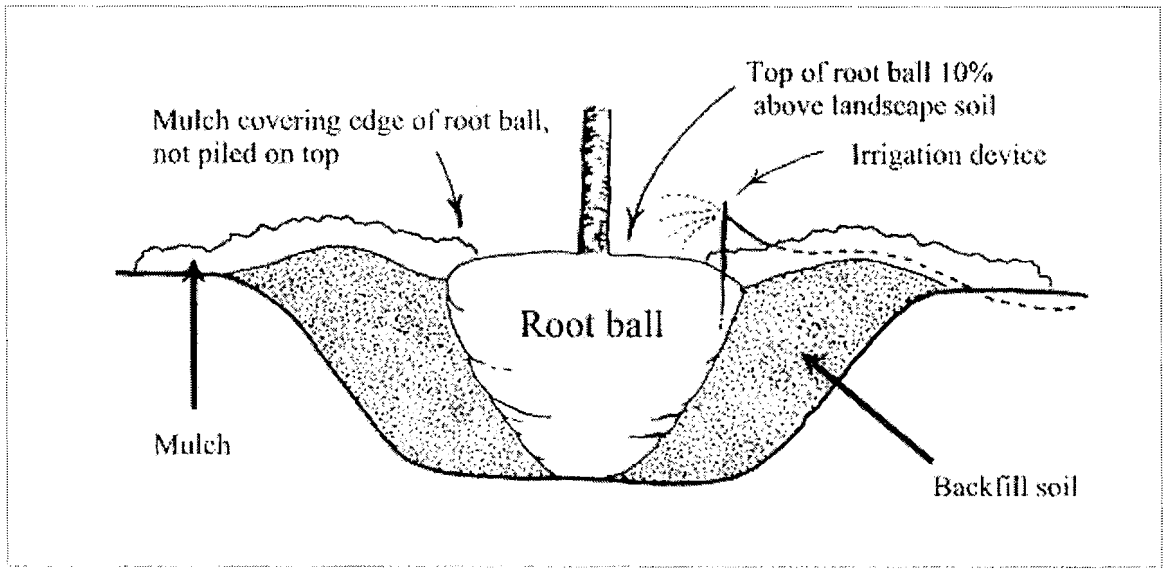

NOTES:

1. KEEP BERM FROM MULCH, FORMED AROUND THE ROOT BALL TO HOLD IRRIGATION, LESS THAN 4" HIGH.
2. WHEN PLANTING ON SLOPES, SET THE TREE SO THE TOP-MOST ROOT IN THE BALL ON THE UPHILL SIDE IS ABOUT EVEN WITH THE SOIL. BRING IN ENOUGH SOIL TO COVER THE SIDES OF THE ROOT BALL WITH SOIL. APPLY MULCH TO FINISH THE PLANTING JOB AS SHOWN.

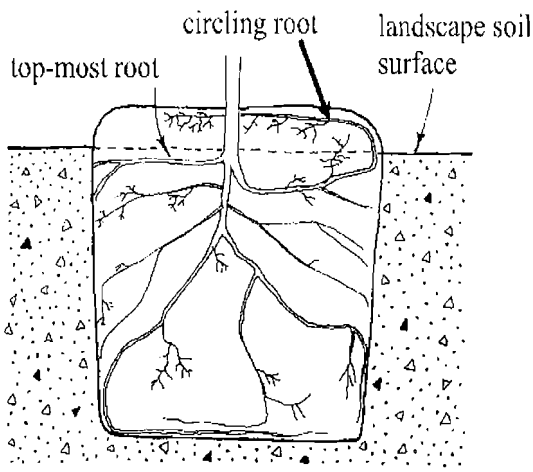

PLANTING TREES TOO DEEP IN CONTAINER

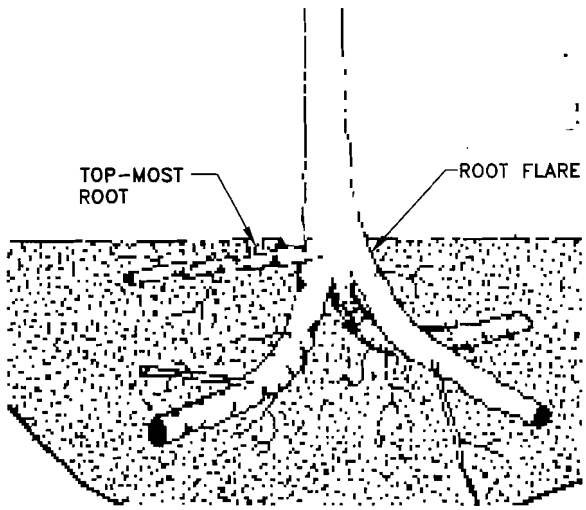

BARE ROOT TREE OR BALL & BURLAP (B&B)

NOTES:

1. REMOVE ALL SOIL AND MEDIA THAT IS ABOVE THE TOP-MOST ROOT IN THE ROOT BALL.
2. CUT OR SPREAD OUT ANY CIRCLING ROOTS GROWING UP INTO THIS MEDIA ON TOP.
3. POSITION THE TOP-MOST ROOT ABOUT EVEN WITH OR SLIGHTLY ABOVE THE TOP OF THE LANDSCAPE SOIL.

CITY OF DALY CITY, CALIFORNIA — DEPARTMENT OF PUBLIC WORKS

TREE PLANTING DETAILS

DRAWN BY : acasilla

DATE: 6/03

APPROVED BY: MPSharma, CITY ENGINEER

STANDARD DRAWING NO. PR-19

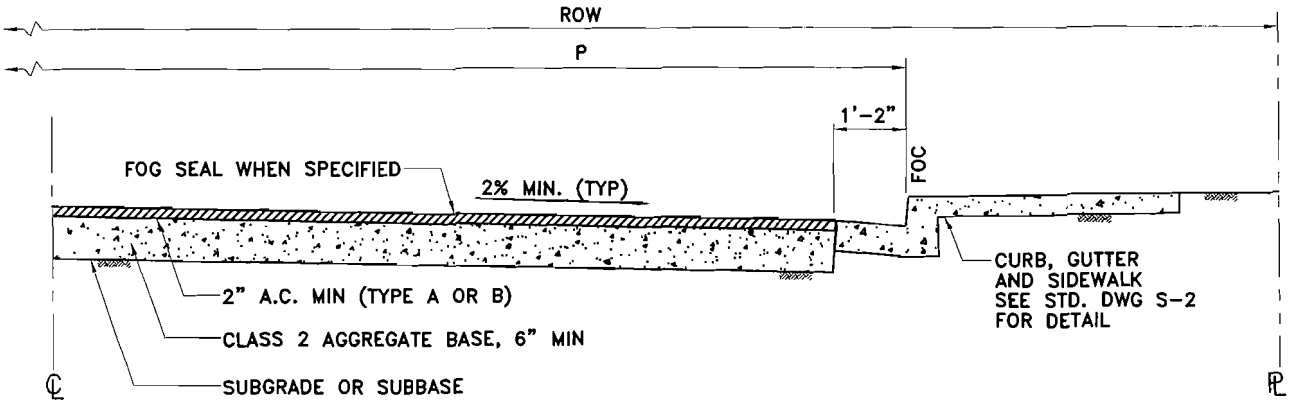

TYPICAL STREET SECTION

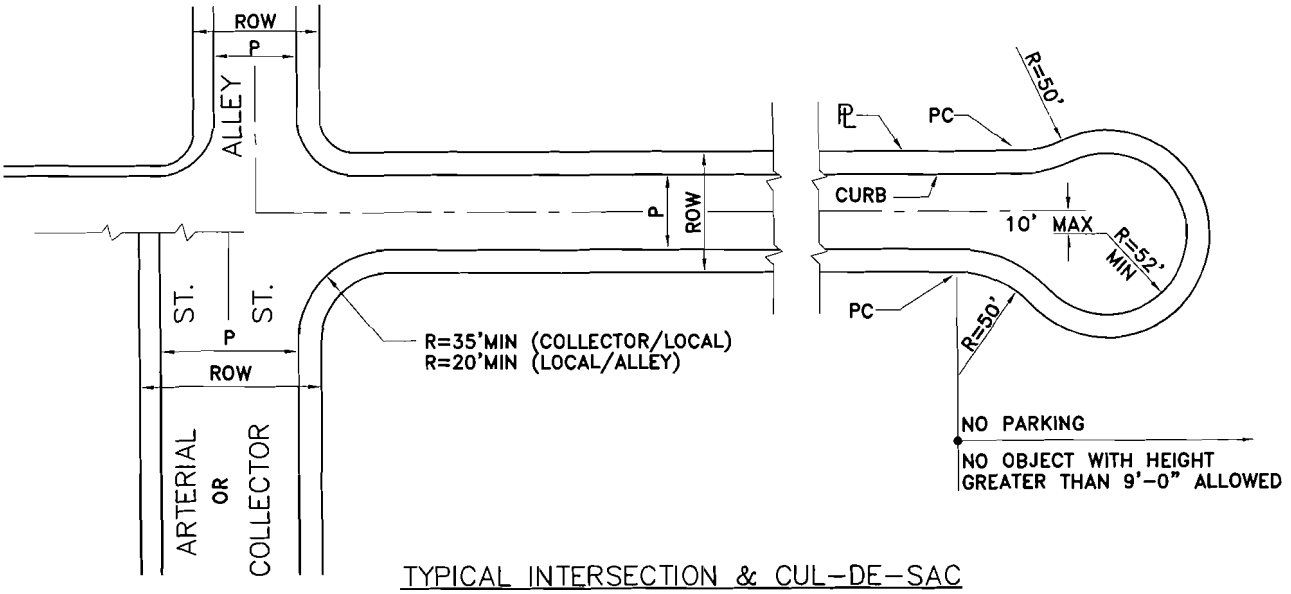

TYPICAL INTERSECTION & CUL-DE-SAC

TYPE OF STREET	ROW	P	℄ RADIUS OF HORIZ. CURVE	DESIGN TRAFFIC INDEX
ARTERIAL	NOTE 1	NOTE 1	NOTE 1	9
COLLECTOR	60.0'	42.0'	400'MIN	7.5
LOCAL	50.0'	36.0'	200'MIN	5.5
ALLEY	25.0'	NOTE 1	NOTE 1	4.5

NOTES:

1. TO MEET DESIGN CONSIDERATIONS, SEE PROJECT SPECIFICATION.
2. IN NO CASE SHALL A LONGITUDINAL STREET GRADE EXCEED 18% NOR BE LESS THAN 0.5%.
3. CURB TO CURB WIDTH "P" FOR LOCAL STREETS MAY BE REDUCED TO 32 FT PROVIDED PARKING IS NOT ALLOWED ALONG ONE SIDE.
4. IF OFFSET PROVIDED, FROM STREET L TO CENTER OF CUL-DE-SAC RADIUS, IT MAY BE EITHER SIDE OF STREET ℄.

CITY OF DALY CITY, CALIFORNIA — DEPARTMENT OF PUBLIC WORKS

STREET DESIGN CRITERIA

TYPICAL SECTION, INTERSECTION & CUL-DE-SAC

DRAWN BY : A. TAN

DATE: 6/03

APPROVED BY: M.P. Sharma, CITY ENGINEER

STANDARD DRAWING NO. S-1

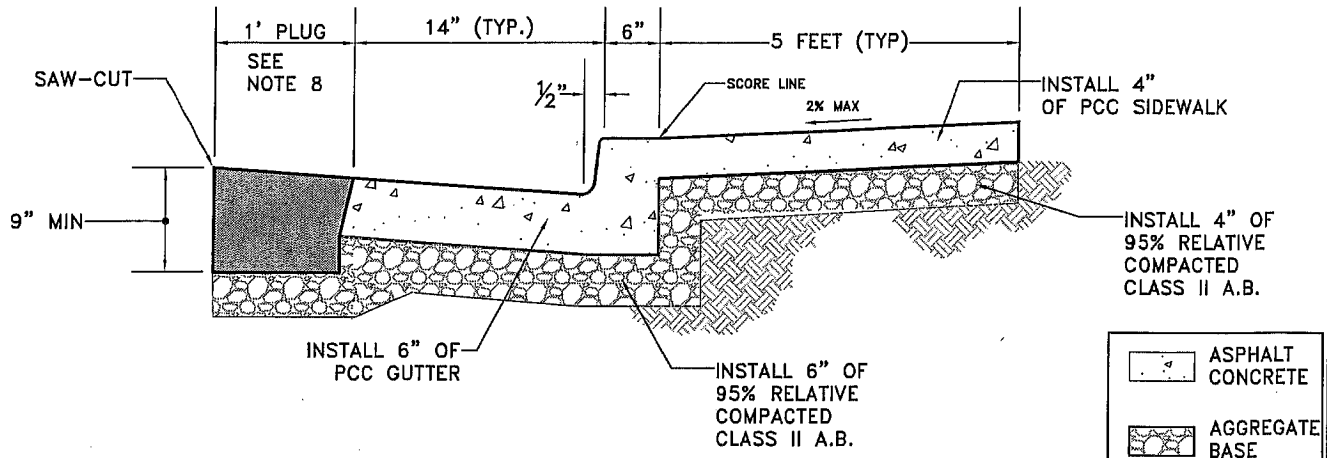

MONOLITHIC CURB, GUTTER & SIDEWALK

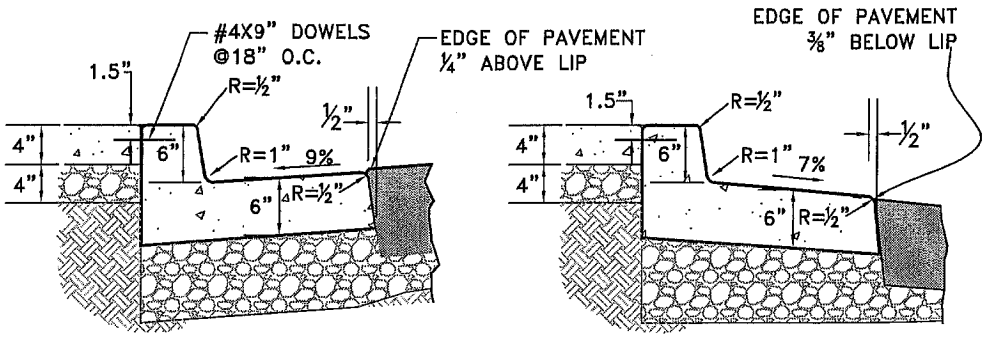

CURB AND GUTTER DETAIL

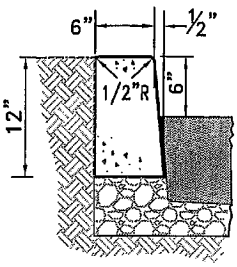

CURB ONLY

NOTE: TO BE USED ON MEDIAN ISLAND CURBS WHERE CROSS SLOPE IS AWAY FROM CURB.

GENERAL NOTES:

1. WHERE A NEW SIDEWALK IS TO BE CONSTRUCTED, THE SIDEWALK SHALL BE EXTENDED UP TO AN ADDITIONAL 35 FEET OR 25%, WHICHEVER IS GREATER TO CONNECT WITH AN EXISTING SIDEWALK.
2. ALL CONCRETE DEMOLITION SHALL BE TO SCORE LINES OR JOINTS. ALL CUTS SHALL BE SAWED NEAT AND STRAIGHT AND SHALL HAVE A MINIMUN DEPTH OF 1-1/2". WATER USED FOR SAWCUTTING OPERATIONS SHALL BE VACUUMED IMMEDIATELY.
3. ALL NEW CONCRETE SHALL BE CLASS A, SIX SACK CEMENT, USING 1-1/2" MAX. SIZE AGGREGATE. ALL NEW CONCRETE SHALL HAVE LAMP BLACK TO MATCH COLOR OF ADJACENT CONCRETE AND FINISHED UNIFORM FINE BROOMED TEXTURE. CURING SHALL BE BY NO-PIGMENTED CURING COMPOUND METHOD.
4. 1/4" DEEP EXPANSION JOINTS SHALL BE PLACED AT 20' INTERVALS, AT CURB RETURNS, AND AT ENDS OF DRIVEWAY APRONS. NEW SIDEWALKS SHALL BE SCORED 4' O.C. BOTH WAYS AND ALONG BACK OF CURB. SIDEWALK REPLACEMENT SHALL BE SCORED TO MATCH CONTIGUOUS EXISTING SIDEWALK AND CURB.
5. IMPRINT A 4-INCH HIGH LETTER "S" ON TOP OF CURB AT SEWER LATERAL CROSSING AND "W" AT WATER LATERAL CROSSING.
6. CONTRACTOR SHALL CALL FOR INSPECTION OF FORMING, POURING AND COMPLETION, GIVING 24-HOURS ADVANCE NOTICE.
7. IF ANY CURB, GUTTER, OR SIDEWALK ARE EXISTING WITHIN 20 FT OF A TREE, DOWEL INTO EXISTING CONCRETE EVERY 18". USE 9" LONG #4 DOWELS, INSERTED MIN. 4" INTO EXISTING CONCRETE.
8. FOR ANY CURB, GUTTER, OR DRIVEWAY REPAIR, SAW-CUT AND REMOVE 1 FEET WIDE SECTION OF AC, MIN. 9" DEPTH. BACKFILL WITH H.M.A., ½" AGGREGATE.

WORK WITHIN CITY RIGHT-OF-WAY REQUIRES ENCROACHMENT PERMIT FROM CITY'S ENGINEERING DIVISION

CITY OF DALY CITY, CALIFORNIA — DEPARTMENT OF PUBLIC WORKS

CURB, GUTTER & SIDEWALK

DRAWN BY : I. SINGH

DATE: 03/15

APPROVED BY: Ramon M. Lowe, CITY ENGINEER

STANDARD DRAWING NO. S-2

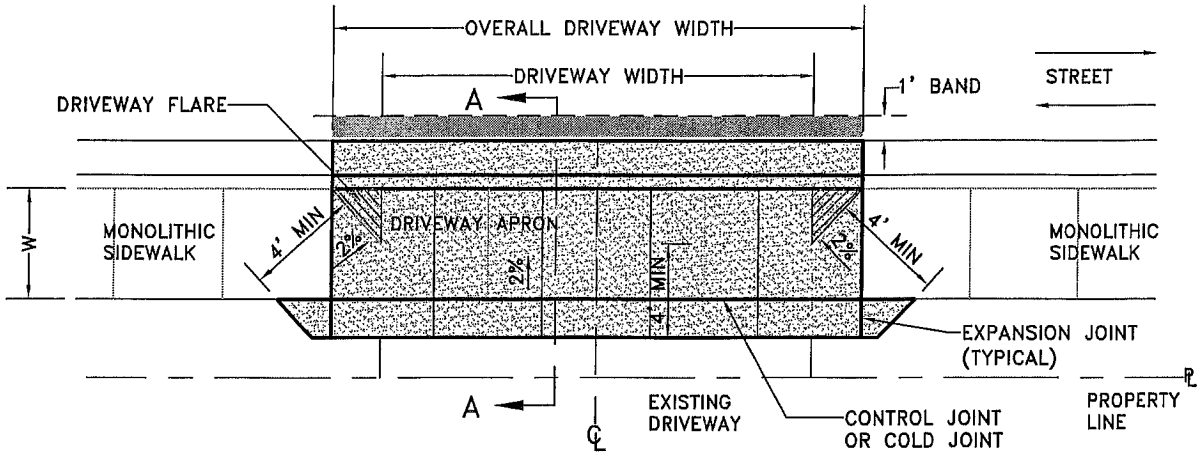

PLAN

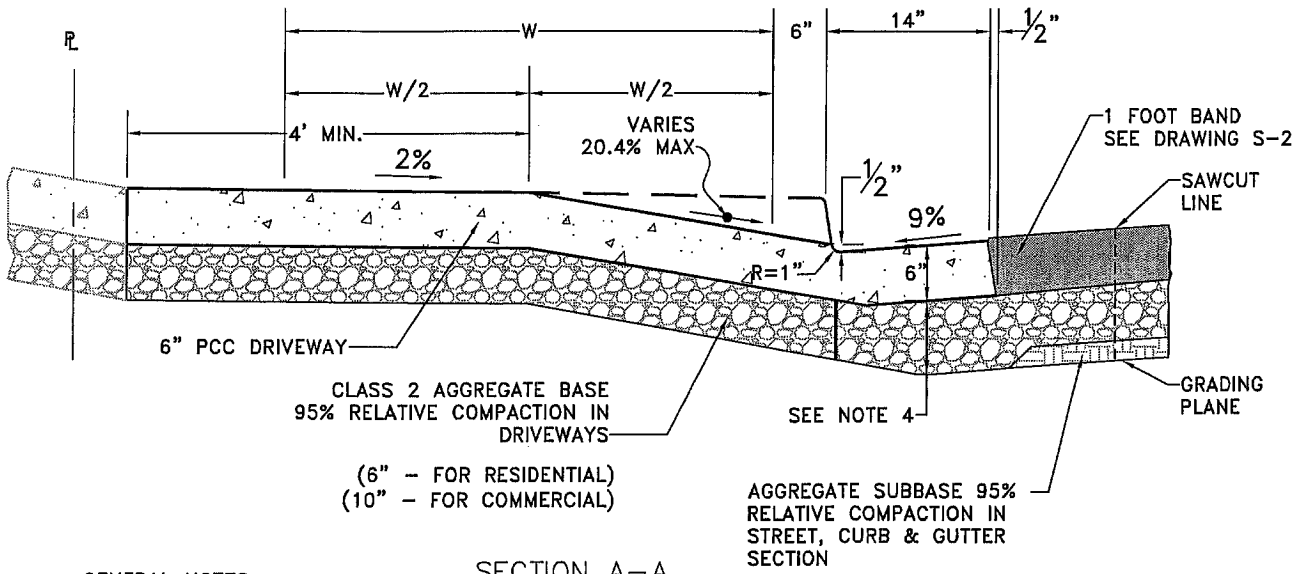

SECTION A–A

GENERAL NOTES

1. DRIVEWAY WIDTH SHOULD BE:

   RESIDENTIAL: 8'– FOR ONE CAR GARAGE
   14'– FOR TWO CAR GARAGE

   COMMERCIAL: 8'– 30'

2. DRIVEWAY FLARE WIDTH: 1.5' FOR RESIDENTIAL
   3.0' FOR COMMERCIAL & INDUSTRIAL OR OTHERWISE NOTED
3. W=WIDTH OF ADJACENT MONOLITHIC SIDEWALK
4. THICKNESS OF AGGREGATE BASE UNDER CURB & GUTTER SHALL BE:
   FOR NEW STREET SECTION : AS DETERMINED BY EXTENSION OF THE ROADWAY GRADING PLANE
   FOR EXISTING STREET SECTION : 6" MIN.
5. ALL NEW CONCRETE SHALL BE CLASS A, SIX SACK CEMENT, USING 1–1/2" MAX. SIZE AGGREGATE. ALL NEW CONCRETE SHALL HAVE LAMP BLACK TO MATCH COLOR OF ADJACENT CONCRETE AND FINISHED UNIFORM FINE BROOMED TEXTURE. CURING SHALL BE BY NO–PIGMENTED CURING COMPOUND METHOD.
6. DRIVEWAY AND CURB SHALL BE SCORED WHEN APPLICABLE IN THE SAME MANNER AS ADJACENT SIDEWALKS AND CURBS.
7. ALL CONCRETE DEMOLITION SHALL BE TO SCORE LINES OR JOINTS. ALL CUTS SHALL BE SAWED NEAT AND STRAIGHT AND SHALL HAVE A MINIMUM DEPTH OF 1–1/2". WATER USED FOR SAWCUTTING OPERATIONS SHALL BE VACUUMED IMMEDIATELY.

WORK WITHIN CITY RIGHT–OF–WAY REQUIRES ENCROACHMENT PERMIT FROM CITY'S ENGINEERING DIVISION

CITY OF DALY CITY, CALIFORNIA — DEPARTMENT OF PUBLIC WORKS

DRIVEWAY – RESIDENTIAL / COMMERCIAL

DRAWN BY : I. SINGH

DATE: 03/15

APPROVED BY: Ramon Molina, CITY ENGINEER

STANDARD DRAWING NO. S–3

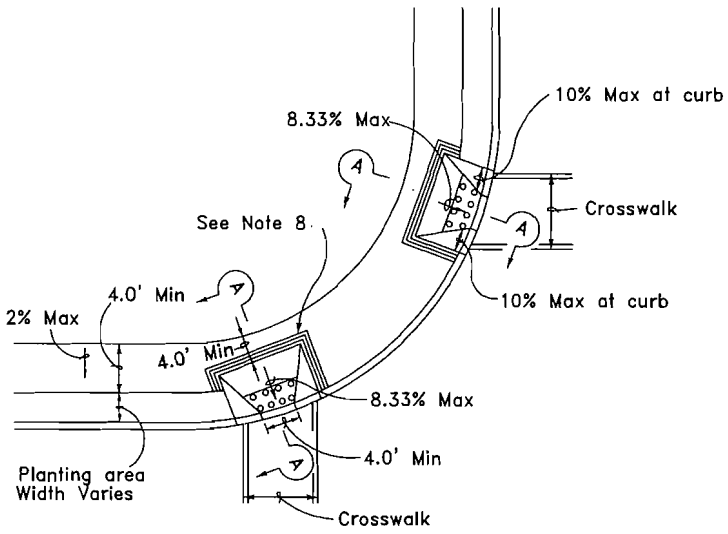

CASE A

See Note 9

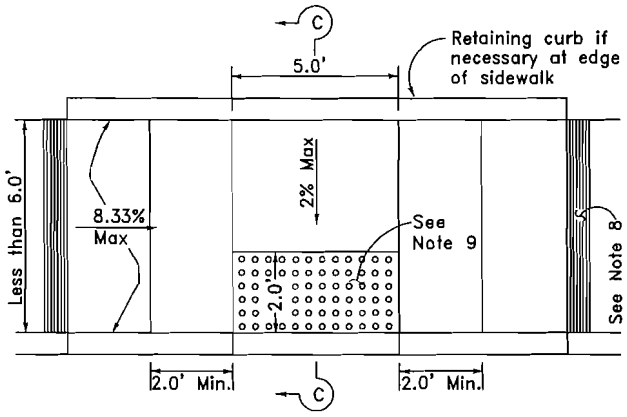

CASE C

Use when sidewalk is less than 6.0' wide

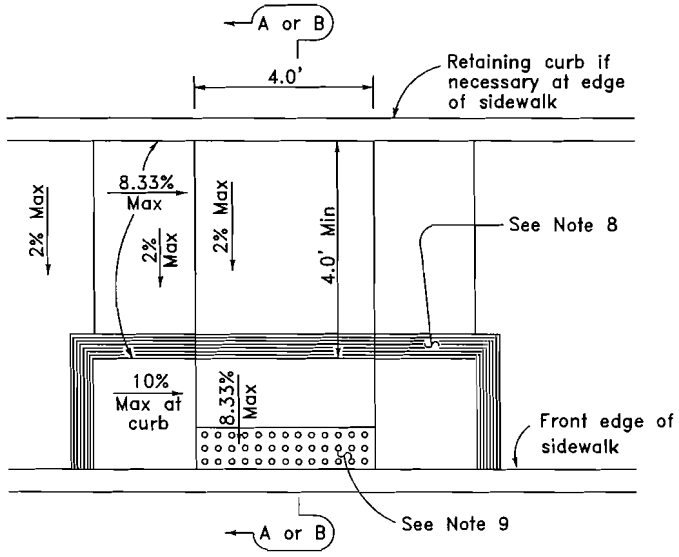

CASE B

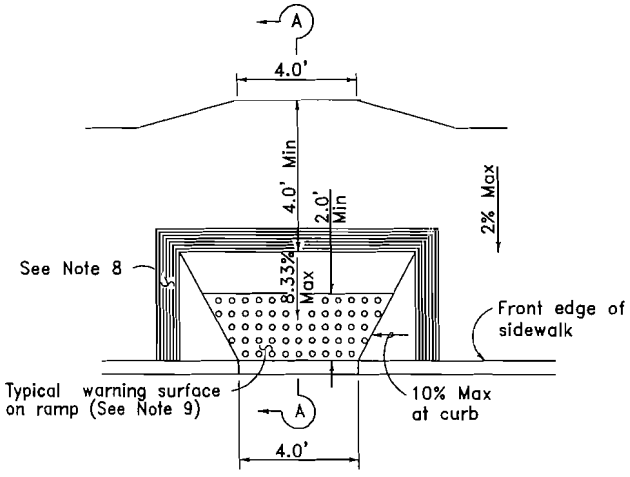

CASE D

NOTES:

1. If distance from curb to back of sidewalk is too short to accommodate ramp and 4.0' platform as in Case A, the sidewalk may be depressed longitudinally as in Case B or C or may be widened as in Case D.
2. If sidewalk is less than 6.0' wide, the full width of the sidewalk shall be depressed as shown in Case C.
3. When ramp is located in center of curb return, crosswalk configuration must be similar to that shown for Case E on STD. Dwg S-5 to accommodate wheelchairs.
4. For Cases F and G, the longitudinal portion of the sidewalk may need to be depressed as shown in Case B.
5. If located on a curve the sides of the ramp need not be parallel, but the minimum width of the ramp shall be 4.0'.
6. Transitions from ramps to walks, gutters, or streets shall be flush and free of abrupt changes.
7. The ramp shall have a 1.0' wide border with 1/4" grooves approximately 3/4" on center. See grooving detail on STD. DWG S-5.
8. Curb ramps shall have a detectable warning surface that extends the full width of the ramp and 2.0' min. length, similar to that shown for Case D. Detectable warning surfaces, at the option of the Contractor, shall be constructed by cast-in-place or stamped method, or consist of a prefabricated surface. The prefabricated surface shall conform to the requirements in the project specifications.
9. When detectable warning surface is not required on a curb ramp, the concrete finish of the ramp and its flared sides shall have a transverse broomed surface texture rougher than the surrounding sidewalk.
10. Ramp side slope varies uniformly from a maximum of 10% at curb to conform with longitudinal sidewalk slope adjacent to top of the ramp, except for Case C.
11. Utility pull boxes, manholes, vaults and all other utility facilities within the boundaries of a curb ramp will be relocated by the owner prior to, or in conjunction with curb ramp construction.
12. Maximum slopes of adjoining gutters, the road surface immediately adjacent to the curb ramp and continuous passage to the curb ramp shall not exceed 5 percent within 4.0' of the top or bottom of the curb ramp.
13. Design details shown on STD DWG S-4 and S-5 conform to details approved by the Division of the State Architect on March 18, 1996.
14. For existing sidewalk modification, provide 9" deep lift, 1'-0" wide along full length of ramp (see STD. DWGS S-2 and S-5)

CITY OF DALY CITY, CALIFORNIA — DEPARTMENT OF PUBLIC WORKS

DRAWN BY : A. TAN

CURB RAMP DETAILS – I

DATE: 02/04 APPROVED BY: MP Sharma, CITY ENGINEER STANDARD DRAWING NO. S-4

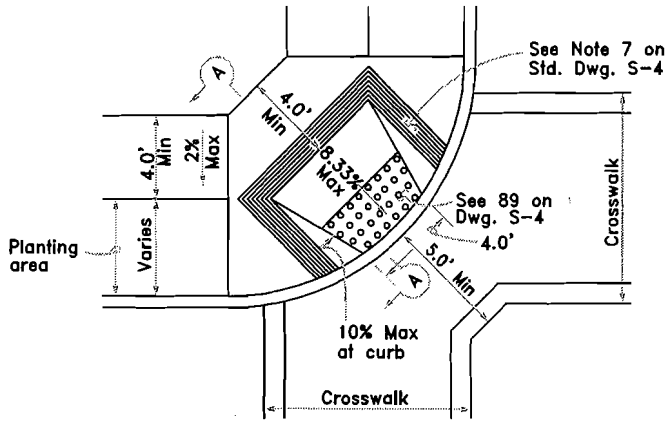

CASE E

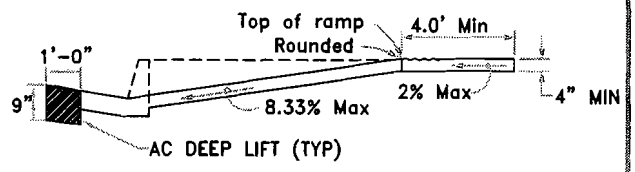

SECTION A–A

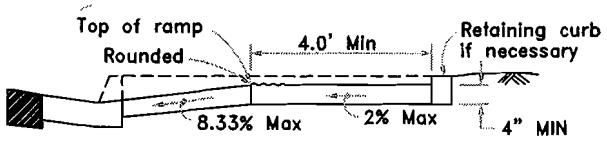

SECTION B–B

Depress entire sidewalk as required

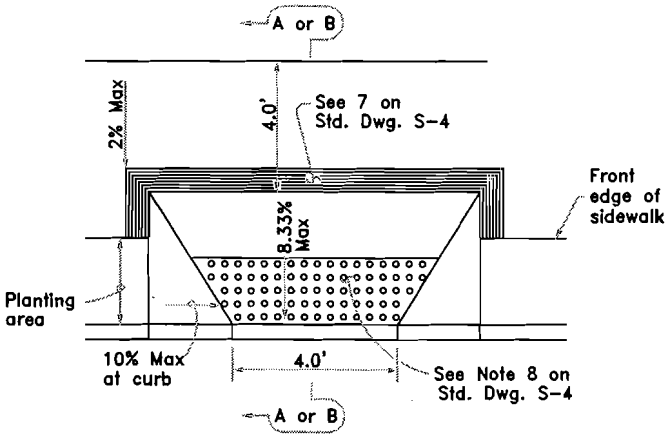

CASE F

See Note 4 on Std. Dwg. S-4

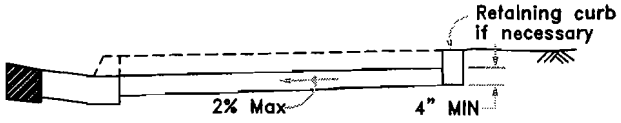

SECTION C–C

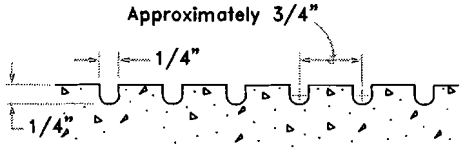

GROOVING DETAIL

1'-0" WIDE (TYPICAL)

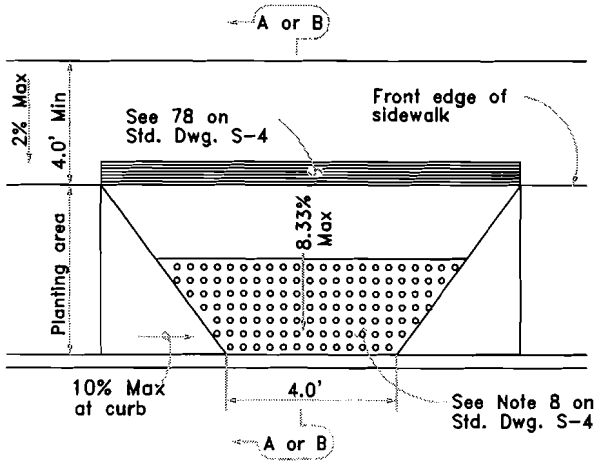

CASE G

See Note 4 on Std. Dwg. S-4

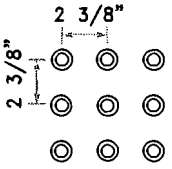

RAISED TRUNCATED DOME PATTERN

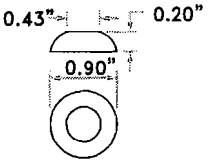

RAISED TRUNCATED DOME

DETECTABLE WARNING SURFACE

See Note 8 on Std. Dwg. S-4

NOTE: FOR ALL REFERENCED NOTES SEE STD. DWG S-4.

CITY OF DALY CITY, CALIFORNIA — DEPARTMENT OF PUBLIC WORKS

CURB RAMP DETAILS – II

DRAWN BY : A. TAN

DATE: 11/04

APPROVED BY: MPSharma, CITY ENGINEER

STANDARD DRAWING NO. S-5

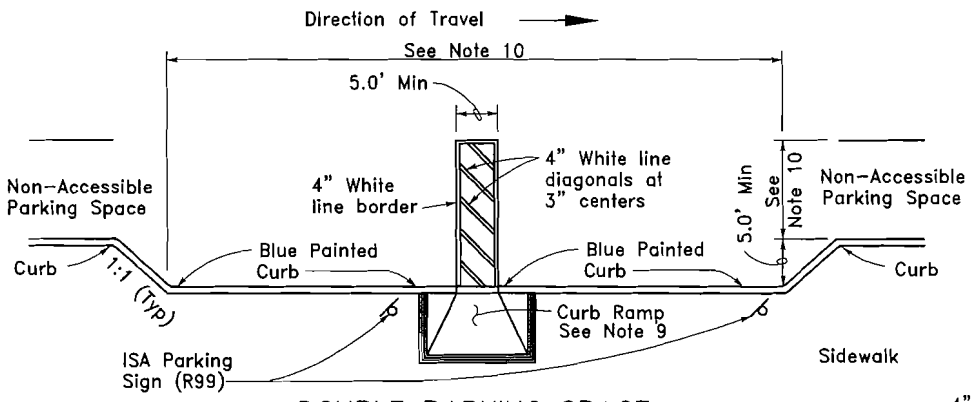

DOUBLE PARKING SPACE
ON-STREET PARKING
See Note 7

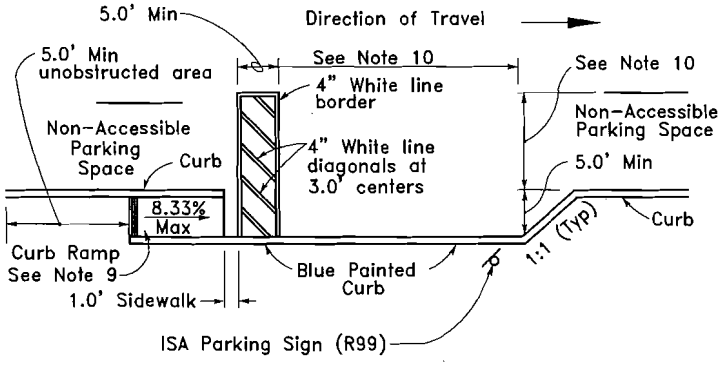

SINGLE PARKING SPACE
ON-STREET PARKING
See Note 7

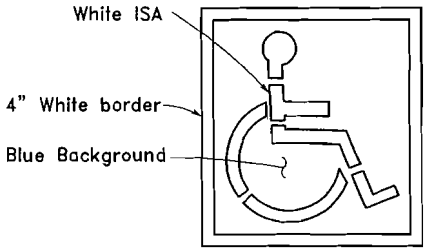

ISA MARKING FOR ACCESSIBLE PARKING SPACE OR STALL
(See State Std. Plan A24C)

DETAIL A

ISA PARKING SIGN (R99)
Standard 1.0' x 1.5'
See Note 8

VAN ACCESSIBLE SIGN
(R99A) Standard 1.0' x 8"
See Notes 2 and 8

TABLE A

Total Number of Parking Spaces or Stalls	Minimum Number of Disabled Accessible Parking Spaces or Stalls
1-25	1
26-50	2
51-75	3
76-100	4
101-150	5
151-200	6
201-300	7
301-400	8
401-500	9
501-1000	2 percent of total
Greater than 1001	20 plus 1 for each 100 or fraction thereof over 1001

OFF-STREET PARKING
(PARKING LOT OR GARAGE)

NOTES

1. Accessible parking stalls shall be located as close as possible, and on the shortest accessible route of travel, to the pedestrian entrance or exit of the parking lot or garage.
2. One in every eight accessible off-street parking stalls, but not less than one, shall be served by an accessible aisle of 8.0' minimum width and shall be signed van accessible. The R99A "Van Accessible" sign shall be mounted below the R99 "ISA Parking" sign.
3. In each parking stall, a curb or bumper shall be provided and located to prevent encroachment of vehicles over the required width of walkways. Parking stalls shall be so located that persons with disabilities are not compelled to wheel or walk behind parked cars other than their own.
4. When less than five parking stalls are provided, one stall with a minimum width of 17.0' shall be made accessible to persons with disabilities. However, there is no requirement that the stall be reserved so exclusively or so identified for that purpose.
5. Surface slopes of accessible off-street parking stalls shall be the minimum possible and shall not exceed 2 percent in any direction. Surface slopes of accessible on-street parking stalls shall be the minimum feasible.
6. Table A shall be used to determine the required number of accessible parking stalls in any parking lot or garage.
7. Where new on-street or time limited parking is provided and designated in districts zoned for business use, accessible parking shall be provided in accordance with Table A.
8. Where R99 "ISA Parking" or R99A "Van Accessible" signs are installed on sidewalks or other paths of travel, the bottom of the sign panel shall be a minimum of 6'-8" above the surface of the sidewalk or path. Where R99 or R99A signs are not installed on sidewalks or other paths of travel, the bottom of the sign panel shall be at least 4" above the parking area surface.
9. The concrete finish of the ramp and its flared sides shall have a transverse broomed surface texture rougher than the surrounding sidewalk.
10. Accessible on-street parking spaces shall not be smaller in length or width than that specified by the local City for other spaces.
11. Design details Shown on STD. DWG. S-6 and S-7 conform to details approved by the Division of the State Architect on March 18, 1996.

CITY OF DALY CITY, CALIFORNIA — DEPARTMENT OF PUBLIC WORKS

ACCESSIBLE PARKING DETAILS - I

DRAWN BY : A. TAN

DATE: 02/04

APPROVED BY: M P Sharma, CITY ENGINEER

STANDARD DRAWING NO. S-6

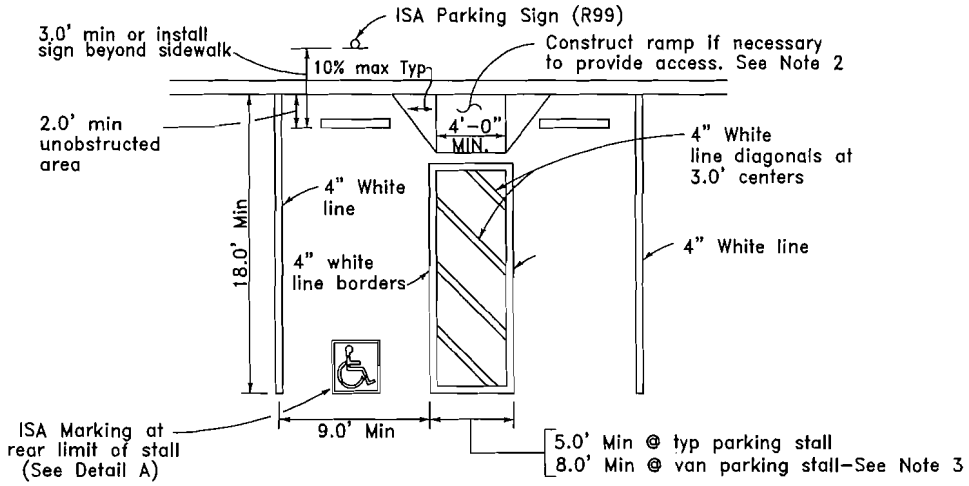

SINGLE PARKING STALL

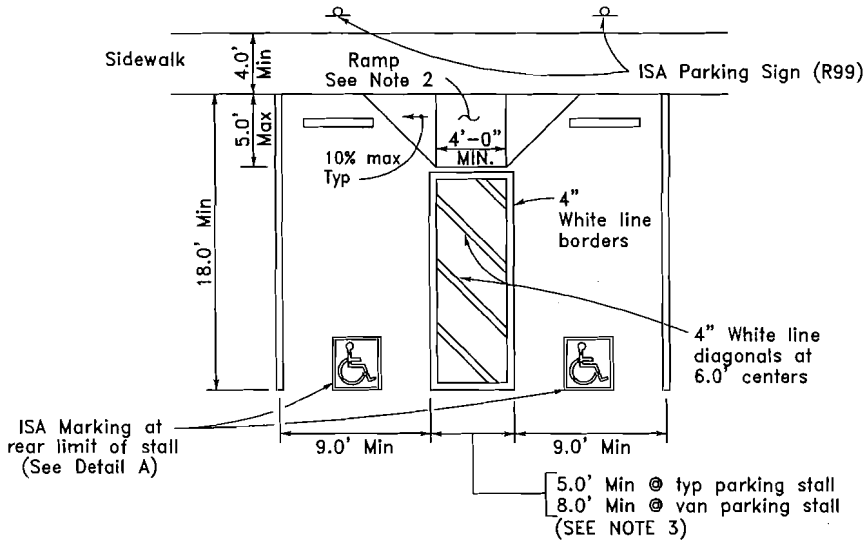

DOUBLE PARKING STALLS

NOTES:

1. SEE STD. DWG. S-6 FOR OTHER NOTES, OTHER DETAILS AND THE REQUIRED ACCESSIBLE PARKING SPACES (TABLE "A").
2. THE CONCRETE FINISH OF THE RAMP AND ITS FLARED SIDES SHALL HAVE A TRANSVERSE BROOMED SURFACE TEXTURE ROUGHER THAN THE SURROUNDING SIDEWALK.
3. ONE IN EVERY EIGHT ACCESSIBLE OFF-STREET PARKING STALLS, BUT NOT LESS THAN ONE, SHALL BE SERVED BY AN ACCESSIBLE AISLE OF 8.0' MINIMUM WIDTH AND SHALL BE SIGNED VAN ACCESSIBLE. THE R99A "VAN ACCESSIBLE" SIGN SHALL BE MOUNTED BELOW THE R99 "ISA PARKING" SIGN.

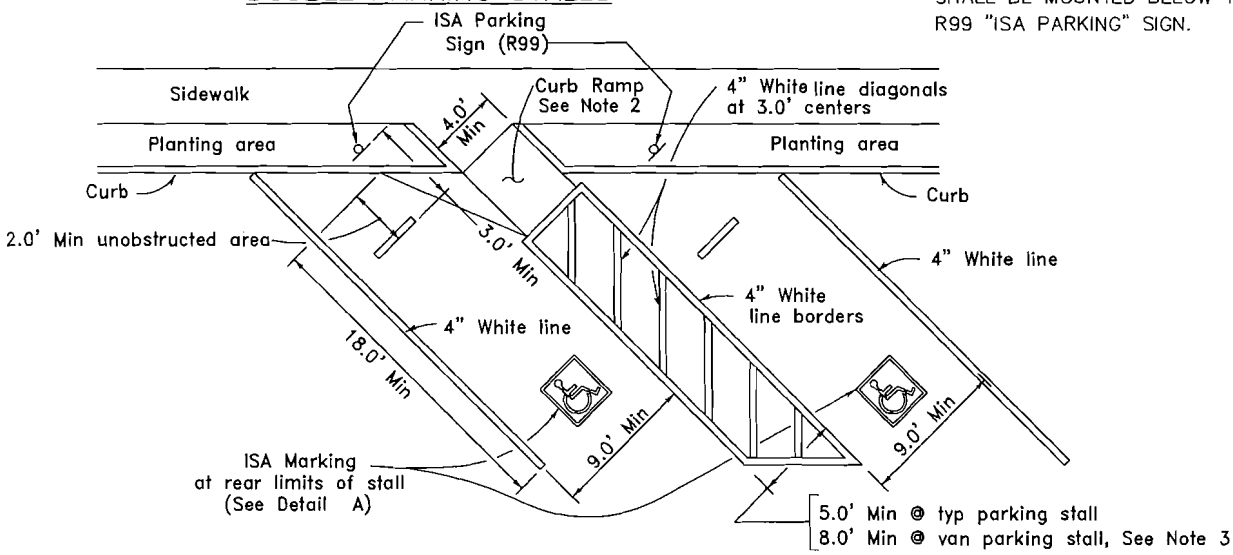

DIAGONAL PARKING STALLS

CITY OF DALY CITY, CALIFORNIA — DEPARTMENT OF PUBLIC WORKS

ACCESSIBLE PARKING DETAILS – II

DRAWN BY : A. TAN

DATE: 02/04

APPROVED BY: MPSharma, CITY ENGINEER

STANDARD DRAWING NO. S-7

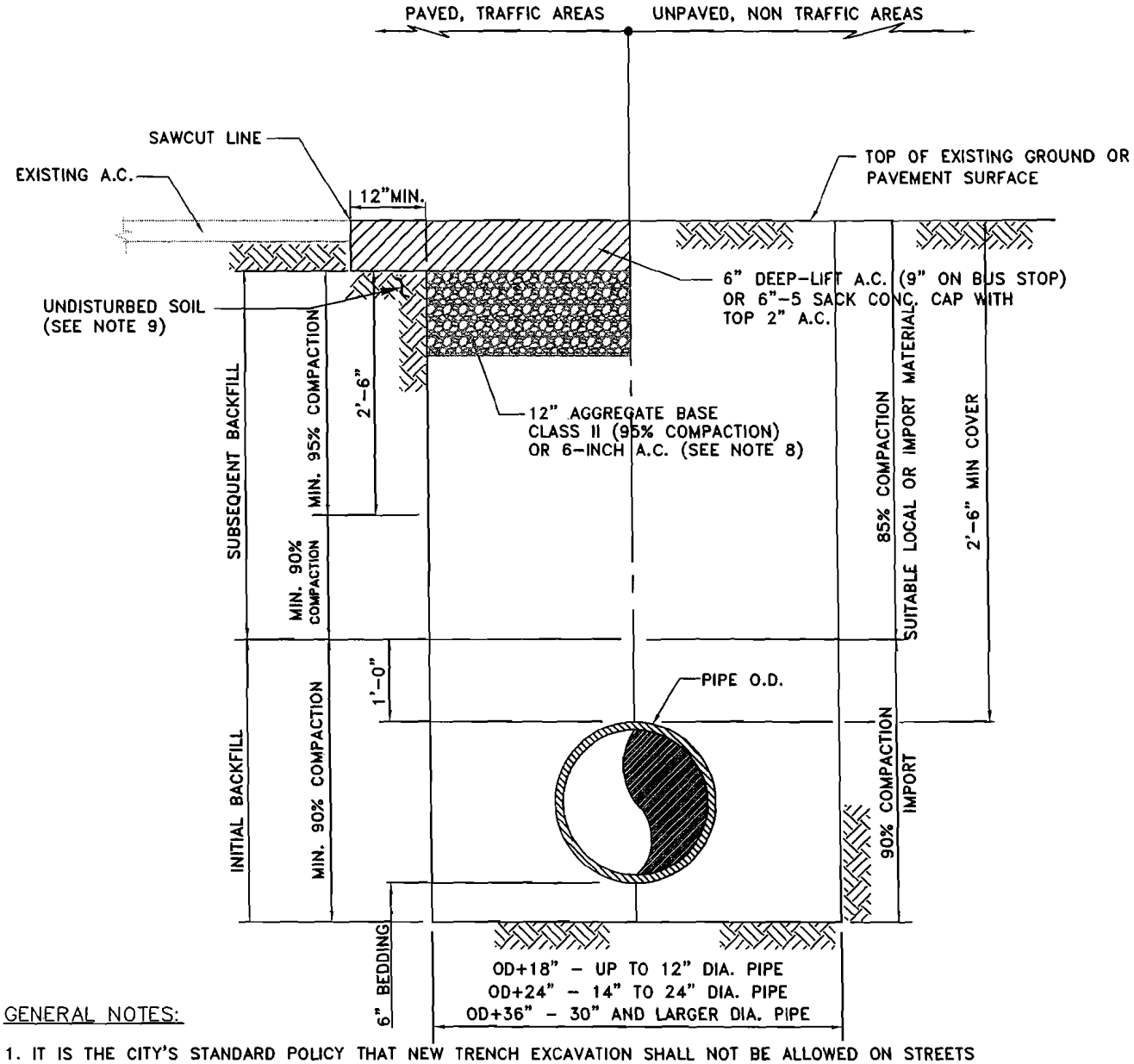

GENERAL NOTES:

1. IT IS THE CITY'S STANDARD POLICY THAT NEW TRENCH EXCAVATION SHALL NOT BE ALLOWED ON STREETS THAT HAVE BEEN RESURFACED WITHIN THE LAST FIVE (5) YEARS. IF NEW EXCAVATION IS APPROVED, PAVEMENT RESTORATION SHALL BE AT THE OPTION OF THE ENGINEER.
2. SEE STANDARD SPECIFICATIONS AND/OR PROJECT SPECIFICATIONS AND DRAWINGS FOR REQUIREMENTS RELATING TO THICKNESS OF DEEP LIFT ASPHALT TYPE OF IMPORT AND SUITABLE LOCAL EXCAVATION MATERIALS FOR USE AS BACKFILL.
3. ALL BACKFILL MATERIALS SHALL BE PLACED IN LOOSE LIFTS NOT EXCEEDING 8" IN THICKNESS BEFORE COMPACTION.
4. UNLESS OTHERWISE SPECIFIED RELATIVE DENSITY OF COMPACTION SHALL BE DETERMINED IN ACCORDANCE WITH ASTM D1557.
5. JETTING OR PONDING OF BACKFILL MATERIALS TO ACHIEVE COMPACTION WILL NOT BE ALLOWED. ONLY MECHANICAL COMPACTION METHODS WILL BE PERMITTED.
6. ALL TRENCH EXCAVATION SHALL CONFORM TO OSHA REQUIREMENTS.
7. SEE STD DWG S-9 FOR STREET PATCHING DETAILS AND "SLURRY" TRENCH FOR ELECTRICAL, COMMUNICATION AND SIGNAL CONDUIT.
8. THE 12-INCH AGGREGATE BASE/6-INCH A.C. MAY BE WAIVED FOR RESIDENTIAL STREETS WITH CITY ENGINEER'S APPROVAL.
9. REMOVE LOOSE SOIL IF IT IS DISTURBED DURING EXCAVATION.

CITY OF DALY CITY, CALIFORNIA — DEPARTMENT OF PUBLIC WORKS

TYPICAL PIPE TRENCH
EXCAVATION AND BACKFILL REQUIREMENTS

DRAWN BY : A. TAN

DATE: 01/05

APPROVED BY: MPSharma, CITY ENGINEER

STANDARD DRAWING NO. S-8

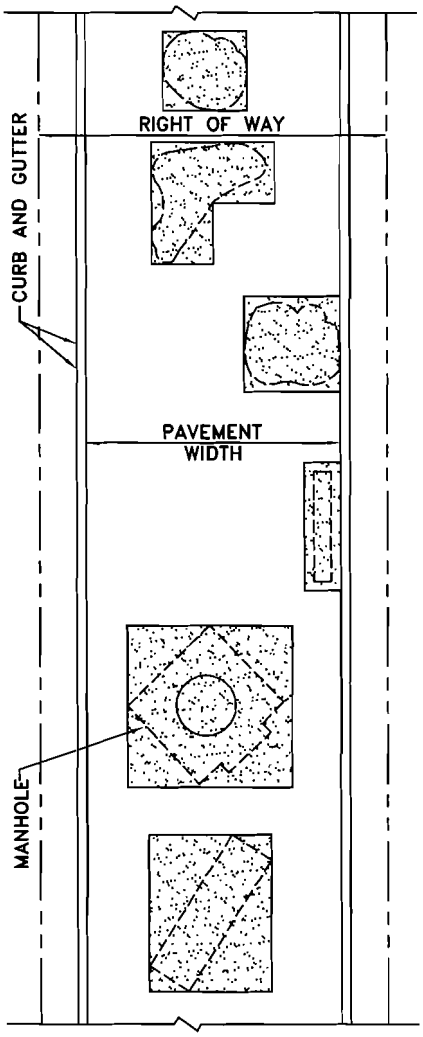

STREET PATCHING

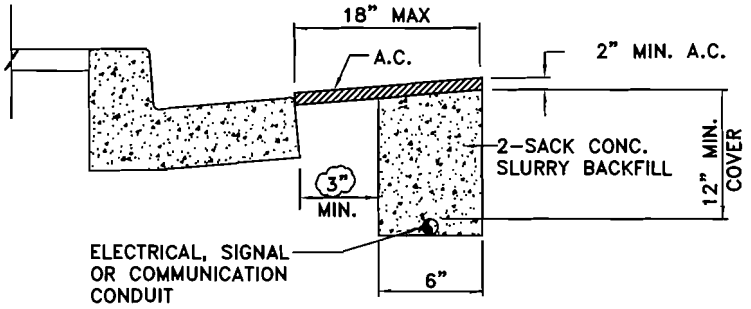

ELECTRICAL, COMMUNICATION AND SIGNAL CONDUIT TRENCH – CONCRETE SLURRY

ROCKWHEEL TRENCH AT GUTTER

GENERAL NOTES:

1. ALL WORK AND MATERIALS SHALL CONFORM TO APPLICABLE SECTIONS OF PROJECT SPECIFICATIONS AND/OR CALTRANS AND DALY CITY STD SPECIFICATIONS & STD DRAWINGS. SEE STD. DWG S-8 FOR TYPICAL TRENCH EXCAVATION AND BACKFILL REQUIREMENTS WITHOUT CONCRETE CAP OR CONCRETE SLURRY FILL.
2. PATCH EDGES SHALL BE PARALLEL AND/OR PERPENDICULAR TO PAVEMENT EDGE (CURB LINE). PATCHES WITHIN 18" OF PAVEMENT EDGE SHALL BE EXTENDED TO THE PAVEMENT EDGE.
3. TRENCHES SHALL BE BACKFILLED AND PAVED (PERMANENT OR TEMPORARY) OR COVERED WITH STEEL PLATES AT THE END OF EACH DAY. TEMPORARY PAVING SHALL BE REPLACED WITH PERMANENT PAVING WITHIN 72 HOURS.
4. NO RESIDENT OR COMMERCIAL DRIVEWAYS SHALL BE BLOCKED WITHOUT ADVANCE NOTICE TO THE OWNER. DRIVEWAYS MAY BE BLOCKED ONLY DURING ACTUAL CONSTRUCTION. TRENCH SHALL BE BACKFILLED OR BRIDGED TO ALLOW ACCESS TO DRIVEWAY.
5. CONTRACTOR SHALL CALL THE ENGINEERING DIVISION FOR INSPECTION ON BACKFILLING, SURFACING AND ALL OTHER PHASES OF WORK GIVING 48 HOURS ADVANCE NOTICE PRIOR TO COMMENCEMENT OF ANY WORK OR PHASE OF WORK

CITY OF DALY CITY, CALIFORNIA — DEPARTMENT OF PUBLIC WORKS

STREET TRENCHING AND PATCHING

DRAWN BY : A. TAN

DATE: 6/03 APPROVED BY: MPSharma, CITY ENGINEER STANDARD DRAWING NO. S-9

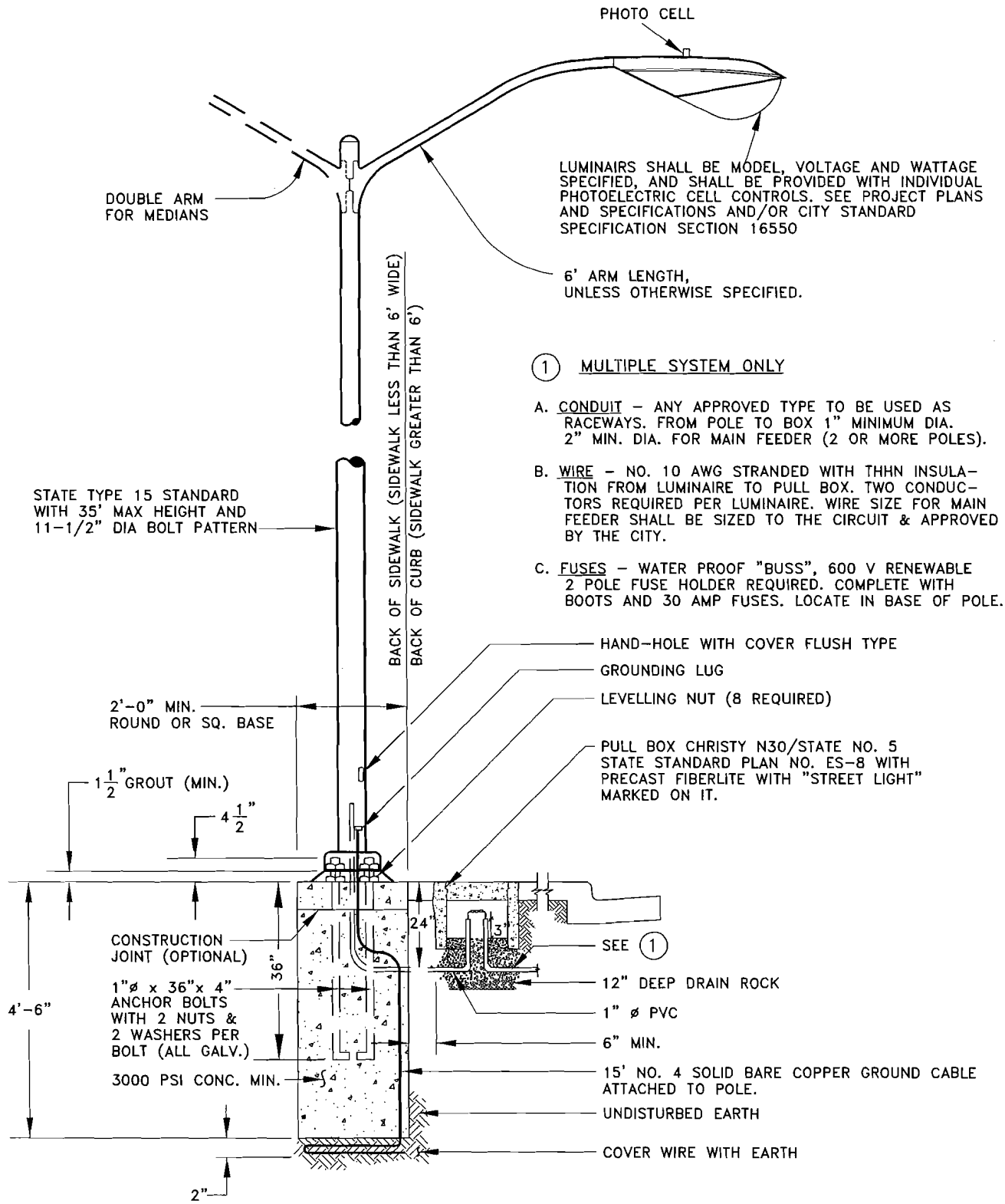

ELEVATION

(1) MULTIPLE SYSTEM ONLY

A. CONDUIT – ANY APPROVED TYPE TO BE USED AS RACEWAYS. FROM POLE TO BOX 1" MINIMUM DIA. 2" MIN. DIA. FOR MAIN FEEDER (2 OR MORE POLES).

B. WIRE – NO. 10 AWG STRANDED WITH THHN INSULATION FROM LUMINAIRE TO PULL BOX. TWO CONDUCTORS REQUIRED PER LUMINAIRE. WIRE SIZE FOR MAIN FEEDER SHALL BE SIZED TO THE CIRCUIT & APPROVED BY THE CITY.

C. FUSES – WATER PROOF "BUSS", 600 V RENEWABLE 2 POLE FUSE HOLDER REQUIRED. COMPLETE WITH BOOTS AND 30 AMP FUSES. LOCATE IN BASE OF POLE.

CITY OF DALY CITY, CALIFORNIA — DEPARTMENT OF PUBLIC WORKS

TYPICAL STREET LIGHTING

DRAWN BY : A. TAN

DATE: 02/04 — APPROVED BY: MP Sharma, CITY ENGINEER — STANDARD DRAWING NO. S-10

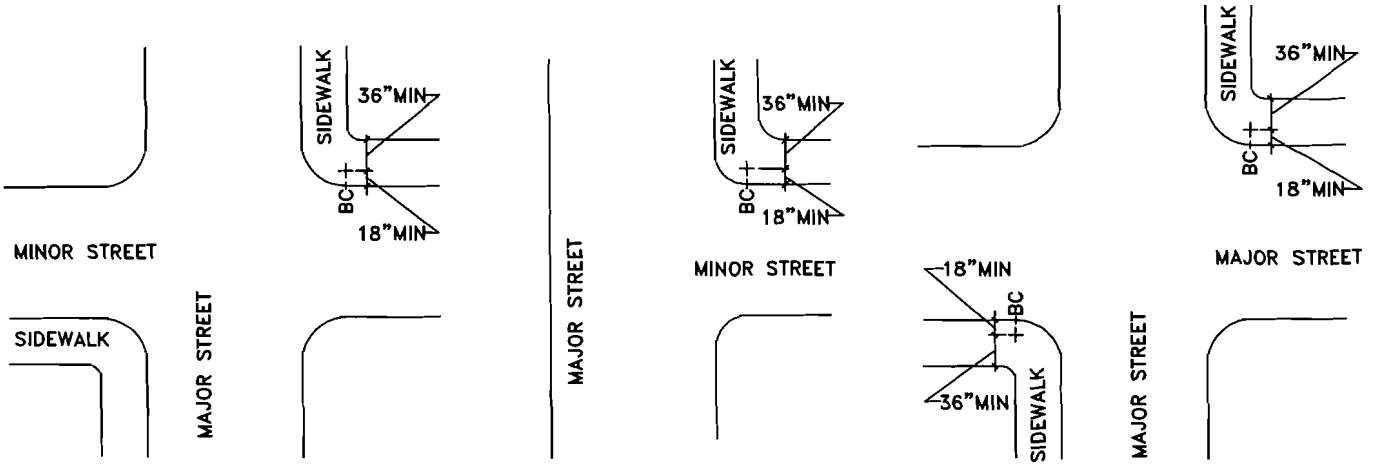

STREET NAME SIGN LOCATION

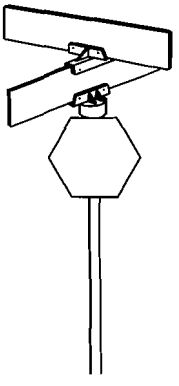

DETAIL A

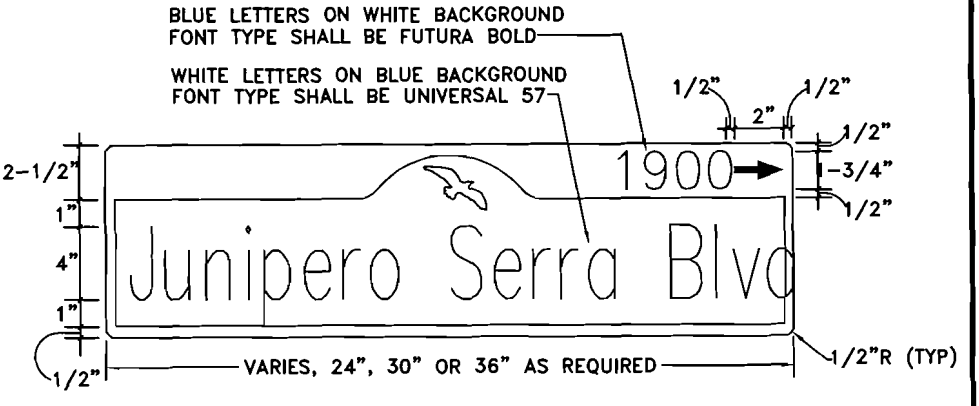

TYPICAL STREET NAME SIGN

NOTES:

1. FOR ALL STREET INTERSECTIONS IN BUSINESS DISTRICTS, AND FOR ALL INTERSECTIONS OF MAJOR STREETS, STREET NAME SIGNS SHOULD BE PLACED ON DIAGONALLY OPPOSITE CORNERS SO THAT THEY WILL BE ON THE FAR RIGHT-HAND SIDE OF THE INTERSECTION FOR TRAFFIC ON THE MAJOR STREET. SIGNS NAMING BOTH STREETS SHOULD BE ERECTED AT EACH LOCATION. THEY SHOULD BE MOUNTED WITH THEIR FACES PARALLEL TO THE STREETS THEY NAME.
2. EACH SIGN POST SHALL BE PLACED TO CLEAR THE PEDESTRIAN CROSSING AT THE INTERSECTION. DIMENSIONS ARE VARIABLE GUIDELINES. EXISTING GEOMETRIC DISCREPANCIES SUCH AS, TREES, STREET LIGHTS, UTILITY POLES, BUILDING CORNERS, AND PEDESTRIAN RAMPS MUST BE CONSIDERED.
3. AS REQUIRED, SIGNS TO BE PLACED ON EXISTING STOP SIGNS SHALL BE INSTALLED PER DETAIL "A".
4. NEW POLES ARE REQUIRED ONLY IF NO USEABLE EXISTING POLES OR STREET LIGHTS ARE IN THE IMMEDIATE VICINITY.
5. AT SIGNALIZED INTERSECTIONS, AS SPECIFIED OR DIRECTED, SUPPLEMENTARY STREET NAME SIGNS SHALL BE PLACED ON SIGNAL POLES UTILIZING SIGN BRACKET SHOWN ON STD. DWG S-12.

CITY OF DALY CITY, CALIFORNIA — DEPARTMENT OF PUBLIC WORKS

TYPICAL STREET NAME SIGN AND SIGN LOCATION

DRAWN BY : A. TAN

DATE: 6/03

APPROVED BY: MP Sharma, CITY ENGINEER

STANDARD DRAWING NO. S-11

NOTES:

1. PROVIDE SINGLE 9" PLATE FOR EACH STREET NAME.
2. EACH PLATE SHALL BE DOUBLE-FACED 0.125" THICK ALUMINUM.
3. SIGN BACKGROUND MATERIAL SHALL BE 3M SCOTCHLITE WHITE REFLECTIVE SHEETING, DIAMOND GRADE VIP, OR APPROVED EQUAL. LETTER MATERIAL SHALL BE SERIES 1170 3M SCOTCHLITE ELECTRONIC CUTTABLE FILM, TRANSLUCENT PRESSURE SENSITIVE 1175 BLUE, OR EQUAL. SEAGULL SYMBOL SHALL BE INCLUDED ON TOP OF EACH SIGN. LETTER FONT SHALL BE UNIVERSAL 57.
4. HARDWARE SLOTS MUST BE REAMED TO 0.164 TO FIT DOUBLE FACE SIGN.
5. ALL SIGN POSTS SHALL BE 2" I.D. GALVANIZED STEEL PIPE, SCHEDULE 40.
6. SEE STD. DWG S-11 FOR TYPICAL SIGN FABRICATION AND LOCATION.
7. SMALLEST SIGN SIZE (24") SHALL BE USE WHENEVER FEASIBLE. LARGER SIZES TO BE USED ONLY WHERE LENGTH OF STREET NAME REQUIRES.

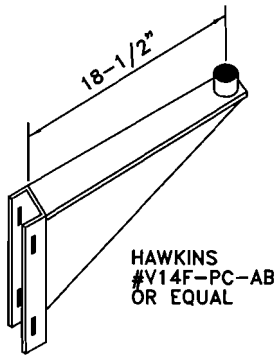

SIGN BRACKET
FOR TRAFFIC SIGNAL
OR STREET LIGHT POLE

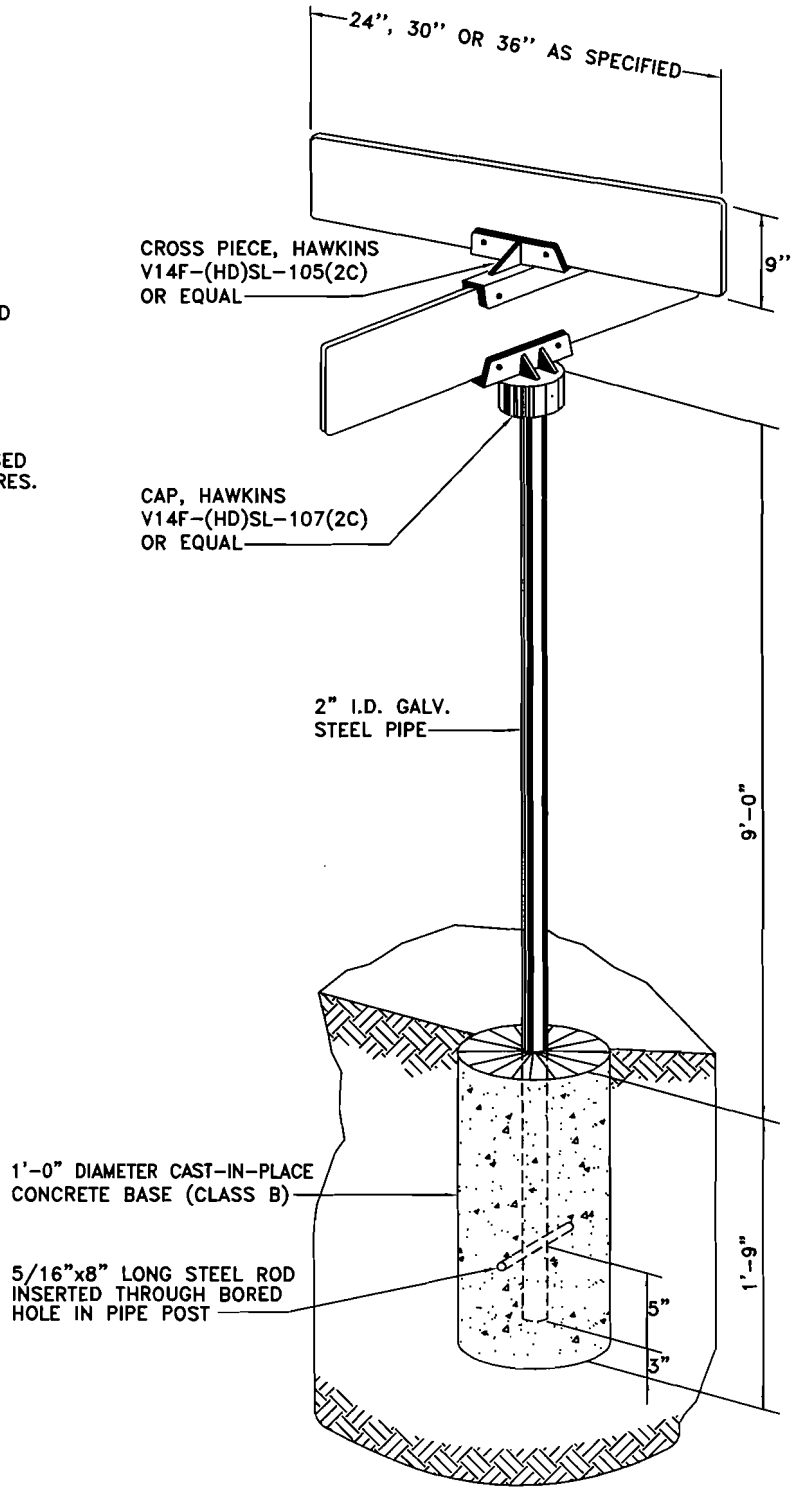

CITY OF DALY CITY, CALIFORNIA — DEPARTMENT OF PUBLIC WORKS

STREET NAME SIGN CONSTRUCTION

DRAWN BY : A. TAN

DATE: 6/03

APPROVED BY: M P Sharma, CITY ENGINEER

STANDARD DRAWING NO. S-12

ALTERNATE 1
NORMAL CONDITION

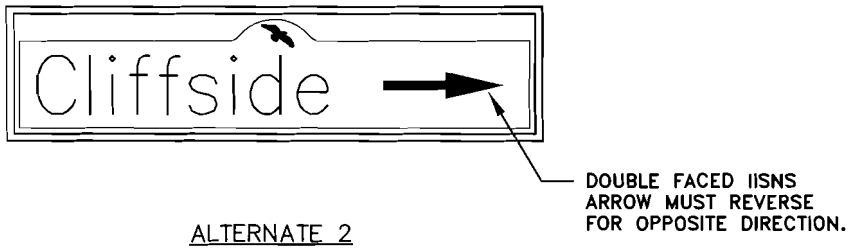

ALTERNATE 2

FOR LOCATIONS HAVING DIFFERENT STREET NAME IN OPPOSITE DIRECTIONS, SIGN SIZE AND LETTERING TO BE AS FOR ALTERNATE 1.

GENERAL NOTES:

1. SEE CALTRANS 'TRAFFIC MANUAL' PAGE 4-110, TABLE 4-4 FOR STANDARD WIDTH OF EACH LETTER USING THE FOLLOWING SIZES:
   - 8" U.C. & 6" L.C. FOR ACTUAL STREET NAMES

2. FOR EACH STREET NAME SIGN, A LETTERING WIDTH FACTOR THAT VARIES BETWEEN 0.65 AND 1.00 MAY BE USED TO REDUCE THE STANDARD LETTER WIDTHS AS REQUIRED TO FIT THE SIGN PANEL.

3. IF ROOM ALLOWS, USE THE FOLLOWING ABBREVIATIONS FOR STREET NAMES:

Wy - WAY	Ct - COURT	Pkwy - PARKWAY	Ave - AVENUE	E - EAST	N - NORTH	St(Pre) - SAINT
Rd - ROAD	Dr - DRIVE	Blvd - BOULEVARD		W - WEST	S - SOUTH	St(Post) - STREET

4. LETTERS, SEAGULL, AND BORDERS SHALL BE WHITE ON A BLUE BACKGROUND. SIGN PANEL MANUFACTURER SHALL SUBMIT A SHOP DRAWING FOR CITY'S APPROVAL.

5. FACE LEGEND SHALL CONSIST OF A CONTINUOUS PIECE OF TRANSLUCENT BLUE VINYL APPLIED OVER THE POLYCARBONATE SIGN FACE HAVING THE APPEARANCE OF A SIGN WITH A WHITE LEGEND ON A BLUE BACKGROUND.

CITY OF DALY CITY, CALIFORNIA — DEPARTMENT OF PUBLIC WORKS

DRAWN BY : A. TAN

INTERNALLY ILLUMINATED STREET NAME SIGN - GENERAL

DATE: 6/03

APPROVED BY: MPSharma, CITY ENGINEER

STANDARD DRAWING NO. S-13

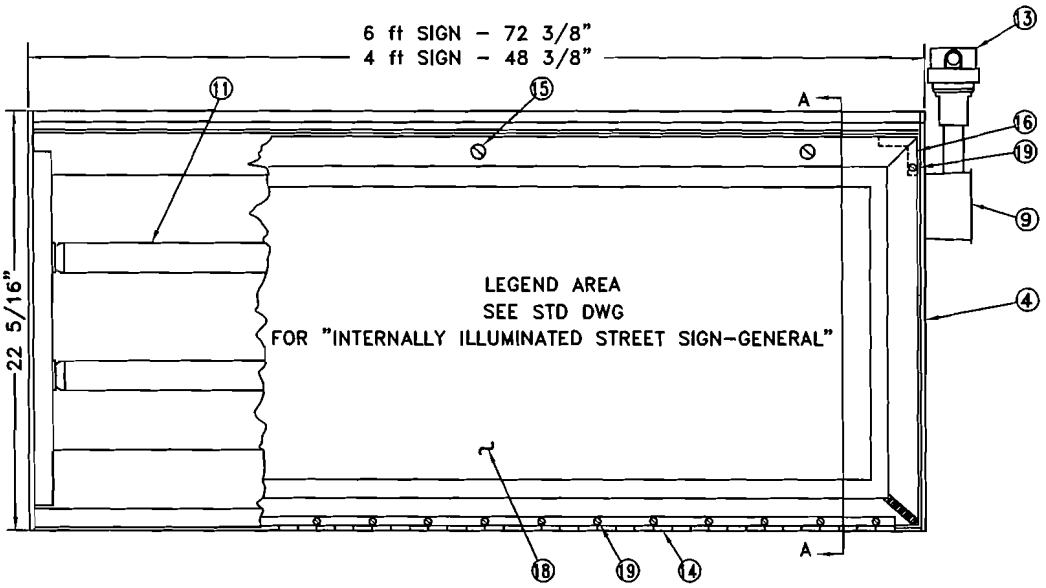

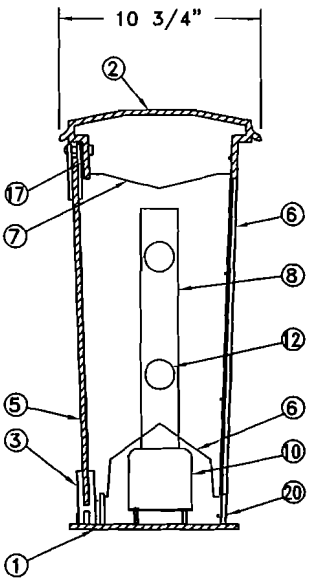

SECTION A-A

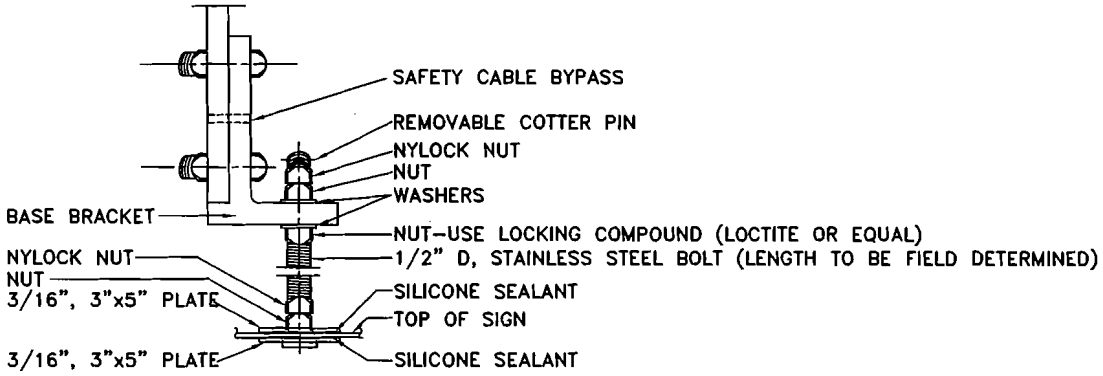

BRACKET MOUNT

ITEM	DESCRIPTION	QTY.
1	BOTTOM EXTRUSION, 0.094 ALUMINUM	1
2	TOP EXTRUSION, 0.140 ALUMINUM	1
3	DOOR FRAME, 0.125 EXTRUDED ALUMINUM	1
4	END CASTINGS, ALUMINUM	2
5	FACE, 0.125 POLYCARBONATE	1
6	BACK PLATE, 0.63 ALUMINUM	1
7	REFLECTORS, 0.020 ALUMINUM	2
8	SOCKET TRACKS, 0.063 ALUMINUM	2
9	ELECTRICAL BOX	1
10	BALLAST, HIGH OUTPUT, VALMONT 6G3934WF, OR EQUIVLENT	1
11	FLUORESCENT LAMPS, F-(48,60,72,84 OR 96)-T12-CW-HO	2
12	SOCKETS, KULKA #582 & #583	2
13	LOCKING-TYPE PHOTOCONTROL	1
14	CONTINUOUS HINGE, 1 1/16" (OPEN), STAINLESS STEEL	1
15	1/4 TURN AIRLOC FASTENERS	3
16	CORNER POSTS, ALUMINUM	2
17	DOOR GASKET	1
18	BLUE TRANSLUCENT VINYL FILM	1
19	#8x3/8" HEX HEAD INDENTED SHEET METAL SCREWS, STAINLESS STEEL	AS REQD.
20	1/8" POP RIVETS, STAINLESS STEEL	AS REQD.

NOTES:

1. SIGN SHALL BE EQUIPPED WITH A MINIMUM OF FOUR 3/16" DIA. DRAIN HOLES LOCATED IN THE BOTTOM OF THE HOUSING (TWO AT EACH END).
2. PHOTOCONTROLS MAY BE PLACED ON TOP OF THE SIGN.
3. REFER TO CALTRANS STANDARD PLAN ES-33 (NOTES 11 , 22 , 23 , AND 24 ONLY) FOR SIGN PLACEMENT, SIGN STRAPPING CLAMP AND CONNECTOR NOTES AND DETAIL.
4. FOUR(4) FOOT SIGN SHALL BE USED WHEREVER FEASIBLE.
5. 1/8" DIA. STAINLESS STEEL SAFETY CABLES WITH A BREAKING STRENGTH OF 1760 LBS, SHALL BE ATTACHED TO EACH END OF THE BASE BRACKET, CONNECTING SIGN TO SIGNAL MASTARM.

CITY OF DALY CITY, CALIFORNIA — DEPARTMENT OF PUBLIC WORKS

DRAWN BY : A. TAN

DATE: 02/04

INTERNALLY ILLUMINATED
STREET NAME SIGN - FABRICATION DETAILS

APPROVED BY: MP Sharma, CITY ENGINEER

STANDARD DRAWING NO. S-14

N:\Staff\Iqbal Singh\STD PLANS -Modifications\S-14.dwg, 02/02/2004 10:46:04 AM

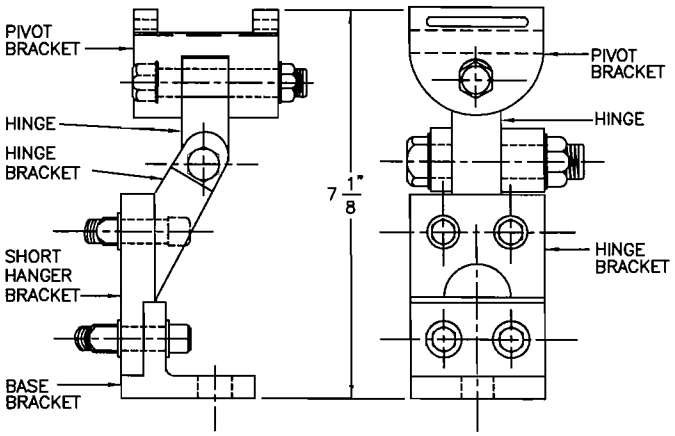

FIX LENGTH SIGN BRACKET

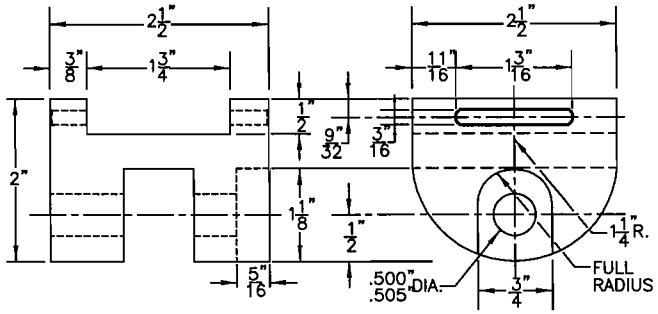

PIVOT BRACKET

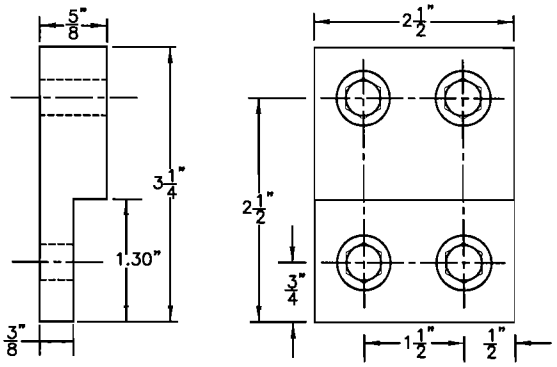

SHORT HANGER BRACKET

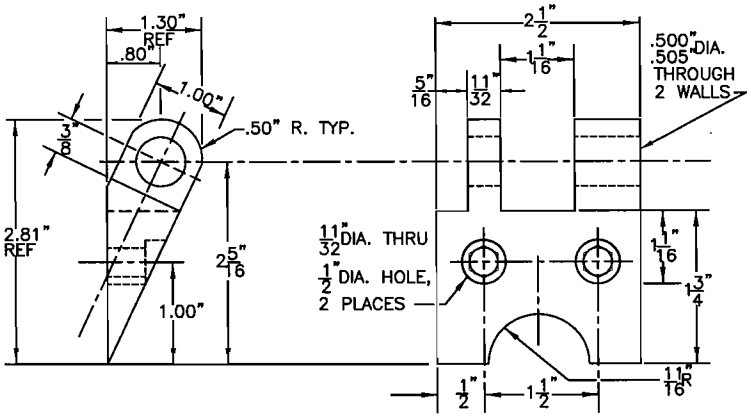

HINGE BRACKET

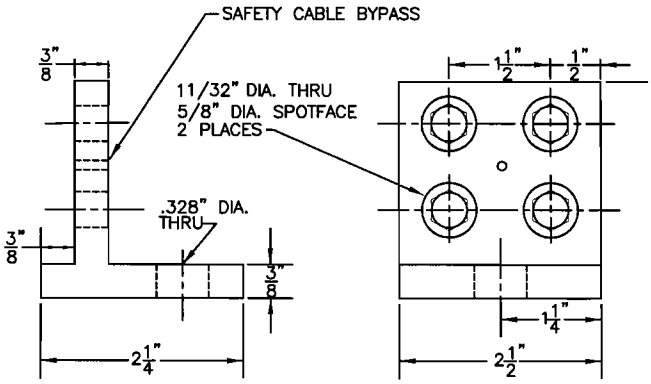

BASE BRACKET

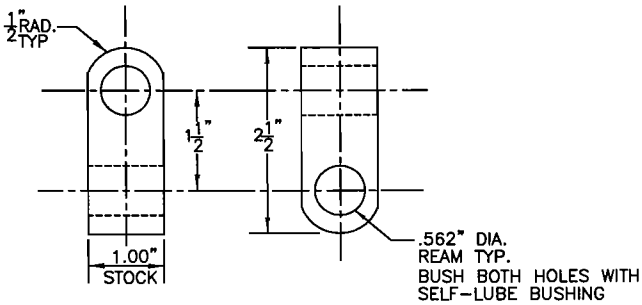

HINGE

NOTE: ALL PARTS SHALL BE MADE OF ALUMINUM OR OTHER CITY APPROVED MATERIAL.

CITY OF DALY CITY, CALIFORNIA — DEPARTMENT OF PUBLIC WORKS

DRAWN BY : A. TAN

DATE: 07/07

INTERNALLY ILLUMINATED
STREET NAME SIGN -- BRACKET DETAILS I

APPROVED BY: MP Sharma, CITY ENGINEER

STANDARD DRAWING NO. S-15

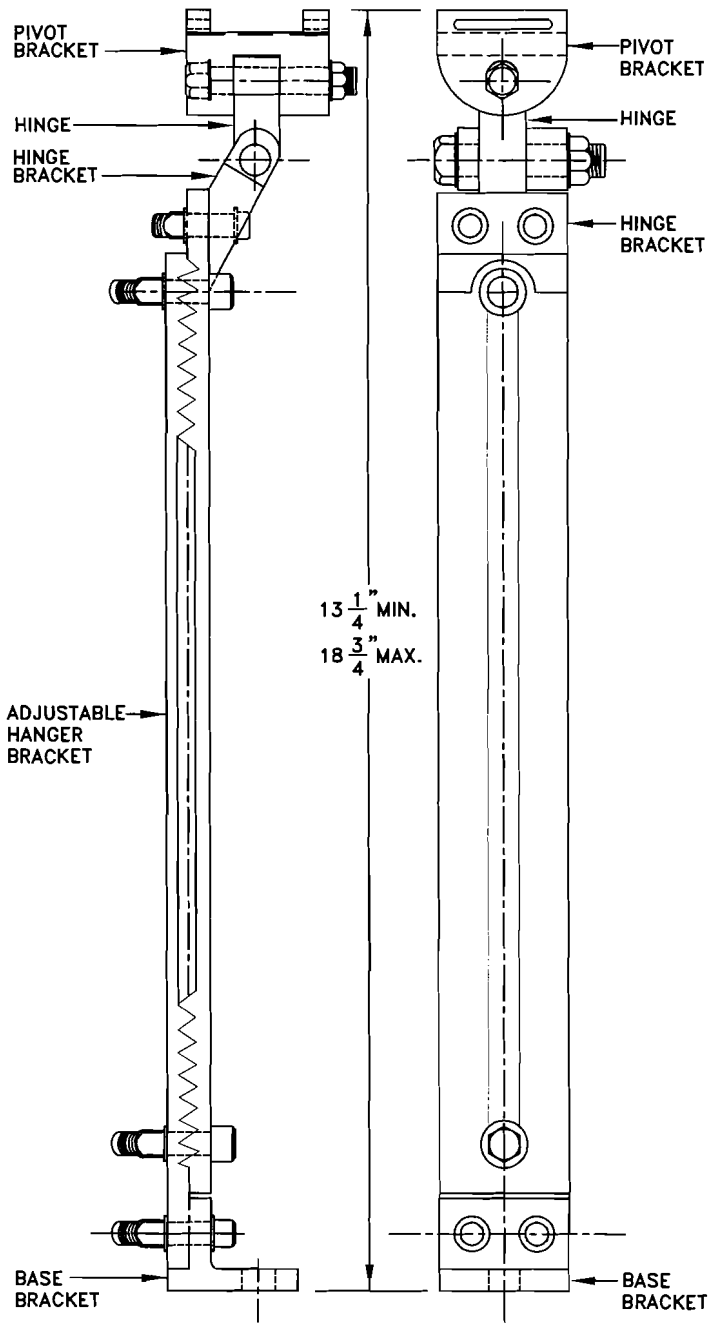

ADJUSTABLE BRACKET EXTENSION, IF NEEDED.

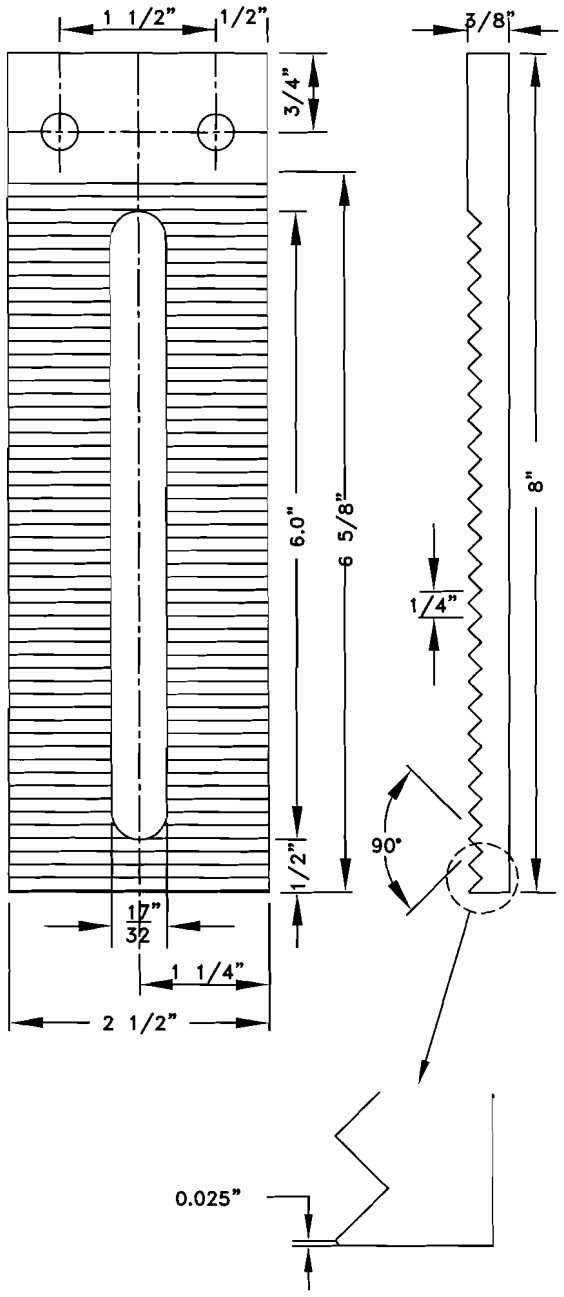

ADJUSTABLE HANGER BRACKET

NOTE: ALL PARTS SHALL BE MADE OF ALUMINUM OR OTHER CITY APPROVED MATERIAL.

CITY OF DALY CITY, CALIFORNIA — DEPARTMENT OF PUBLIC WORKS

DRAWN BY : A. TAN

DATE: 6/03

INTERNALLY ILLUMINATED
STREET NAME SIGN BRACKET DETAILS – II

APPROVED BY: M P Sharma, CITY ENGINEER

STANDARD DRAWING NO. S-16

NOTE: ALL PARTS SHALL BE MADE OF ALUMINUM
OR OTHER CITY APPROVED MATERIAL

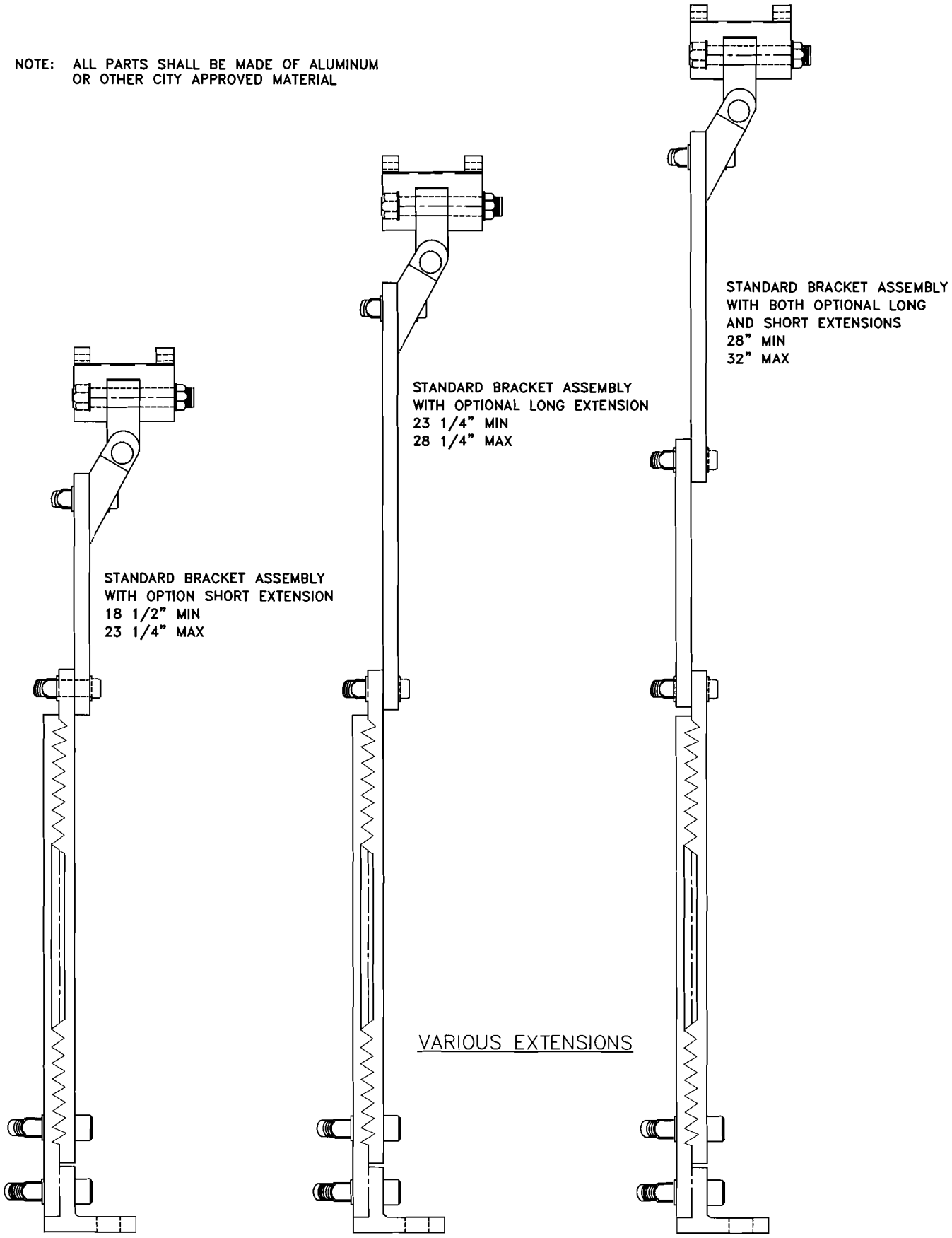

VARIOUS EXTENSIONS

CITY OF DALY CITY, CALIFORNIA

DEPARTMENT OF PUBLIC WORKS

DRAWN BY : A. TAN

DATE: 6/03

INTERNALLY ILLUMINATED
STREET NAME SIGN BRACKET DETAILS – III

APPROVED BY: M P Sharma, CITY ENGINEER

STANDARD DRAWING NO. S-17

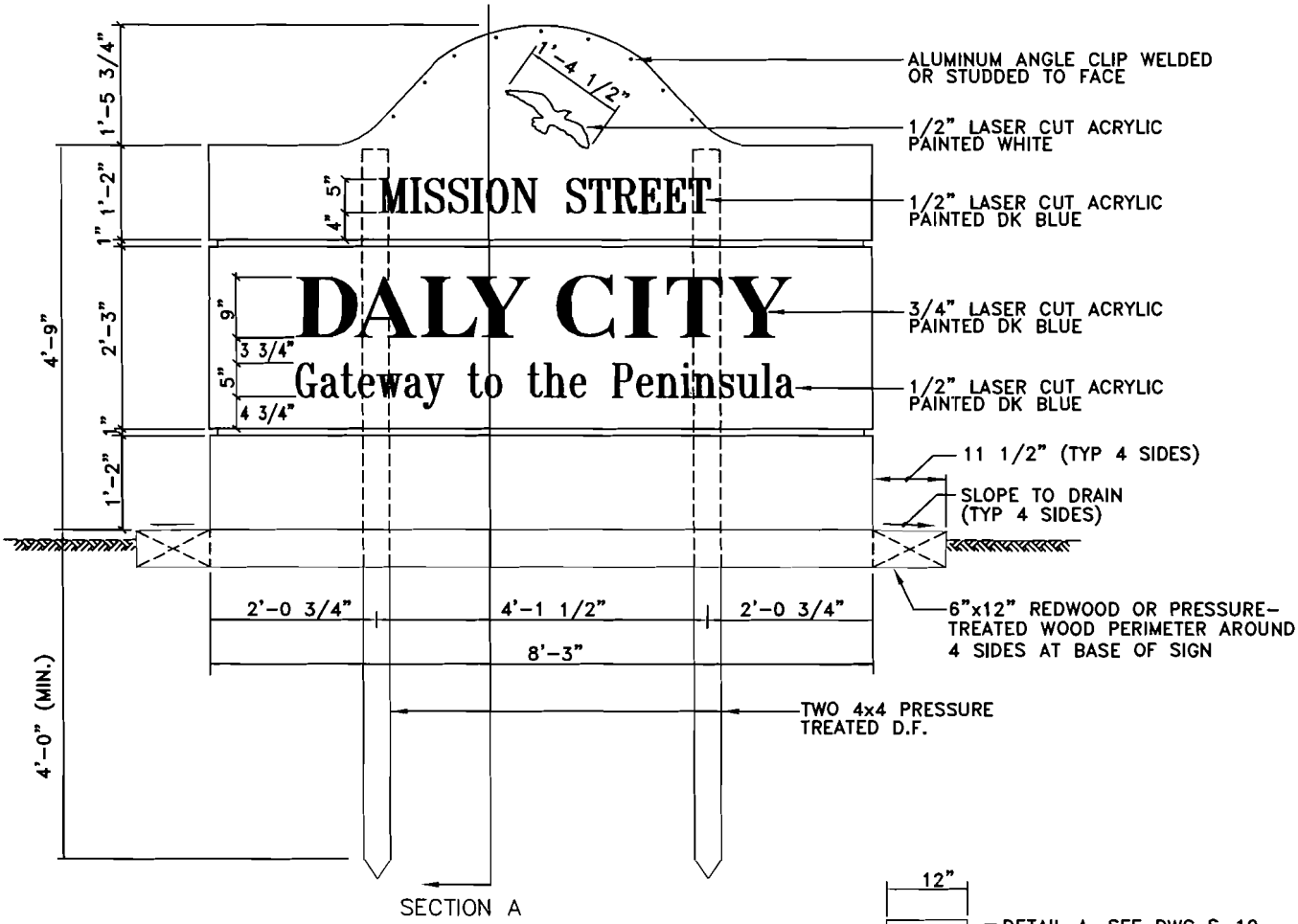

ELEVATION

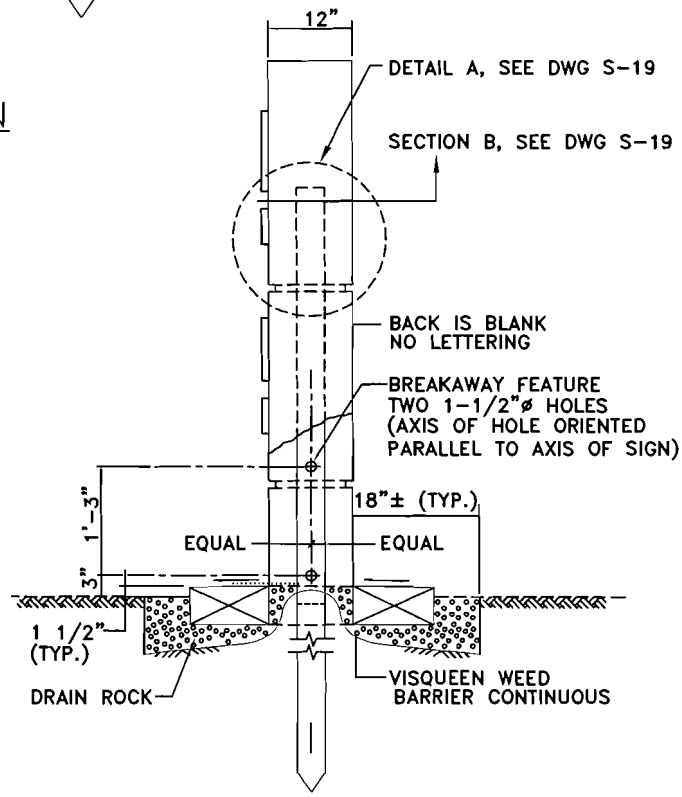

SECTION A

GENERAL NOTES:

1. CAST POLYMER SIGN FACES:

   WILLIAM KRAYSLER & ASSOC.
   MOLDED ARCHITECTURAL PRODUCTS
   P.O. BOX 173
   PENNGROVE, CA 94951
   TELEPHONE (707) 765-1102

   OR APPROVED EQUAL.

2. SIGN TO BE ENGINEERED FOR IMPACT FAILURE PER CALTRANS "BREAKWAY" SIGN STANDARDS.

3. NON-CORROSIVE MATERIALS SHALL BE USED THROUGHOUT.

4. CONTRACTOR SHALL PROVIDE SHOP DRAWINGS OF SIGN AND FOOTING.

5. FONT FOR TEXT "DALY CITY" SHALL BE TIMES BOLD. FONTS FOR OTHER TEXT SHALL BE TIMES ROMAN (CONDENSE 90%).

CITY OF DALY CITY, CALIFORNIA — DEPARTMENT OF PUBLIC WORKS

SINGLE FACE MONUMENT SIGN DETAILS – I

DRAWN BY : A. TAN

DATE: 6/03

APPROVED BY: MPSharma, CITY ENGINEER

STANDARD DRAWING NO. S-18

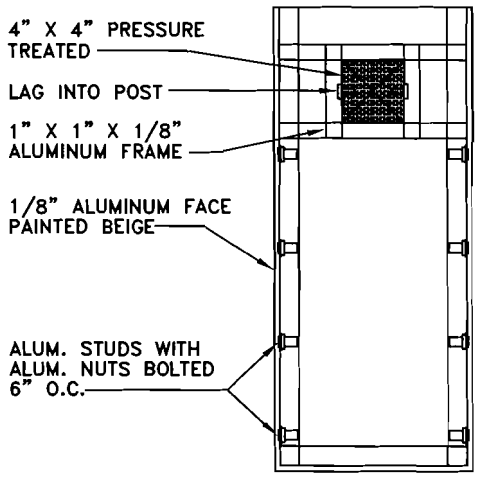

SECTION B

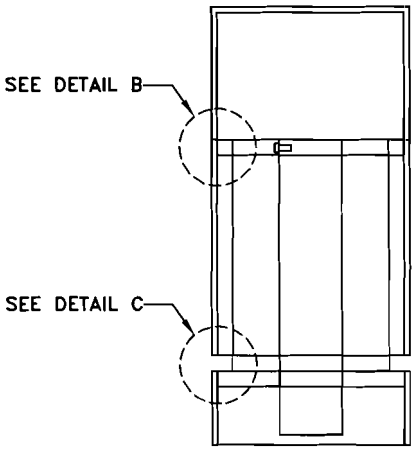

DETAIL A

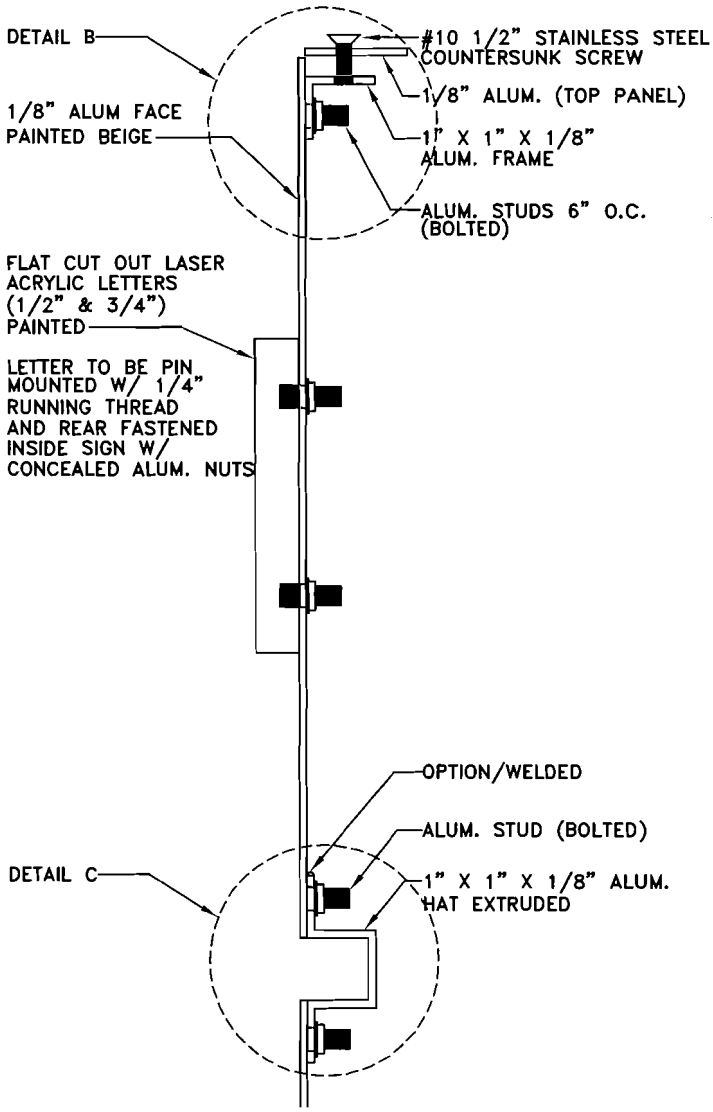

DETAIL B & C

GENERAL NOTES:

1. ALL PAINT TO BE ACRYLIC POLYURETHANE SATIN FINISH.
2. SIGN CONTRACTOR TO FURNISH COLOR & MATERIAL SAMPLES PRIOR TO FABRICATION
3. SIGN TO BE ENGINEERED FOR IMPACT FAILURE PER CALTRANS "BREAKAWAY" SIGN STANDARD
4. NON-CORROSIVE MATERIALS SHALL BE USED THOUGHOUT

CITY OF DALY CITY, CALIFORNIA — DEPARTMENT OF PUBLIC WORKS

DRAWN BY : A. TAN

SINGLE FACE MONUMENT SIGN DETAILS – II

DATE: 6/03

APPROVED BY: MPSharma, CITY ENGINEER

STANDARD DRAWING NO. S-19

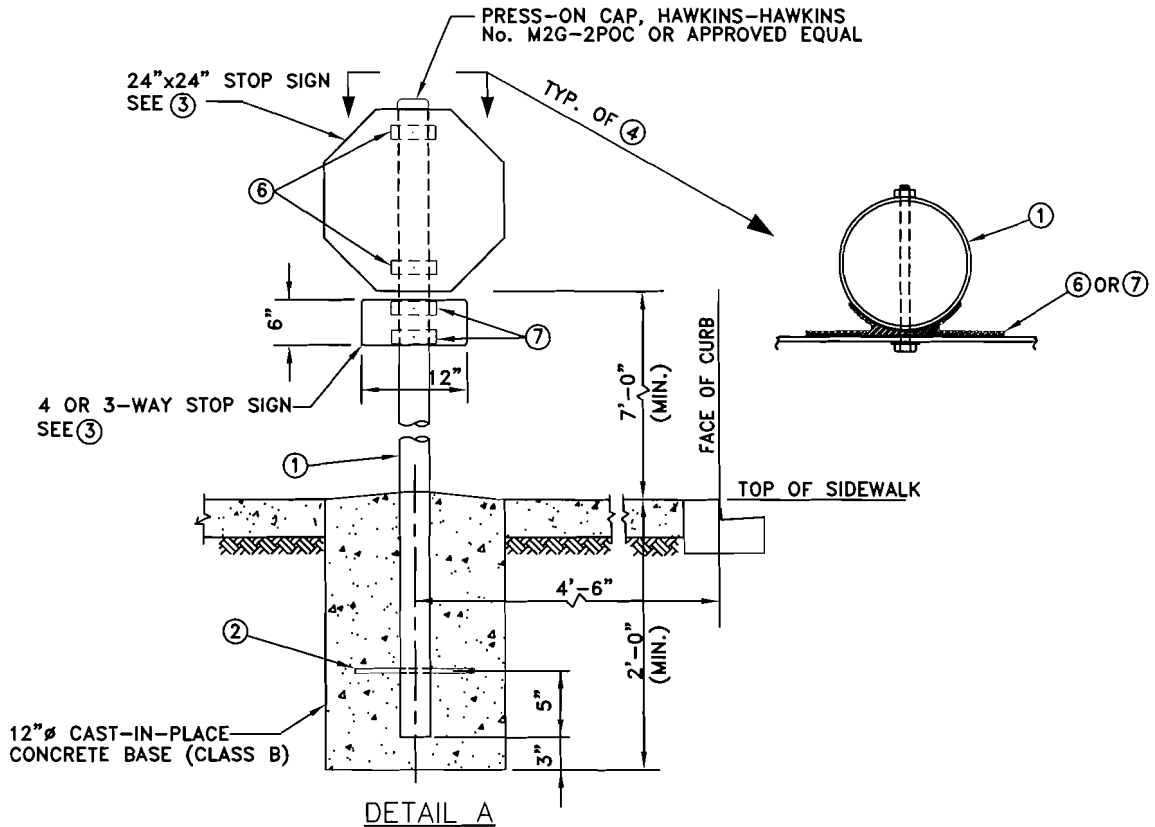

DETAIL A

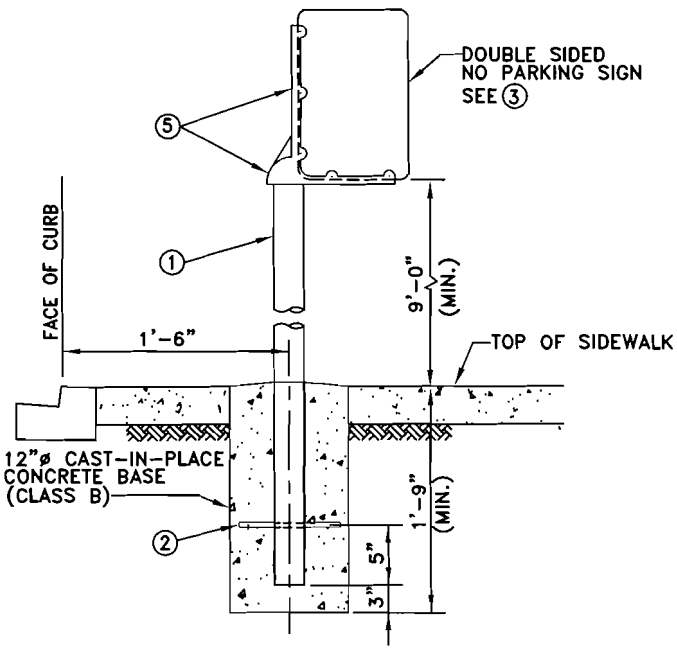

DETAIL B

LEGEND:

1. 2" I.D. GALVANIZED STEEL PIPE, SCHEDULE 40.
2. 5/16"ø x 8" LONG STEEL BAR INSERTED THROUGH THE DRILLED HOLE IN THE PIPE.
3. HAWKINS-HAWKINS DOUBLE FACE "ALUMA-SIGNS" (REFLECTORIZED) OR APPROVED EQUAL.
   ALL PARKING SIGNS TO BE MOUNTED ON LIGHT POLES TO BE DOUBLE SIDED WITH BANDING MOUNT, BAND TO BE HAWKINS PART NO. HPN-127. BUCKLE TO BE HAWKINS PART NO. HPN-128 OR APPROVED EQUAL. USE 2 BUCKLES PER SIGN.
4. SIGN SADDLE, HAWKINS NO.M2G-S2S OR APPROVED EQUAL.
5. HAWKINS-HAWKINS ALUMINUM L-BRACKET NO. M2-2LB OR APPROVED EQUAL.
6. HAWKINS-HAWKINS CLAMP NO. M2G-S2S WITH 5/16"øx3" LONG BOLTS , 5/16" TUFF TORQ HEX NUT AND 1 1/2"ø WASHER OR APPROVED EQUAL.
7. HAWKINS-HAWKINS CLAMP NO. M2G-S2S WITH 5/16"øx3" LONG BOLTS , 5/16" TUFF TORQ HEX NUT AND 7/8"ø WASHER OR APPROVED EQUAL.

NOTE:

PRIOR TO ORDERING THE STREET SIGNS, VERIFY WITH THE ENGINEER THE EXACT LOCATION AND SIZE. MINIMUM 36" PEDESTRIAN ACCESS MUST BE MAINTAINED AT ALL TIME.

CITY OF DALY CITY, CALIFORNIA — DEPARTMENT OF PUBLIC WORKS

TYPICAL TRAFFIC SIGNS FABRICATION AND INSTALLATION

DRAWN BY : A. TAN

DATE: 6/03

APPROVED BY: MP Sharma, CITY ENGINEER

STANDARD DRAWING NO. S-20

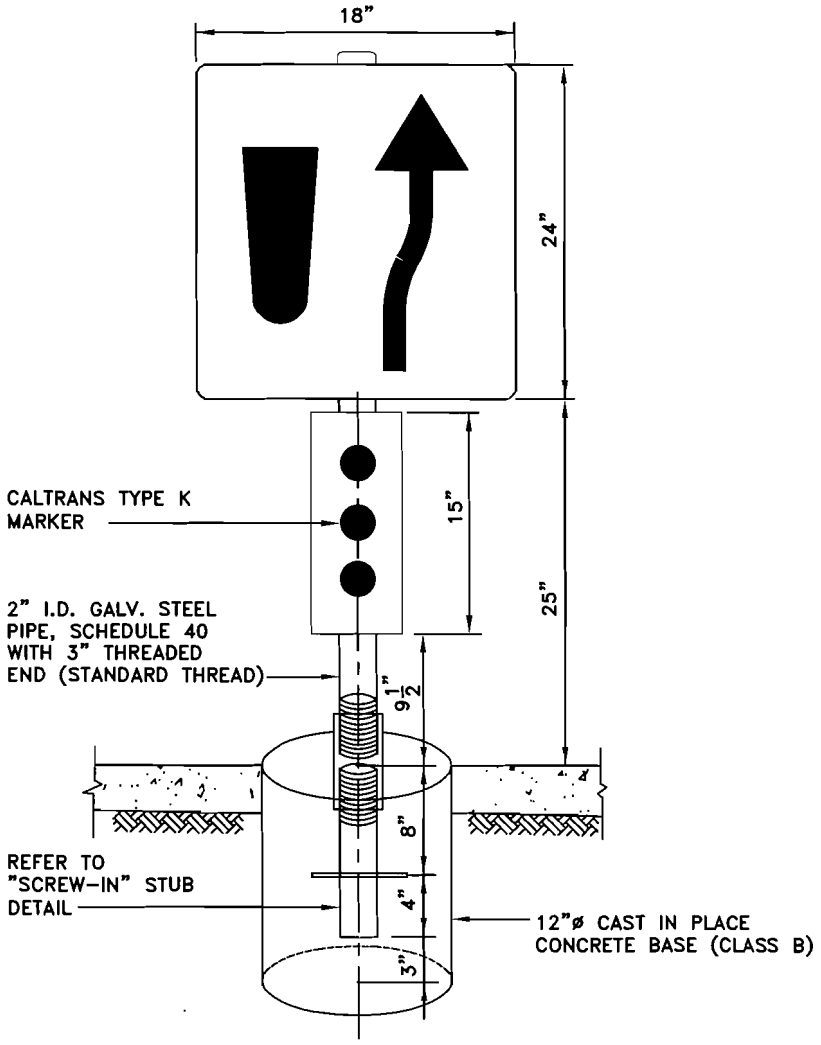

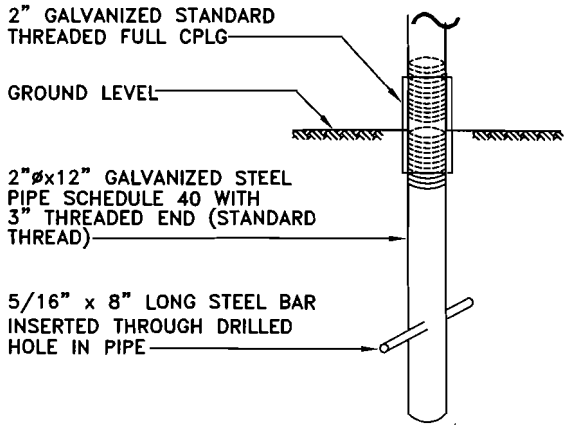

"SCREW-IN" STUB DETAIL

CITY OF DALY CITY, CALIFORNIA — DEPARTMENT OF PUBLIC WORKS

TRAFFIC SIGN – MEDIAN INSTALLATION

DRAWN BY : A. TAN

DATE: 6/03

APPROVED BY: MP Sharma, CITY ENGINEER

STANDARD DRAWING NO. S-21

DETAIL 1 – SINGLE YELLOW CENTERLINE

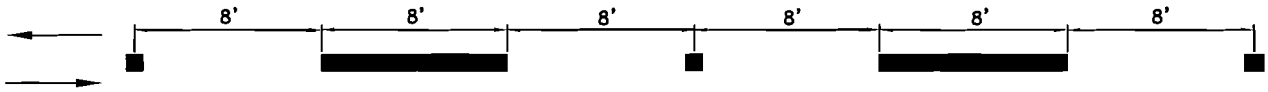

DETAIL 1A – SINGLE YELLOW CENTERLINE

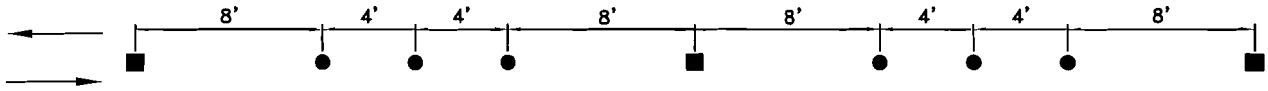

DETAIL 2 – DOUBLE YELLOW CENTERLINE

DETAIL 2A – DOUBLE YELLOW CENTERLINE

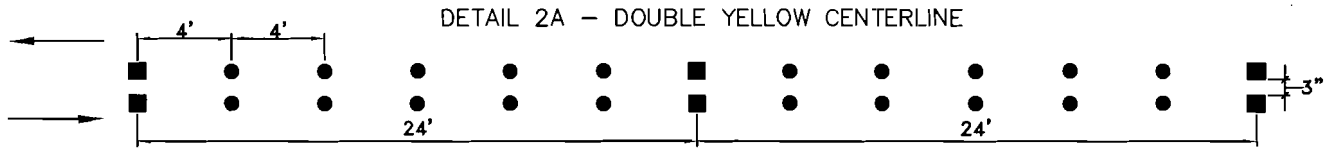

DETAIL 3 – WHITE LANE LINE

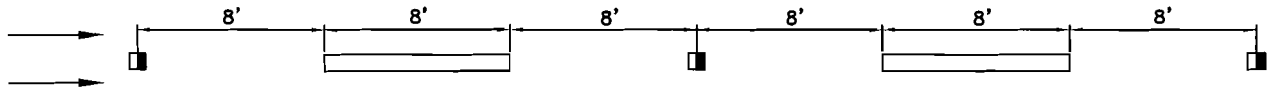

DETAIL 3A – WHITE LANE LINE

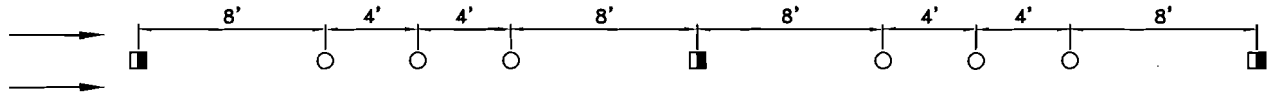

DETAIL 4 – CHANNELIZING LINE

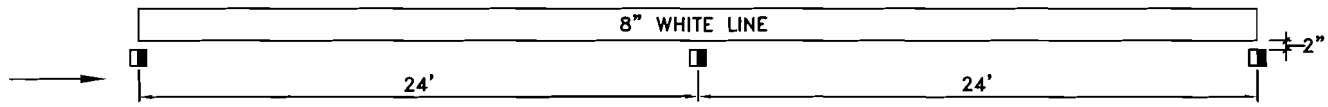

DETAIL 4A – CHANNELIZING LINE

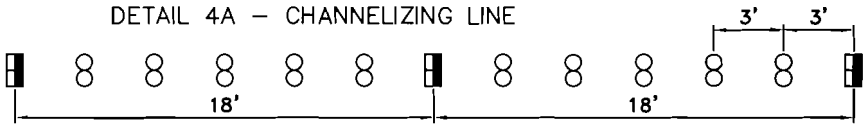

LEGEND

- ● NON-REFLECTIVE YELLOW MARKER
- ○ NON-REFLECTIVE WHITE MARKER
- ■ TWO-WAY REFLECTIVE YELLOW MARKER
- ◨ ONE-WAY REFLECTIVE WHITE MARKER
- ← DIRECTION OF TRAVEL
- ▬ 4" YELLOW LINE, THERMOPLASTIC
- ▭ 4" OR 8" WHITE LINE, THERMOPLASTIC

NOTES:

1. REFER TO STATE STANDARD SPECIFICATIONS FOR SPECIFICATION RELATING TO TYPE AND SIZE OF MARKER, CEMENT ADHESIVE AND THERMOPLASTIC STRIPES.
2. PLACE TWO-WAY BLUE MARKER FRONTING EACH FIRE HYDRANT 0.75' OFF STREET CENTERLINE ON FIRE HYDRANT SIDE.

CITY OF DALY CITY, CALIFORNIA — DEPARTMENT OF PUBLIC WORKS

TRAFFIC STRIPING MARKERS

DRAWN BY : A. TAN

DATE: 6/03

APPROVED BY: MPSharma, CITY ENGINEER

STANDARD DRAWING NO. S-22

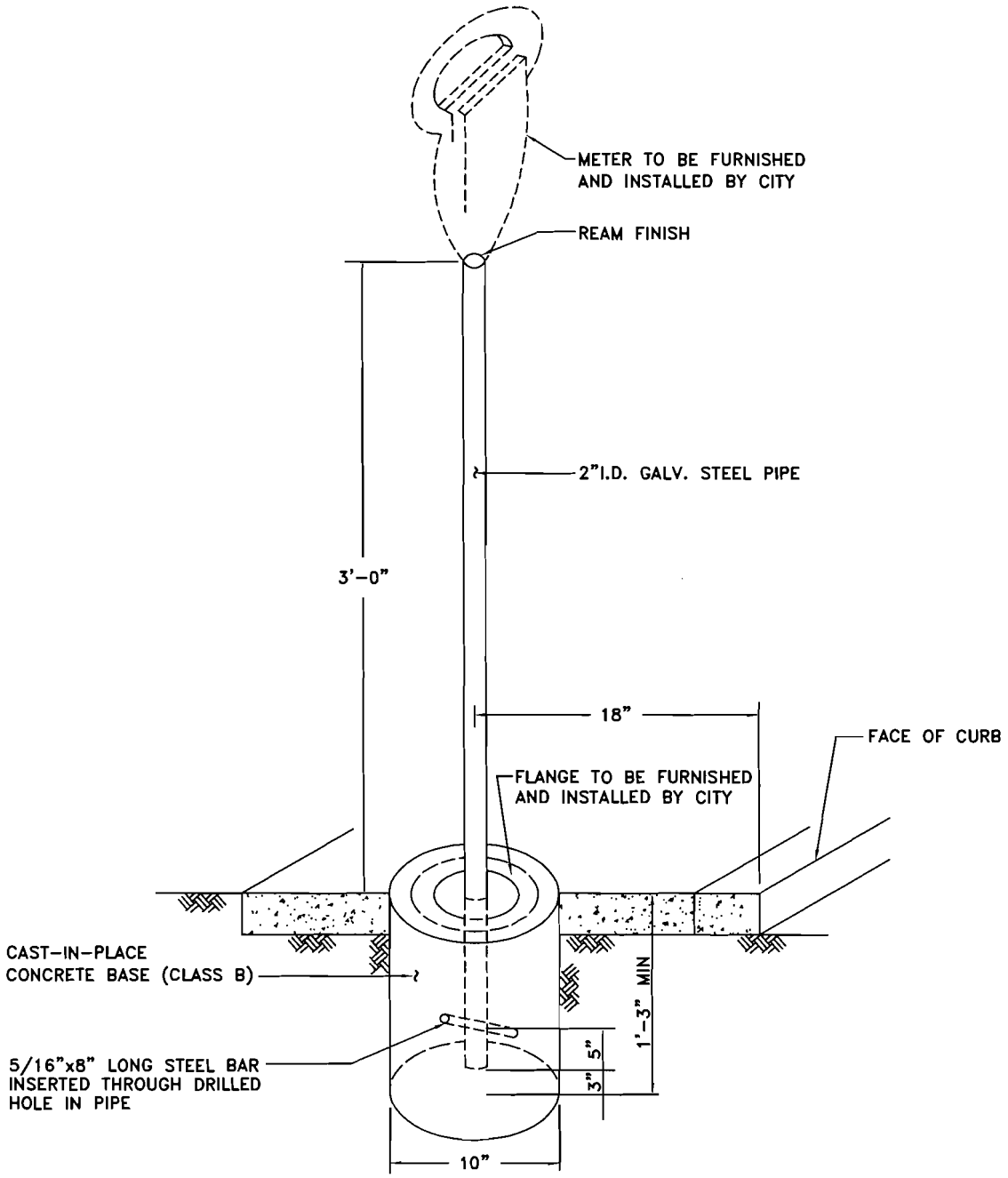

NOTES:

LOCATION OF PARKING METERS SHALL BE APPROVED BY THE CITY ENGINEER BEFORE THEIR INSTALLATION. LOCATION OF METER POST SHALL NOT INTERFERE WITH THE INDRESS/EGRESS FROM THE VEHICLE OR TO THE ADJACENT PROPERTY.

CITY OF DALY CITY, CALIFORNIA — DEPARTMENT OF PUBLIC WORKS

DRAWN BY : A. TAN

PARKING METER POST

DATE: 6/03

APPROVED BY: MPSharma, CITY ENGINEER

STANDARD DRAWING NO. S-23

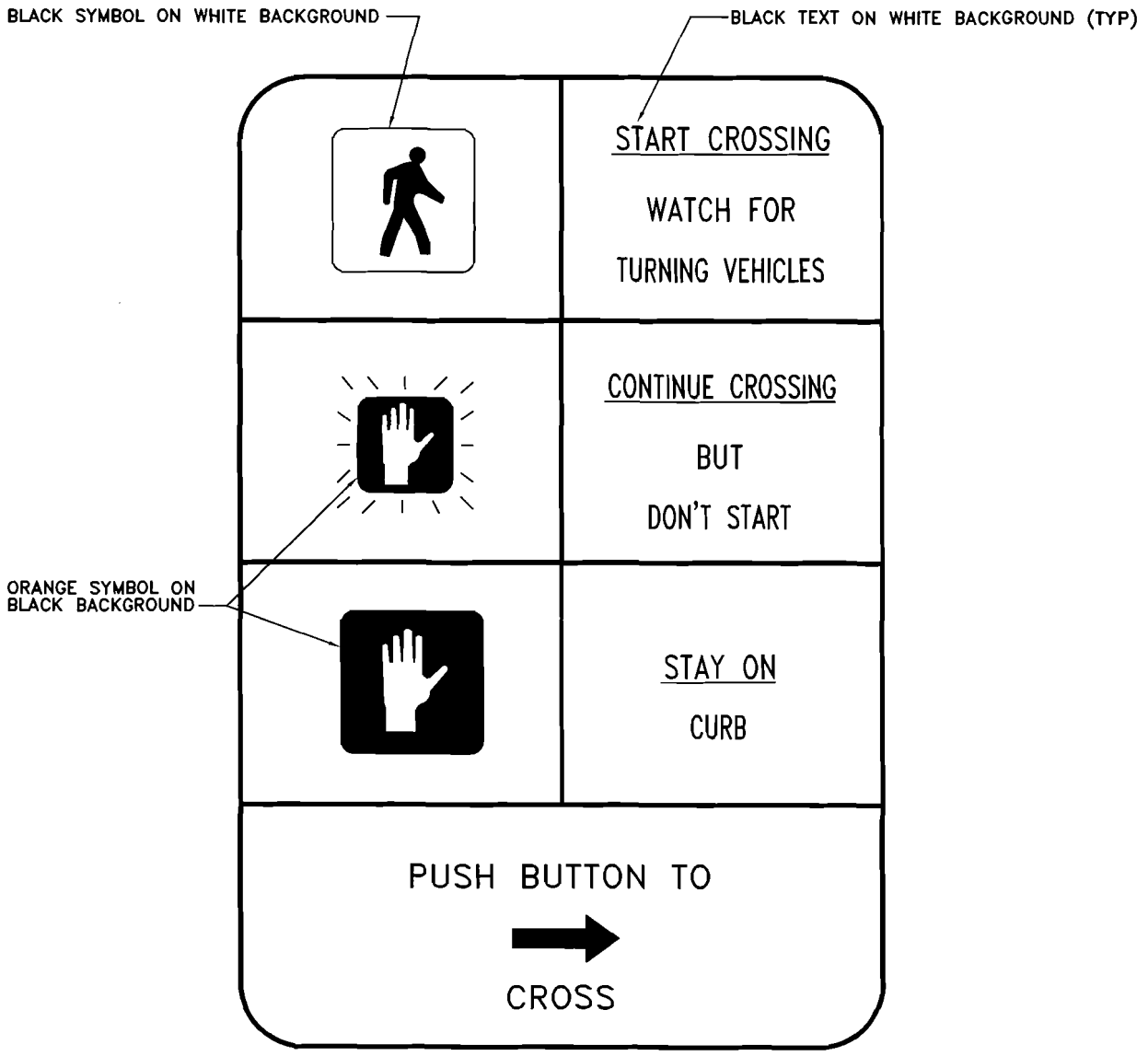

NOTES:

1. SEE PROJECT PLANS FOR ARROW ORIENTATIONS
2. SEE STATE PLANS AND SPECIFICATIONS AND SECTION 86 OF THE STATE STD. SPECIFICATIONS FOR SIZE AND MATERIAL CONSTRUCTION.
3. SEE STATE STD PLAN ES-5C. UNLESS OTHERWISE SPECIFIED, PEDESTRIAN PUSH BUTTON ARRANGEMENT SHALL BE TYPE B, MODIFIED FOR CONFORMANCE WITH CURRENT ADA REQUIREMENTS.

CITY OF DALY CITY, CALIFORNIA — DEPARTMENT OF PUBLIC WORKS

PEDESTRIAN PUSH BUTTON INSTRUCTIONS

DRAWN BY : A.TAN/AC

DATE: 6/03

APPROVED BY: MP Sharma, CITY ENGINEER

STANDARD DRAWING NO. S-24

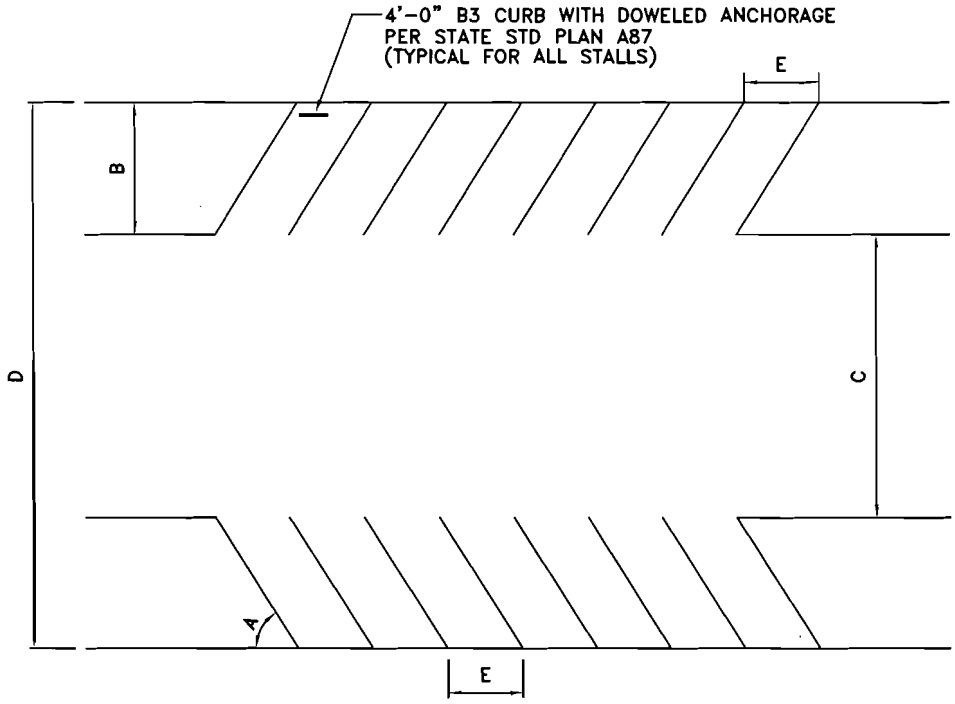

ANGLE A (DEG)	STALL B (COMPACT)	STALL B (REG)	AISLE C (COMPACT)	AISLE C (REG)	OVERALL WIDTH D (COMPACT)	OVERALL WIDTH D (REG)	LAYOUT DIMENSIONS E ALL CARS
30	14'	17'	12'	12'	40'	46'	17'-0"
45	17'	20'	13'	14'	47'	54'	12'-0"
60	18'	21'	18'	20'	54'	62'	9'-11"
90	16'	19'	24'	26'	56'	64'	8'-6"

NOTES:

1. FOR PARALLEL PARKING:
   TEN-FOOT MINIMUM AISLE, ONE AISLE REQUIRED PER TRAFFIC DIRECTION. SPACES SHALL BE 8'-6" BY 24'-0" FOR REGULAR SIZE CARS, 8'-6" BY 20'-0" FOR COMPACT CARS.

2. UNLESS OTHERWISE SPECIFIED, LINES SHALL BE MADE WITH 4" WIDE WHITE THERMOPLASTIC, IN CONFORMANCE WITH STATE SPECIFICATION SECTION 84.

3. B3 CURB BUMPER SHALL BE ANCHORED WITH 2-#10x10" STEEL DOWELS, EACH DOWEL 6"± FROM END OF CURB.

CITY OF DALY CITY, CALIFORNIA — DEPARTMENT OF PUBLIC WORKS

OFF STREET PARKING STALL CRITERIA

DRAWN BY : A. TAN

DATE: 6/03

APPROVED BY: MPSharma, CITY ENGINEER

STANDARD DRAWING NO. S-25

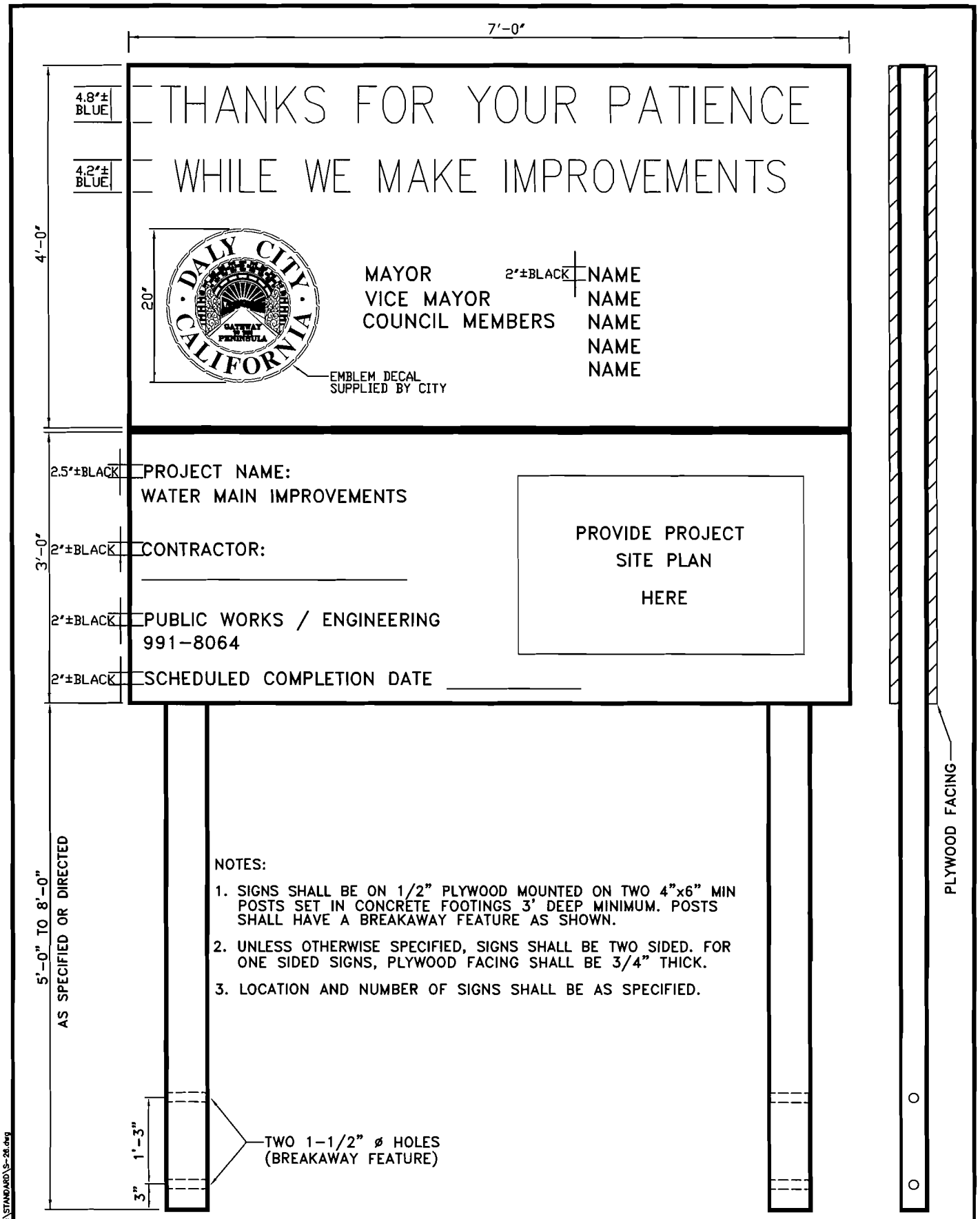

CITY OF DALY CITY, CALIFORNIA — DEPARTMENT OF PUBLIC WORKS

CONSTRUCTION PROJECT IDENTIFICATION SIGN

DRAWN BY : A. TAN

DATE: 6/03

APPROVED BY: MP Sharma, CITY ENGINEER

STANDARD DRAWING NO. S-26

Reviser: ANDY TAN
Dwg File: H:\Staff\Andy\Misc\STANDARD\S-26.dwg
Time: 13:56:4
Date: 9/2/1999

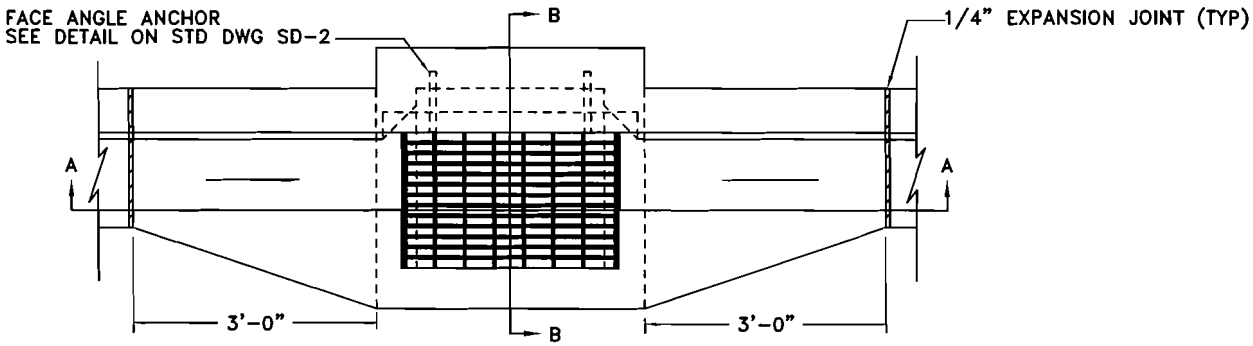

PLAN

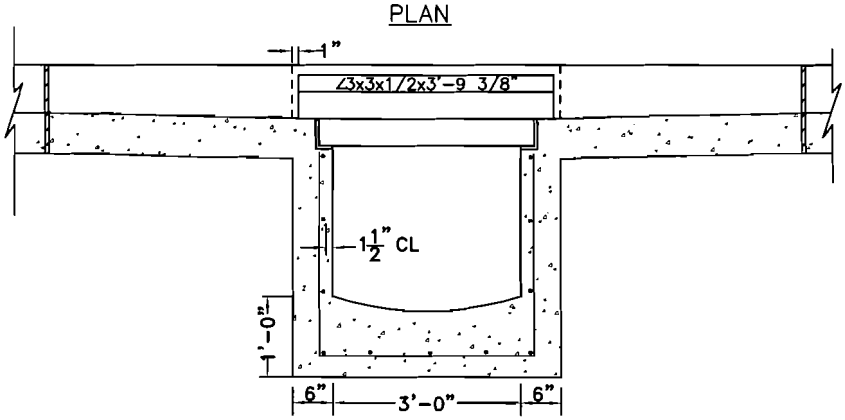

SECTION A–A

TYPE I GUTTER – LONGITUDINAL STREET GRADE LESS THAN 5%

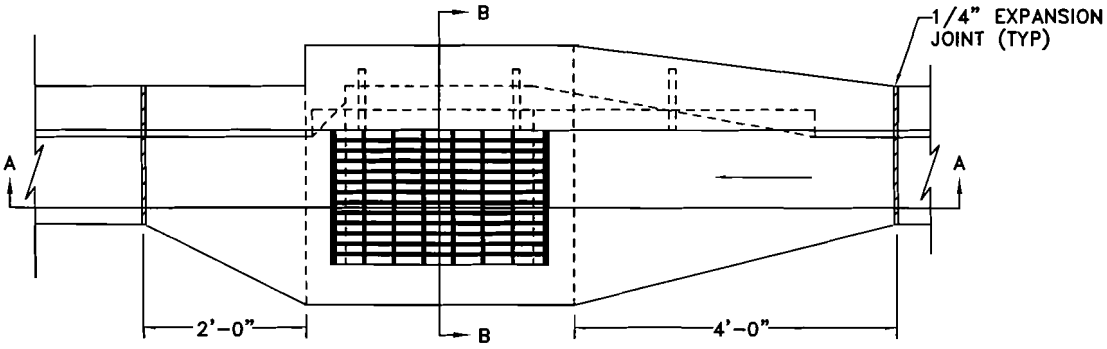

PLAN

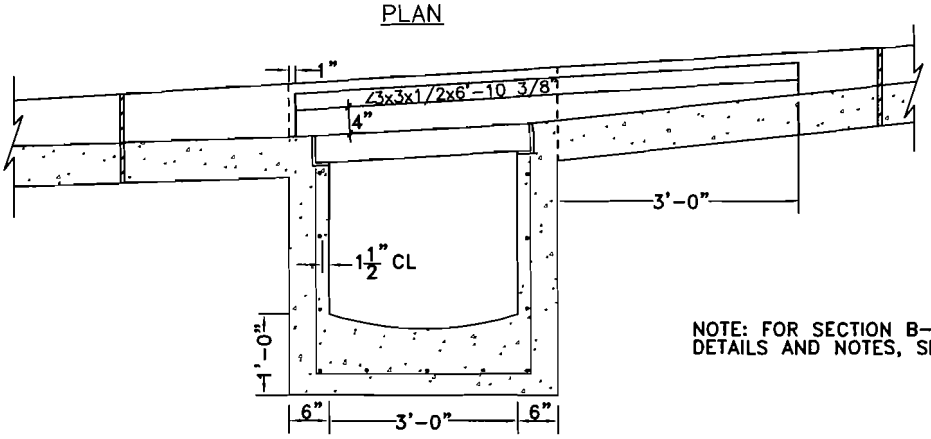

NOTE: FOR SECTION B–B, CONSTRUCTION DETAILS AND NOTES, SEE STD. DWG. SD-2.

SECTION A–A

TYPE II GUTTER – LONGITUDINAL STREET GRADE 5% AND GREATER

CITY OF DALY CITY, CALIFORNIA — DEPARTMENT OF PUBLIC WORKS

CATCH BASIN–PLAN, SECTION AND GUTTER DEPRESSIONS

DRAWN BY : A. TAN

DATE: 6/03

APPROVED BY: MP Sharma, CITY ENGINEER

STANDARD DRAWING NO. SD-1

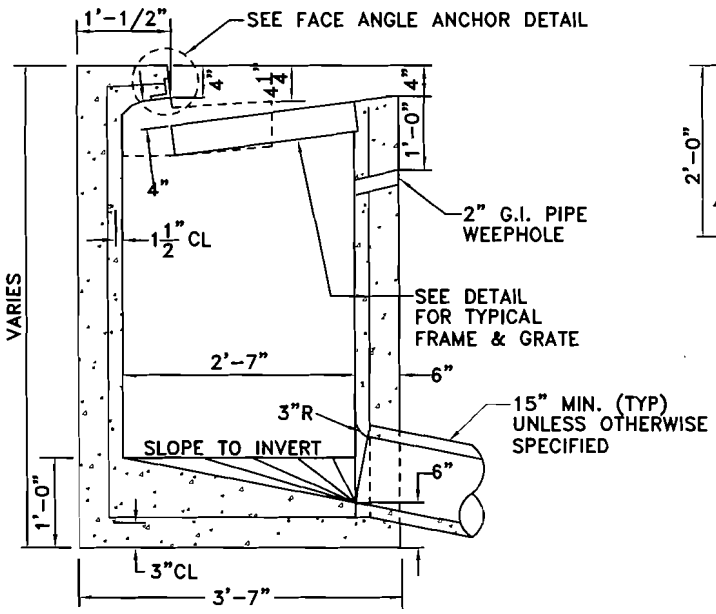

SECTION B-B

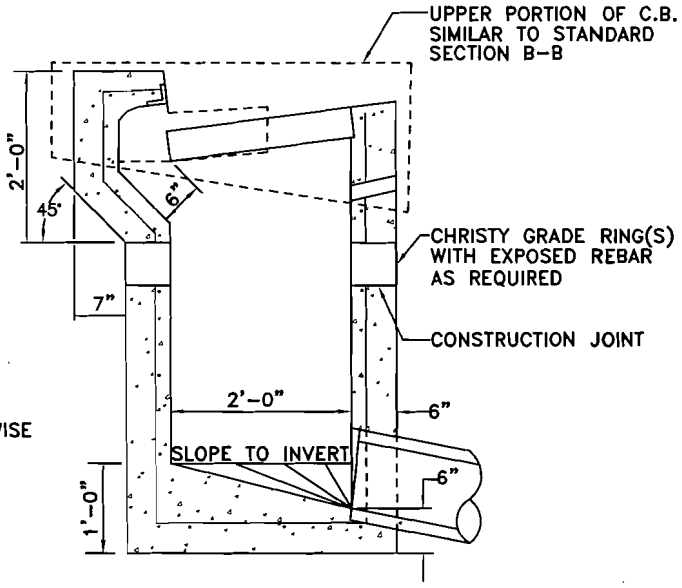

SECTION B-B
ALTERNATIVE CONSTRUCTION

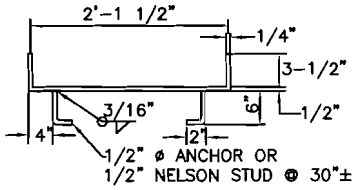

SECTION D-D

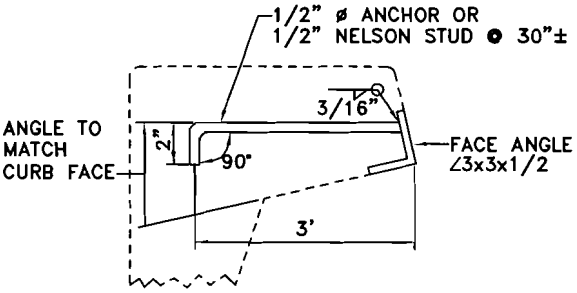

FACE ANGLE ANCHOR DETAIL

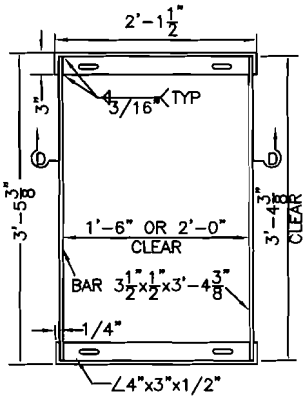

TYPICAL FRAME

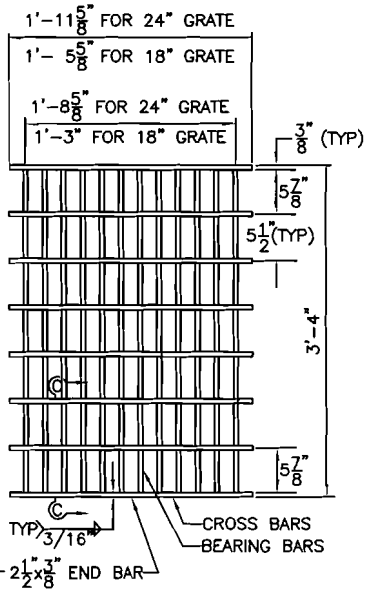

TYPICAL GRATE

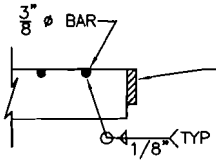

SECTION C-C

NOTES:

1. GRATE, FRAMES, AND FACE ANGLES SHALL BE HOTDIPPED GALVANIZED AFTER FABRICATION IN ACCORDANCE WITH ASTM SPEC. NO. A-123.
2. REINFORCING STEEL IN WALLS SHALL BE #4 BARS AT 12"± O.C. EACH WAY.
3. BEARING BARS FOR GRATES SHALL BE $3\frac{1}{2}$" x $\frac{3}{8}$" BARS ON $1\frac{7}{8}$" CENTER.
4. USE NO. 12 BARS FOR 24" GRATE, NO. 9 BARS FOR 18" GRATE. 24" GRATE WEIGHT 192 LBS, 18" GRATE WEIGHT 145 LBS.
5. 3/8"ø CROSS BARS FOR GRATES MAY BE FILLET WELDED, RESISTANCE WELDED OR ELECTROFORGED TO BEARING BARS.
6. ALL CONCRETE SHALL BE STATE CLASS A (6 SACK MIX).
7. PRECAST OR CAST-IN-PLACE CONCRETE UNIT BASED ON STATE TYPE "GO" IS ACCEPTABLE ALTERNATE.

CITY OF DALY CITY, CALIFORNIA — DEPARTMENT OF PUBLIC WORKS

CATCH-BASIN SECTION AND DETAILS

DRAWN BY : A. TAN

DATE: 6/03

APPROVED BY: MP Sharma, CITY ENGINEER

STANDARD DRAWING NO. SD-2

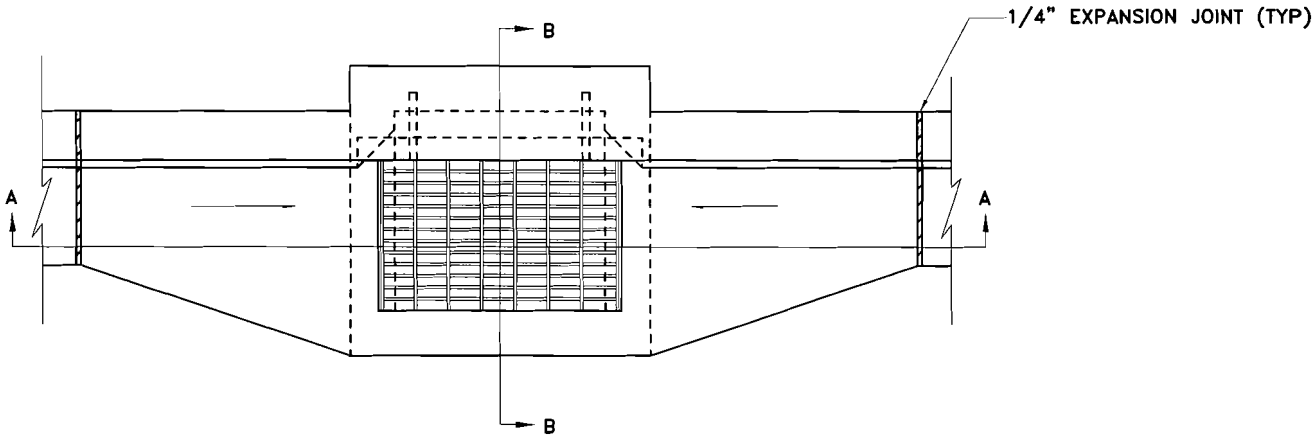

PLAN

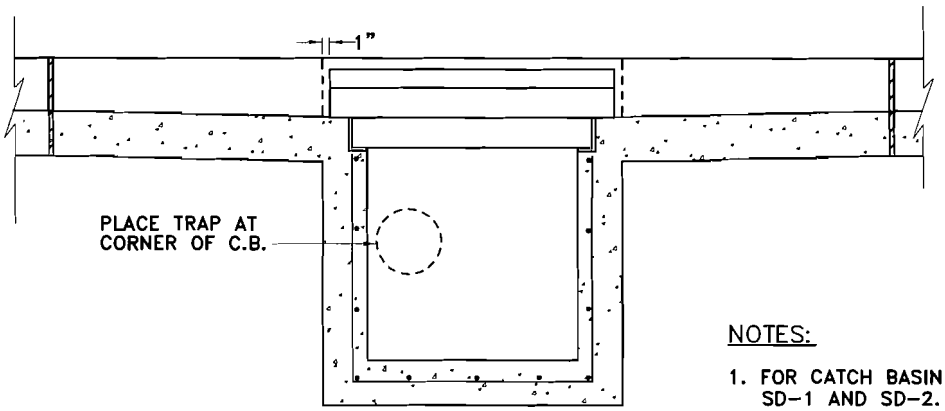

SECTION A–A

NOTES:

1. FOR CATCH BASIN CONSTRUCTION, SEE STD. DWG. SD–1 AND SD–2.
2. CATCH BASIN WITH TYPE I GUTTER IS SHOWN; TRAP INSTALLATION WITH TYPE II GUTTER IS THE SAME.
3. AS ALTERNATES, CATCH BASINS MAY BE PRECAST OR CAST–IN–PLACE UNITS BASED ON STATE TYPE "GO".

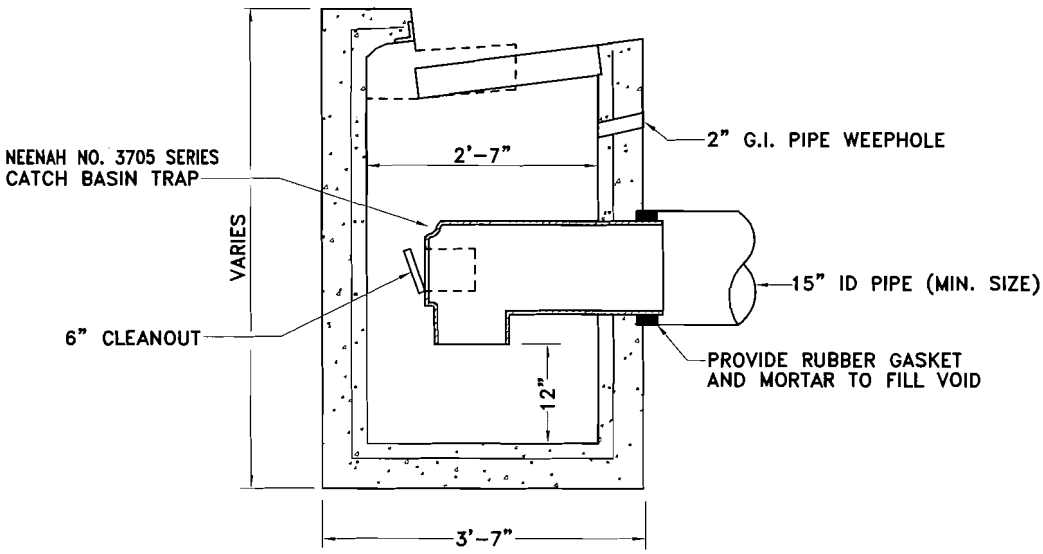

SECTION B–B

CITY OF DALY CITY, CALIFORNIA — DEPARTMENT OF PUBLIC WORKS

DRAWN BY : A. TAN

DATE: 6/03

CATCH–BASIN WITH TRAP AND CLEANOUT FOR COMBINED SEWER / STORM SYSTEMS

APPROVED BY: MP Sharma, CITY ENGINEER

STANDARD DRAWING NO. SD–3

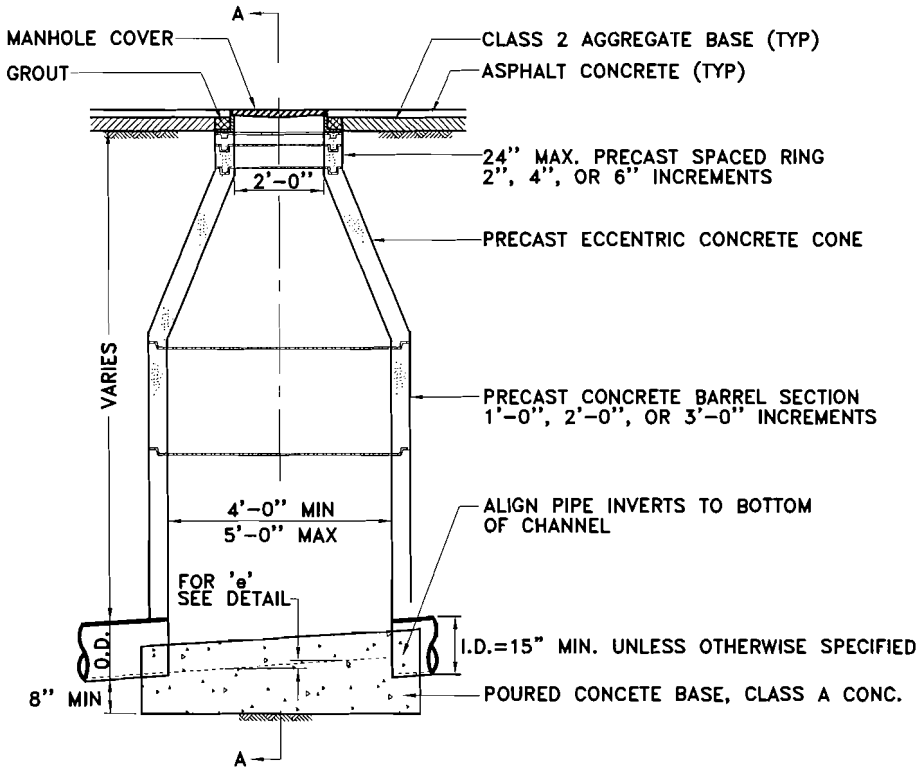

SECTION A–A

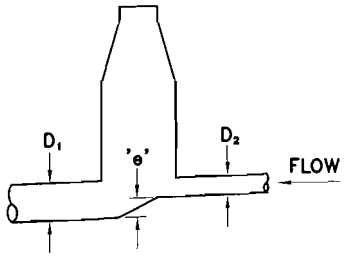

'e'= (D_1 – D_2) OR 0.08' MIN.

RELATIVE CHANNEL INVERTS

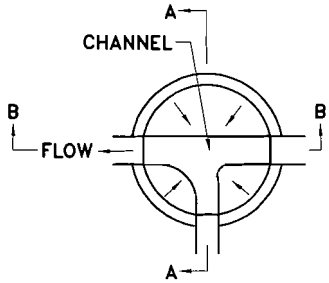

CHANNEL DETAIL

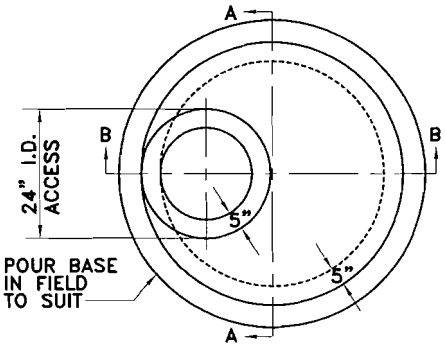

PLAN

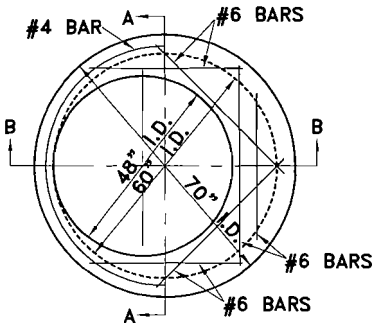

PLAN

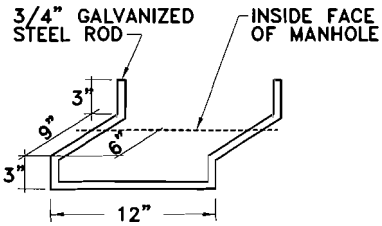

MANHOLE STEP

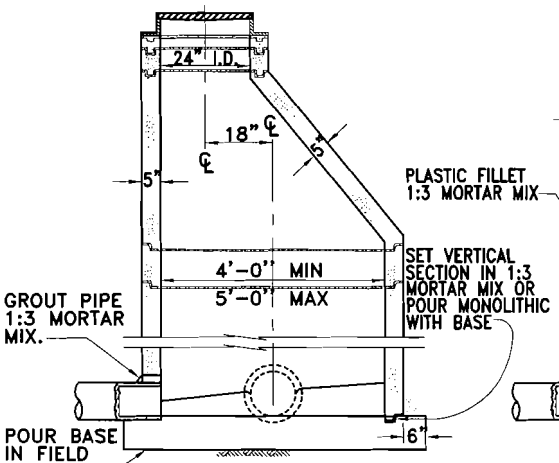

SECTION B–B
OPTION 1

SEE PROJECT SPECIFICATIONS
FOR OPTION CHOICE

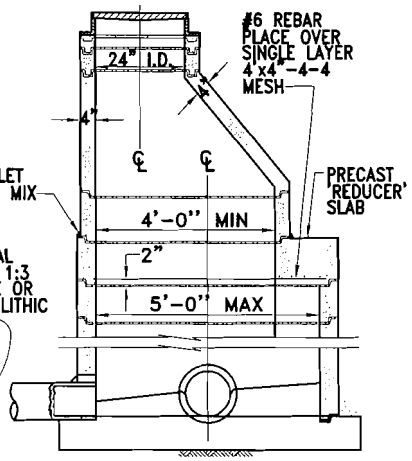

SECTION B–B
OPTION 2

NOTES:

1. PROVIDE 24" C.I. HEAVY DUTY NON-ROCKING STREET MANHOLE FRAME & COVER – PHOENIX IRON WORKS NO. P-1090 OR APPROVED EQUAL. 'STORM DRAIN' TO BE INSCRIBED ON COVER.
2. MANHOLES AND SLABS SHALL MEET ASTM C478.
3. 1:3 MORTAR MIX OR RAM-NEK JOINT COMPOUND SHALL BE USED AT ALL JOINTS.
4. FOR MANHOLES FOR USE WITH SD PIPE OVER 48" DIA., SEE PROJECT DWGS.
5. FOR TYPE AND DEPTHS OF STREET SURFACING MATERIALS, SEE PROJECT DWGS.

CITY OF DALY CITY, CALIFORNIA — DEPARTMENT OF PUBLIC WORKS

STORM DRAIN MANHOLES – FOR PIPE 48" DIA OR SMALLER

DRAWN BY : A. TAN

DATE: 6/03

APPROVED BY: MP Sharma, CITY ENGINEER

STANDARD DRAWING NO. SD-4

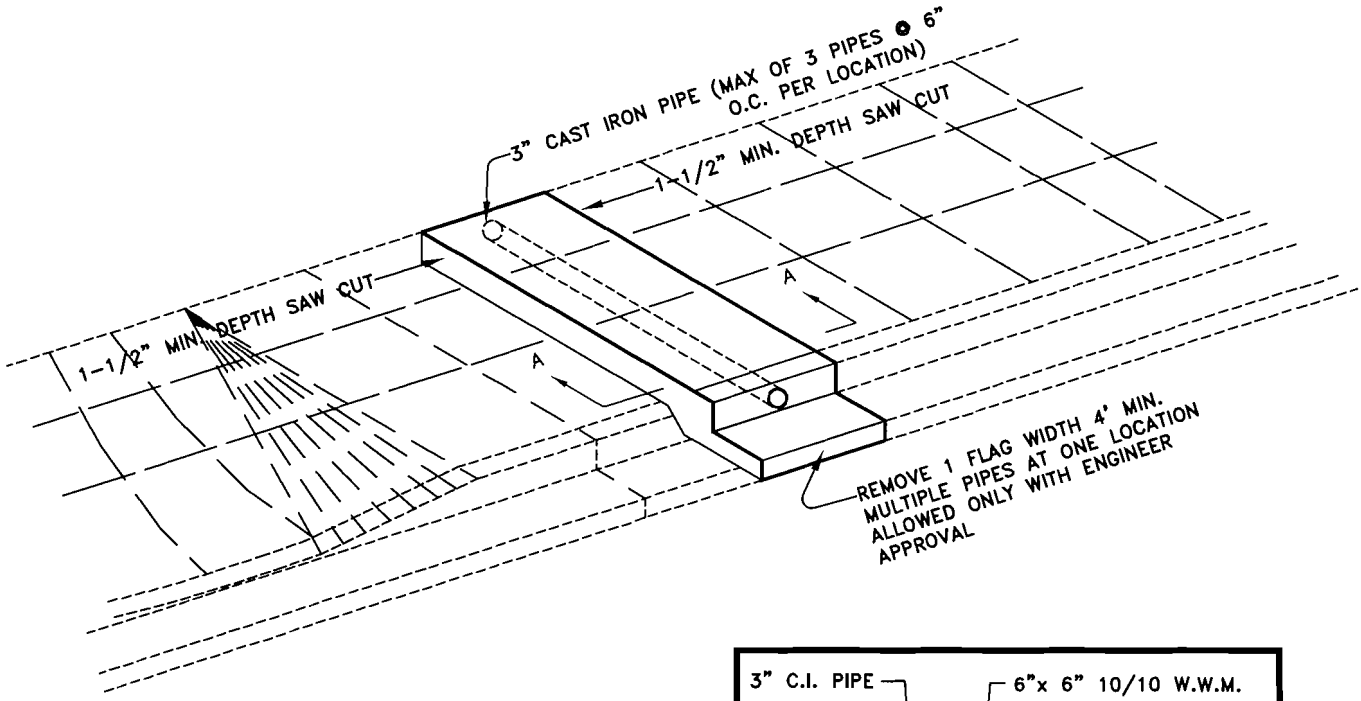

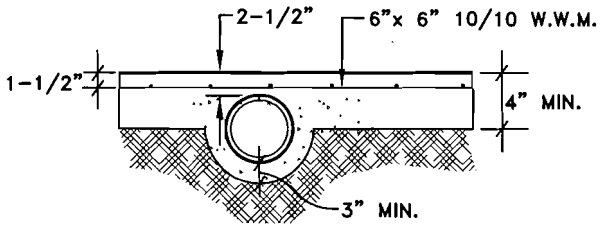

SECTION A–A

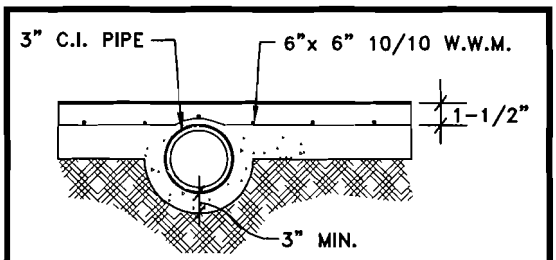

OPTION FOR 4" HIGH CURB

SECTION A–A

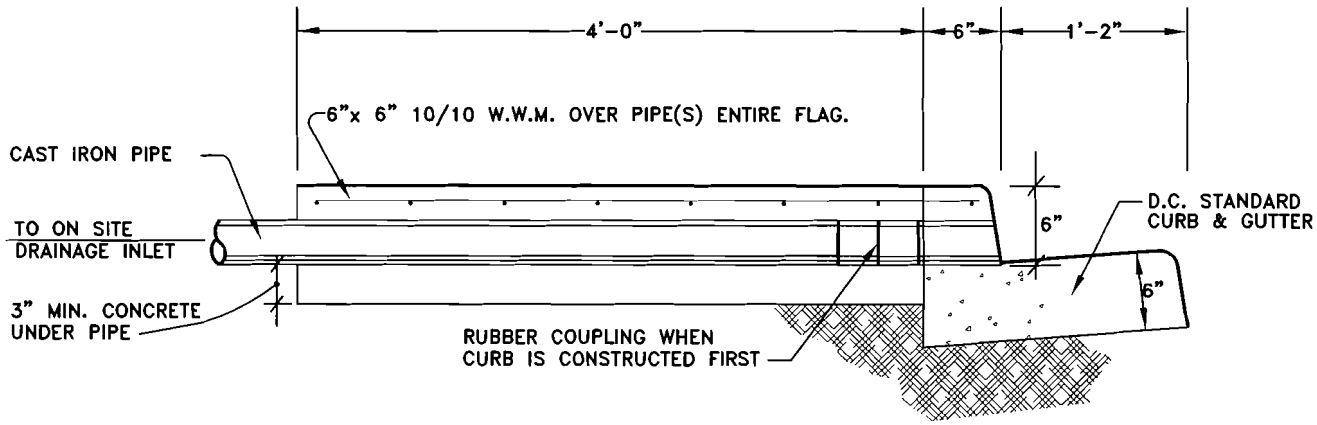

ELEVATION

CITY OF DALY CITY, CALIFORNIA — DEPARTMENT OF PUBLIC WORKS

CURB FACE DRAINAGE OUTLET

DRAWN BY : A. TAN

DATE: 6/03

APPROVED BY: MP Sharma, CITY ENGINEER

STANDARD DRAWING NO. SD-5

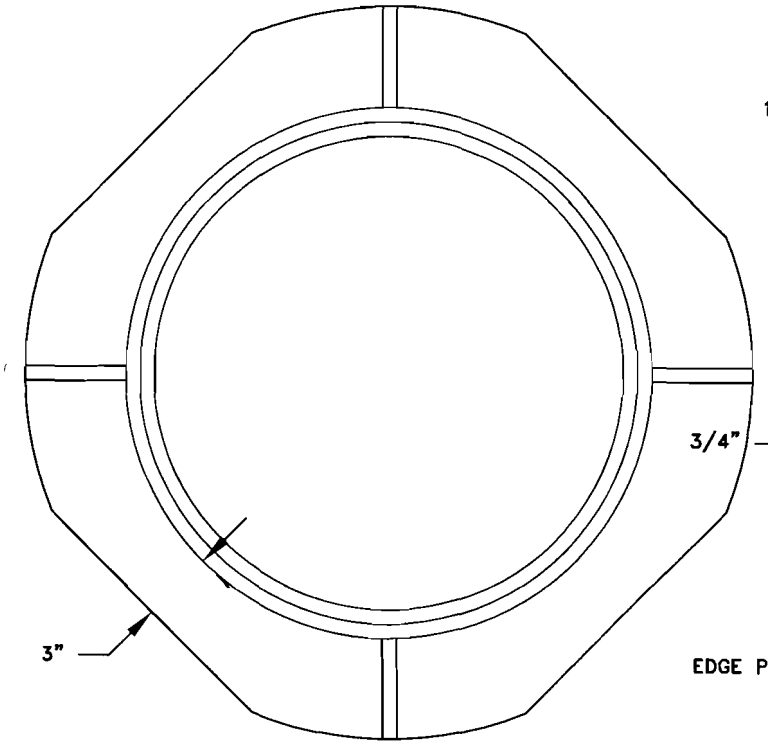

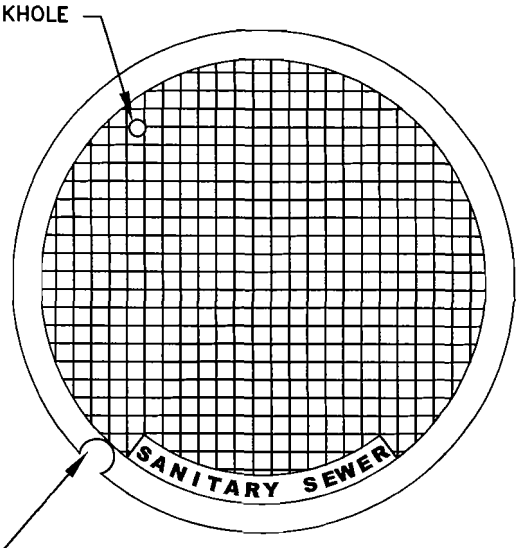

COVER TOP

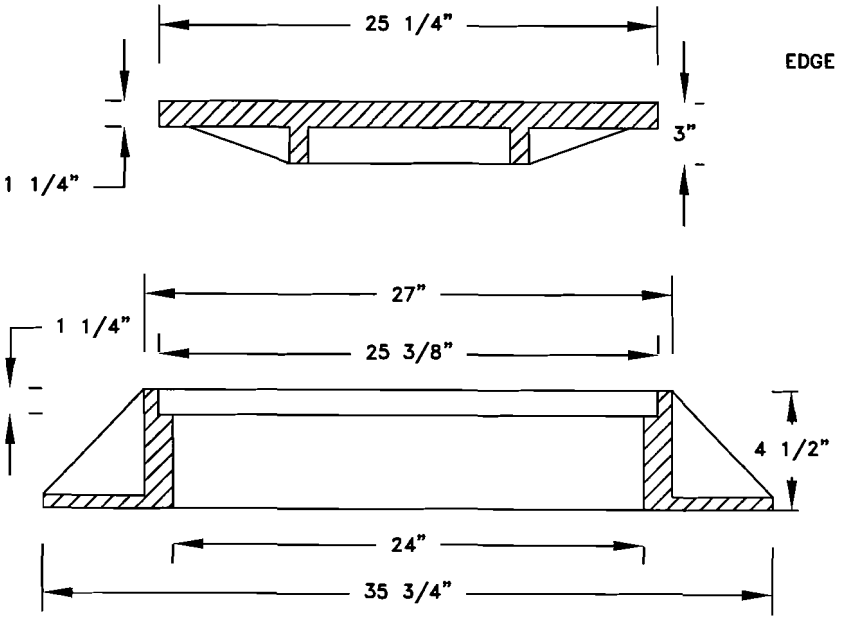

SECTION

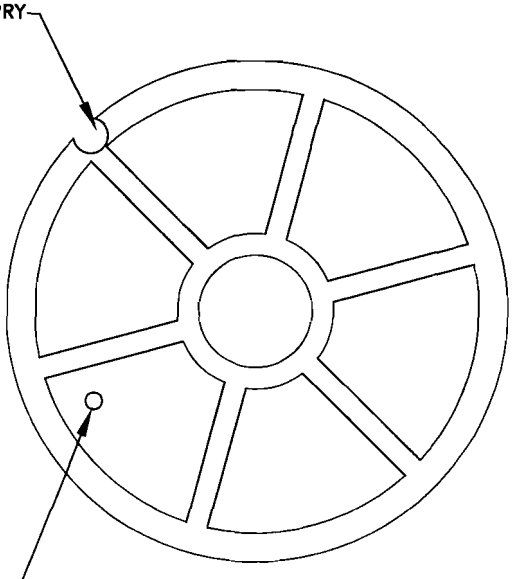

COVER BOTTOM

NOTE

1. All MATERIAL SHALL CONFORM TO ASTM SPECIFICATION A-159-70T-G3000
2. MODEL D&L No. A-1000 OR APPROVED EQUAL IS ILLUSTRATED AND ACCEPTABLE

CITY OF DALY CITY, CALIFORNIA N.S.M.C.S.D.

DRAWN BY : I. SINGH

NON-PRESSURE TYPE
MANHOLE FRAME AND COVER

DATE: 07/07

APPROVED BY: MP Sharma, CITY ENGINEER STANDARD DRAWING NO. SS-1

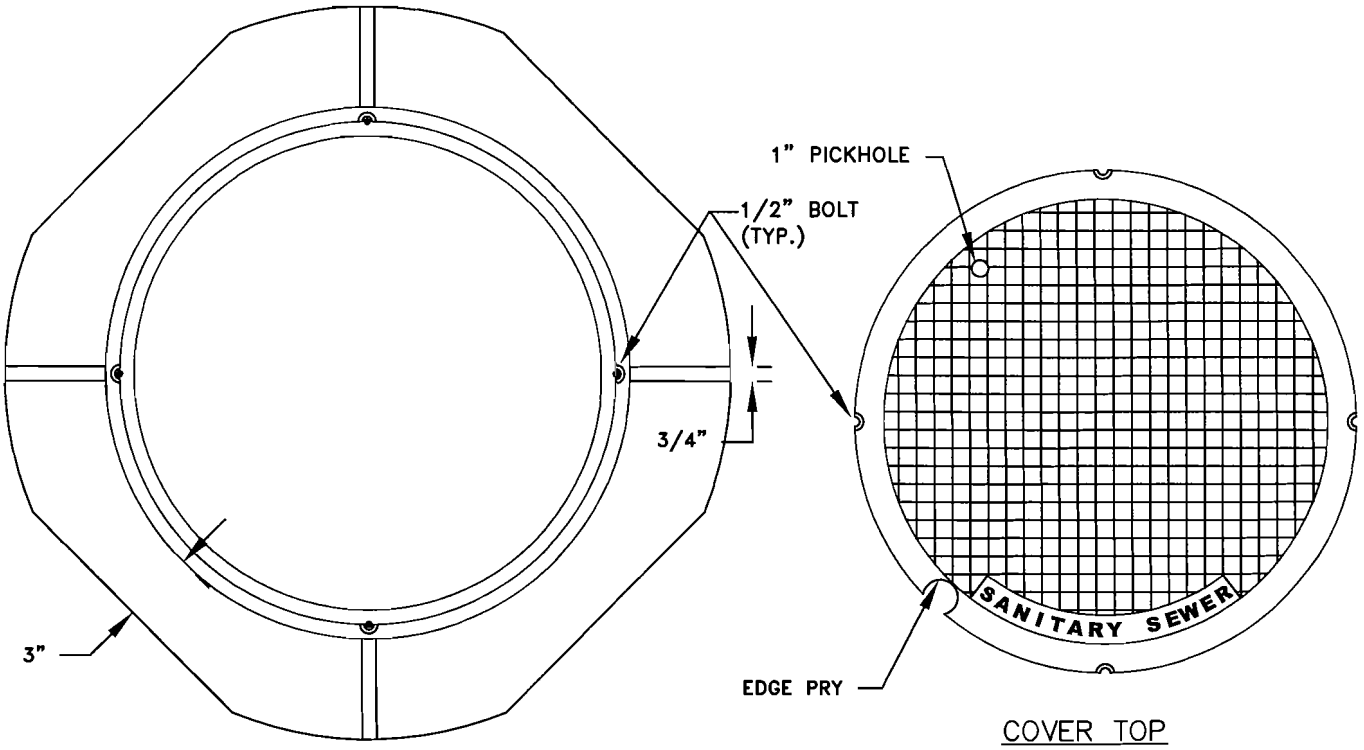

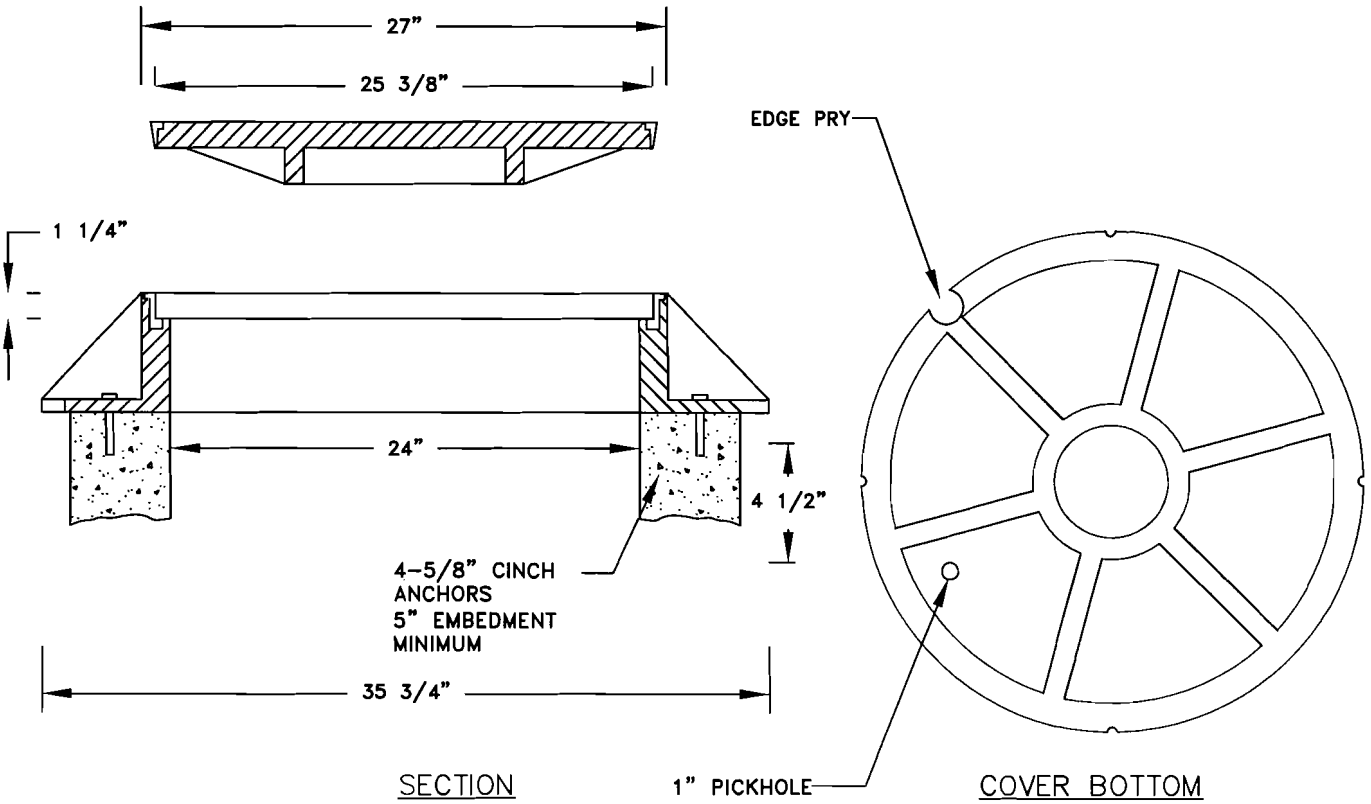

NOTE

1. MAXIMUM ALLOWABLE PRESSURE SHALL BE 10 P.S.I.
2. All MATERIAL SHALL CONFORM TO ASTM SPECIFICATION A-159-70T-G3000
3. MODEL D&L No. A-1000 BOLT-ON DESIGN FROM MANUFACTURER

CITY OF DALY CITY, CALIFORNIA N.S.M.C.S.D.

PRESSURE TYPE
MANHOLE FRAME AND COVER

DRAWN BY : I. SINGH

DATE: 07/07

APPROVED BY: MP Sharma, CITY ENGINEER STANDARD DRAWING NO. SS-2

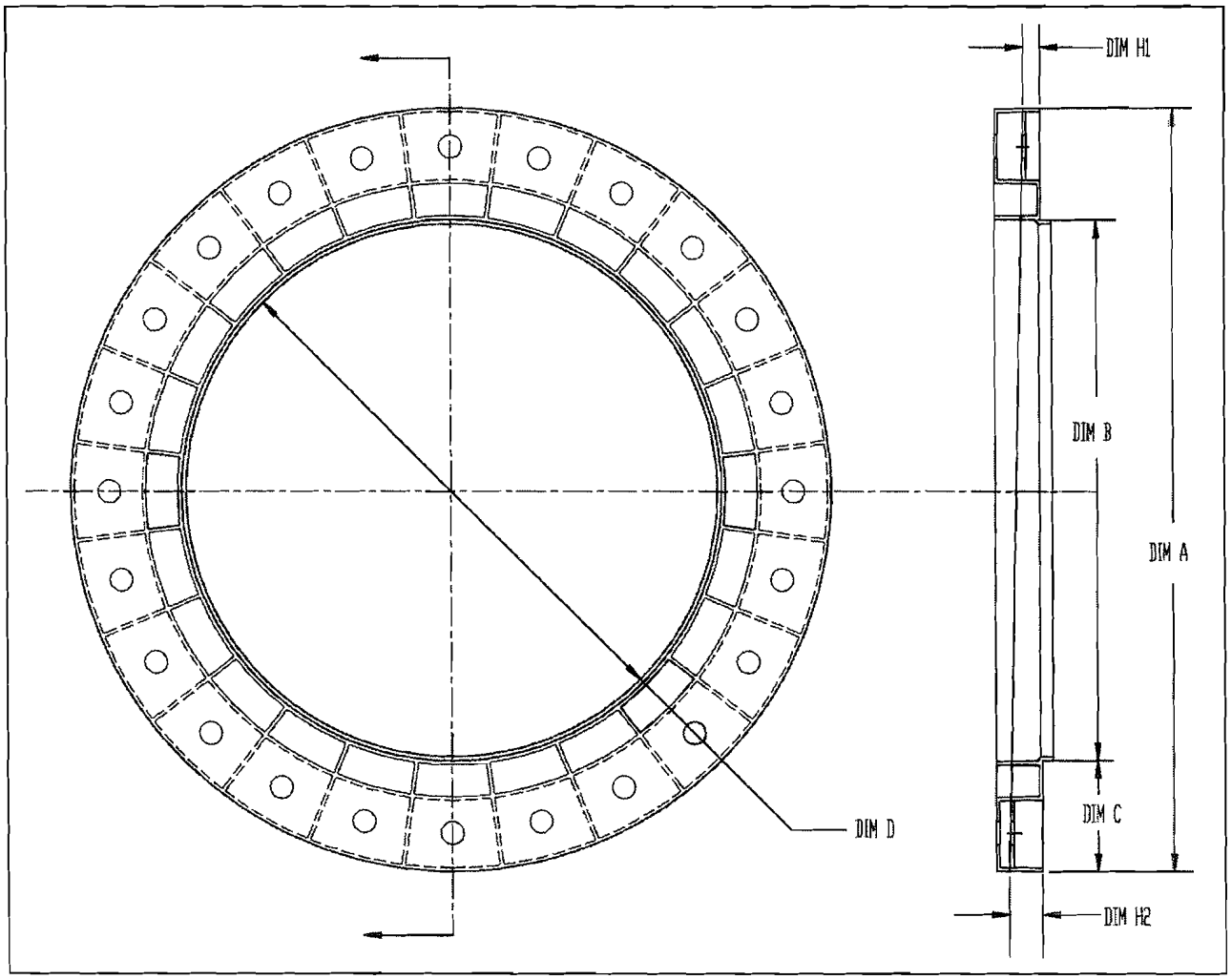

DESCRIPTION

PLASTIC INJECTION MOLDED ADJUSTMENT RING

MOLDED FROM HIGH DENSITY POLYETHYLENE AS DEFINED IN ASTM SPECIFICATION D1248

ACTUAL RESIN PROPERTIES WILL VARY ALLOWING FOR THE UTILIZATION OF A MAXIMUM PERCENT OF RECYCLED MATERIAL

THE PERCENT OF POST CONSUMER WASTE TO INDUSTRIAL WASTE WILL VARY WITH AVAILABILITY AND PROPERTY RETENTION NEEDS

COLOR, SHADE AND UNIFORMITY WILL VARY WITH THE MIX OF THE POST CONSUMER AND INDUSTRIAL WASTE MATERIALS

DIMENSIONS SHOWN ARE NOMINAL - ACTUAL SIZE WILL VARY WITHIN ALLOWABLE TOLERANCE AND REQUIRED FIT

CITY OF DALY CITY, CALIFORNIA N.S.M.C.S.D.

POLYETHYLENE MANHOLE ADJUSTMENT RING SLOPE DESIGN

DRAWN BY : JPS

DATE: 02/04 APPROVED BY: MP Sharma, CITY ENGINEER STANDARD DRAWING NO. SS-2A

N:\Staff\Iqbal Singh\STD PLANS -Modifications\SS-2A.dwg, 02/02/2004 09:26:23 AM

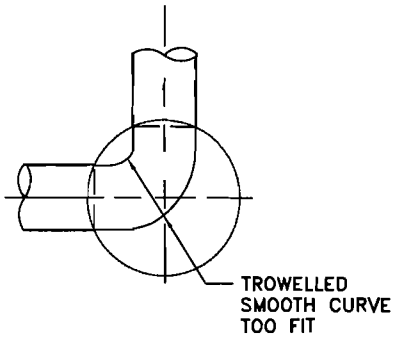

TYPICAL CURVED MANHOLE

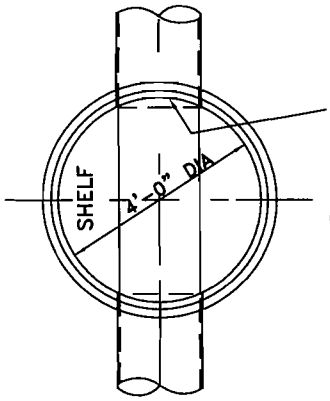

NOTE:
THE TOP HALF OF THE PVC PIPE SHALL BE REMOVED TO THE CONTOUR OF THE INSIDE OF THE M.H. AND THE BROKEN EDGES SHALL BE PLASTERED SMOOTH WITH CEMENT. -- TYP. FOR ALL MANHOLES

TYPICAL STRAIGHT THROUGH MANHOLE

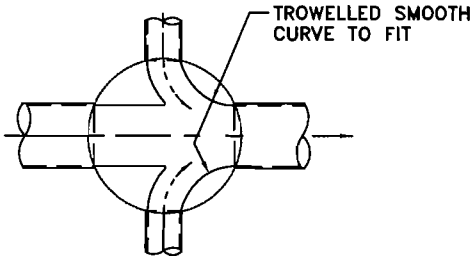

TYP. MANHOLE WITH 2 BRANCHES

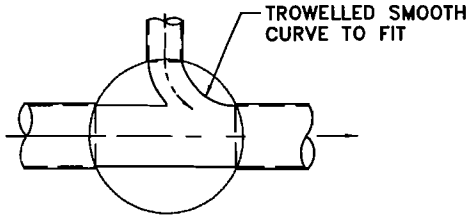

TYP. MANHOLE WITH 1 BRANCH

PLANS–CHANNELIZED M.H. BOTTOMS

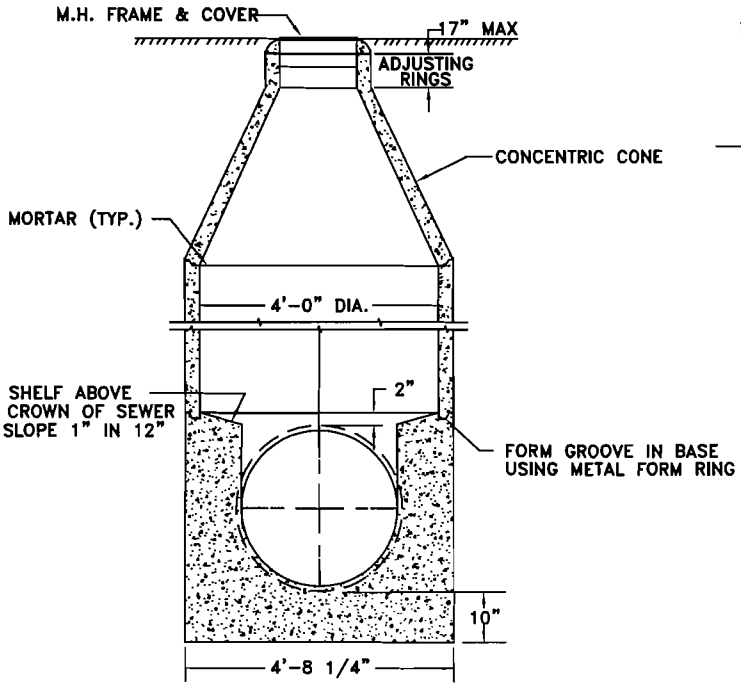

TYPICAL SECTION
BARREL DIAMETERS VARY (SEE SPECS)

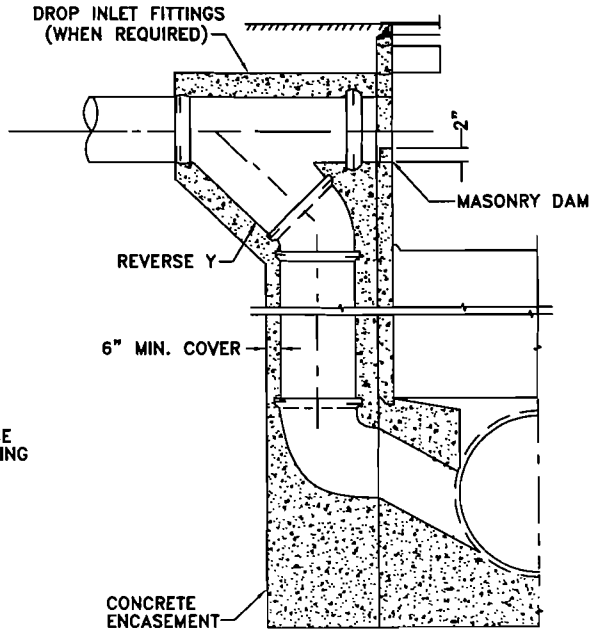

SECTION – WITH DROP INLET
NOTE: PRECAST MANHOLE SECTIONS SHALL BE FURNISHED WITHOUT STEPS OR LADDER RUNGS

CITY OF DALY CITY, CALIFORNIA — N.S.M.C.S.D.

DRAWN BY : A. TAN

(CAST IN PLACE)
SANITARY SEWER MANHOLE

DATE: 07/07 — APPROVED BY: MP Sharma, CITY ENGINEER — STANDARD DRAWING NO. SS-3

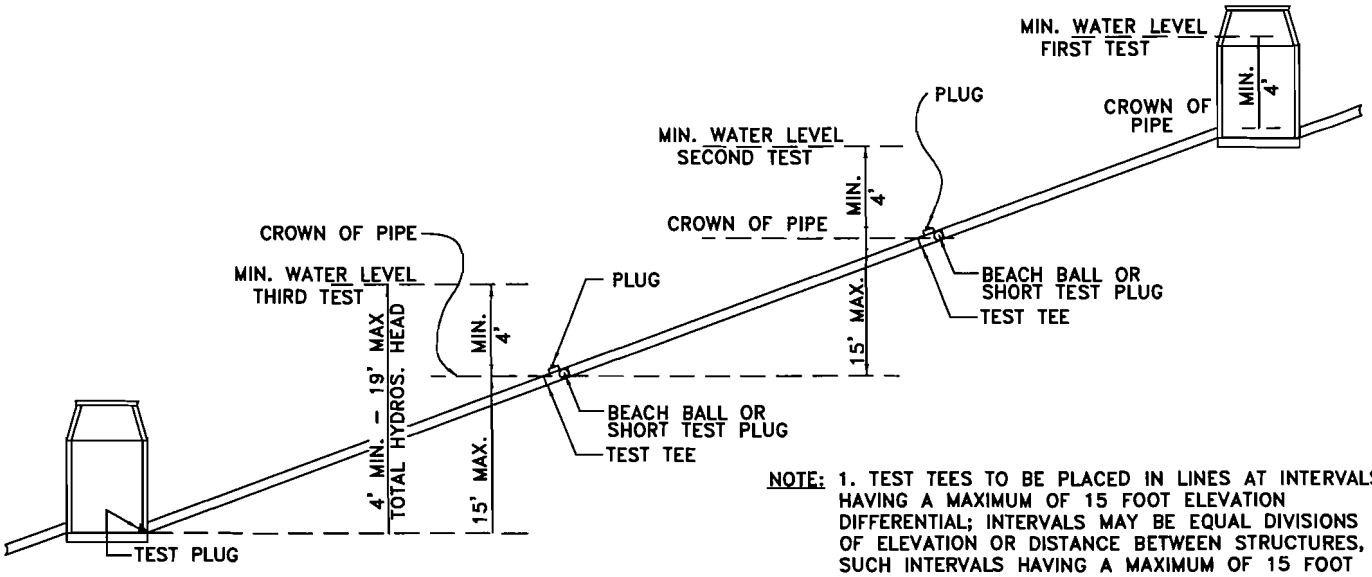

PROFILE

NOTE: 1. TEST TEES TO BE PLACED IN LINES AT INTERVALS HAVING A MAXIMUM OF 15 FOOT ELEVATION DIFFERENTIAL; INTERVALS MAY BE EQUAL DIVISIONS OF ELEVATION OR DISTANCE BETWEEN STRUCTURES, SUCH INTERVALS HAVING A MAXIMUM OF 15 FOOT ELEVATION DIFFERENTIAL.

2. SEWER LATERAL REPAIRS USING 3 OR MORE COUPLINGS REQUIRE TESTING.

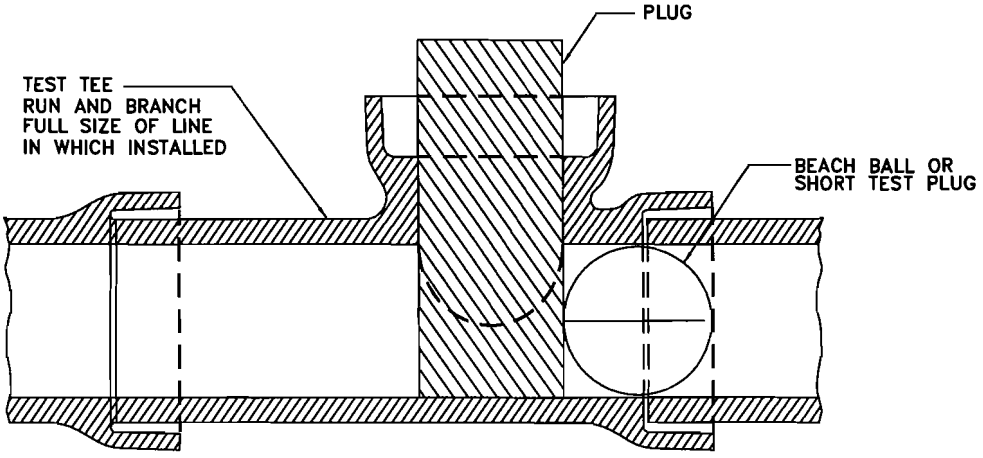

SECTION – TEST TEE

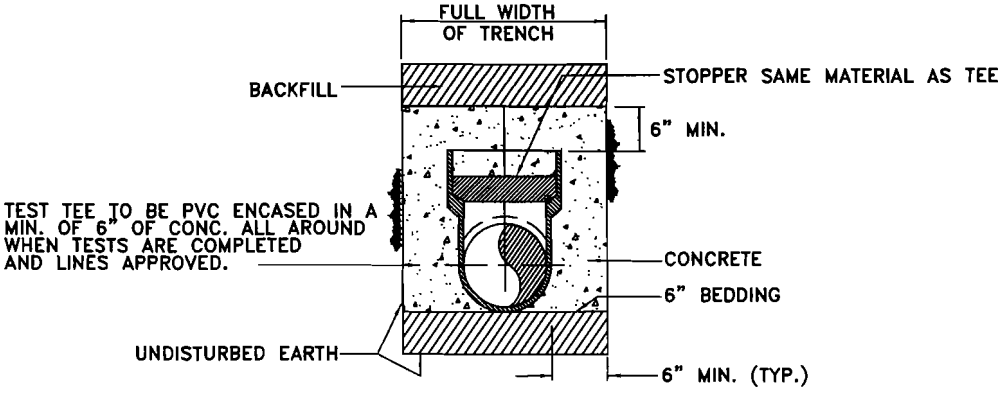

TEST TEE ENCASEMENT

CITY OF DALY CITY, CALIFORNIA N.S.M.C.S.D.

SANITARY SEWER TESTING TEE

DRAWN BY : A.TAN

DATE: 07/07

APPROVED BY: MP Sharma CITY ENGINEER

STANDARD DRAWING NO. SS-5

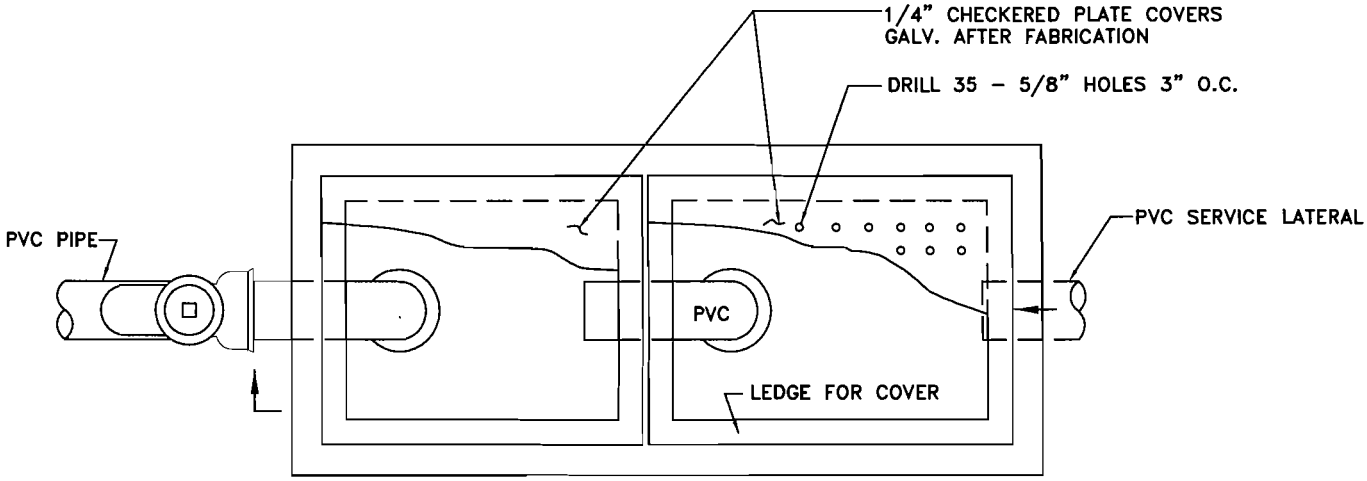

PLAN

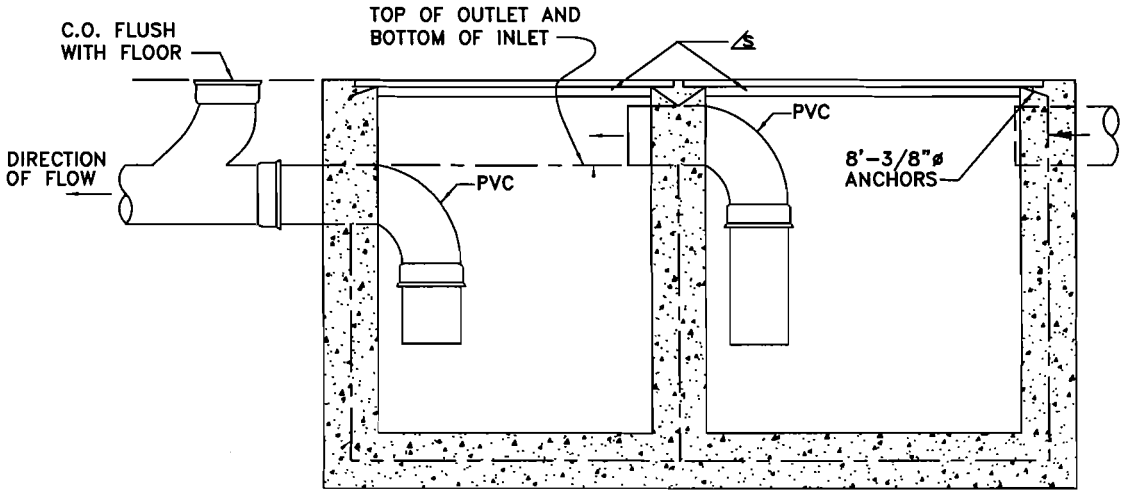

SECTION

NOTE:

1. PLAN AND SECTION ARE FOR REFERENCE ONLY
2. UNIT MUST BE SIZED ADEQUALTELY FOR THE AMOUNT OF FLOW. PROVIDE CALCULATIONS THROUGH SUBMITTAL. SEE STD DWG SS-6A FOR CALCULATIONS.

CITY OF DALY CITY, CALIFORNIA N.S.M.C.S.D.

DRAWN BY : I.SINGH

GREASE & SAND INTERCEPTOR

DATE: 07/07

APPROVED BY: MP Sharma , CITY ENGINEER

STANDARD DRAWING NO. SS-6

GREASE INTERCEPTOR SIZING WORKSHEET

The Uniform Plumbing Code Appendix H Formula

Location		Calculated by		Date	

Follow these six steps to determine grease interceptor size

	No. of Meals Per Peak Hour		Waste Flow Rate		Retention Time		Storage Factor		Calculated Interceptor Size	Grease Interceptor (min. 750 gal)
Enter Your Calculations Here >>	Step 1	x	Step 2	x	Step 3	x	Step 4	=	Step 5	Step 6

STEPS	CALCULATIONS	NOTES

Number of Meals Per Peak Hour (Recommended Formula):

Seating Capacity		Meal Factor		Meals per Peak Hour
Step 1	x	Step 2	=	Step 3

Establishment Type	Meal Factor
Fast Food (45 min.)	1.33
Restaurant (60 min.)	1.00
Leisure Dining (90 min.)	0.67
Dinner Club (120 min.)	0.50

Waste Flow Rate:

Condition	Flow Rate
With a Dishwashing Machine	6 Gallons
Without a Dishwashing Machine	5 Gallons
Single Service Kitchen	2 Gallons
Food Waste Disposer	1 Gallons

Retention Time:

Commercial Kitchen Waste Dishwasher	2.5 Hours
Single Service Kitchen	
Single Serving	1.5 Hours

Storage Factor:

Kitchen Type	Storage Factor
Fully-Equipped Commercial	
Hours of Operation	
8 Hours	1.00
12 Hours	1.50
16 Hours	2.00
24 Hours	3.00
Single Service Kitchen	1.50

Calculate Liquid Capacity:

Multiply the values obtained from Steps 1, 2, 3 and 4. The result is the approximate Grease Interceptor size for this application.

Select Grease Interceptor:

Using the approximate required liquid capacity from step 5, select an appropriate size as recommeded by the manufacturer and attach Cut Sheet as part of Plan Submittal / Review

CITY OF DALY CITY, CALIFORNIA — N.S.M.C.S.D.

DRAWN BY : I.SINGH

GREASE INTERCEPTOR

DATE: 07/07

APPROVED BY: MP Sharma, CITY ENGINEER

STANDARD DRAWING NO. SS-6A

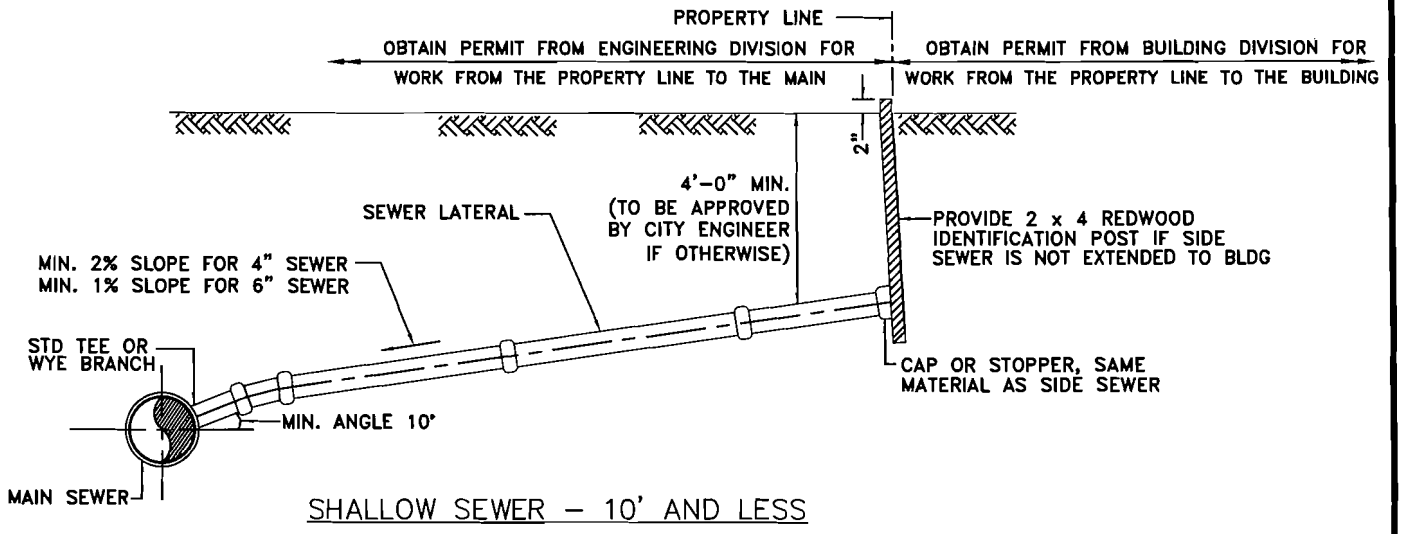

SHALLOW SEWER – 10' AND LESS

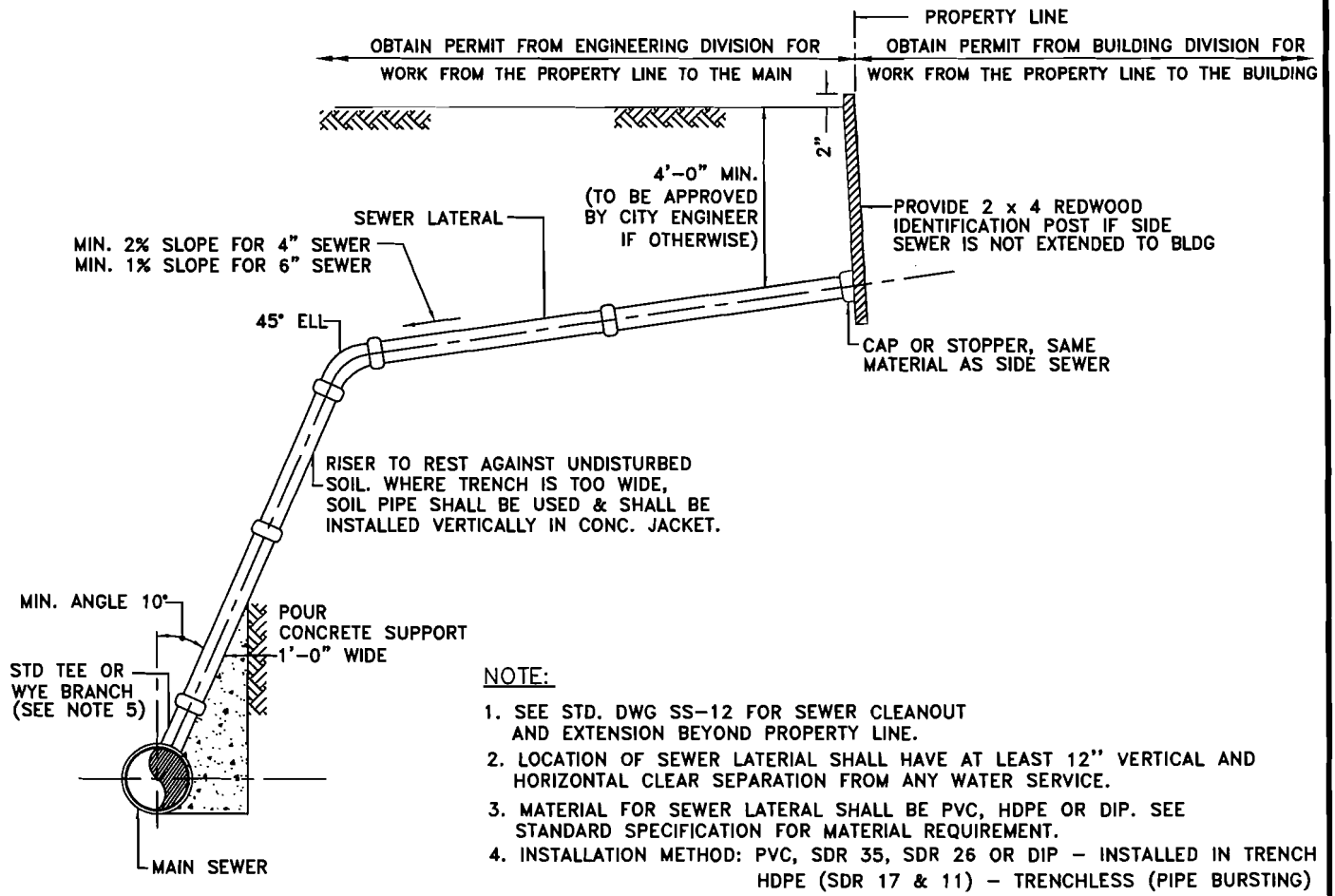

DEEP SEWER–GREATER THAN 10'

NOTE:

1. SEE STD. DWG SS–12 FOR SEWER CLEANOUT AND EXTENSION BEYOND PROPERTY LINE.
2. LOCATION OF SEWER LATERIAL SHALL HAVE AT LEAST 12" VERTICAL AND HORIZONTAL CLEAR SEPARATION FROM ANY WATER SERVICE.
3. MATERIAL FOR SEWER LATERAL SHALL BE PVC, HDPE OR DIP. SEE STANDARD SPECIFICATION FOR MATERIAL REQUIREMENT.
4. INSTALLATION METHOD: PVC, SDR 35, SDR 26 OR DIP – INSTALLED IN TRENCH
   HDPE (SDR 17 & 11) – TRENCHLESS (PIPE BURSTING)
5. SEE CITY STANDARD DWG. SS–7A FOR CONNECTION TO SEWER MAIN LARGER THAN 12 INCHES.
6. SPACE BETWEEN 2 ADJACENT TAPS SHALL BE AT LEAST 24 INCHES.
7. WHERE THE EXISTING SEWER SERVICE IS USED FOR NEW BUILDING, THE EXISTING SEWER SERVICE SHALL BE TELEVISED TO DETERMINE ITS INTEGRITY AND ADEQUACY TO SERVICE THE PROPERTY. THE VIDEO FILMING SHALL BE PERFORMED IN THE PRESENCE OF A DWWR REPRESENTATIVE AND A COPY OF THE FILM SHALL BE PROVIDED TO THE DWWR.

CITY OF DALY CITY, CALIFORNIA — N.S.M.C.S.D.

SEWER LATERAL DETAILS
(FOR PIPES SMALLER THAN 6-INCH)

DRAWN BY : A.TAN/AC

DATE: 07/07 APPROVED BY: MP Sharma, CITY ENGINEER STANDARD DRAWING NO. SS-7

SADDLE WYE

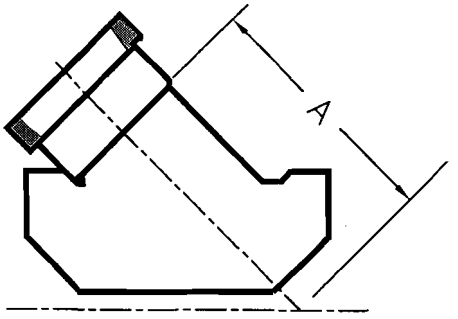

SIZE	PART No.	STYLE	A	WT. (approx.)
6x4	255-064	Molded	8.9	1.4
8x4	255-084	Molded	10.4	1.5
8x6	255-086	Molded	12.0	3.3
10x4	255-104	Molded	11.9	1.2
10x6	255-106	Molded	13.0	3.3
12x4	255-124	Molded	13.4	1.2
12x6	255-126	Molded	14.3	3.8

SADDLE TEE

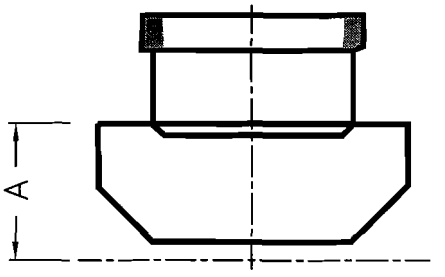

SIZE	PART No.	STYLE	A	WT. (approx.)
6x4	256-064	Molded	3.3	1.0
8x4	256-084	Molded	4.5	1.2
8x6	256-086	Molded	4.7	2.4
10x4	256-104	Molded	5.5	3.3
10x6	256-106	Molded	5.7	2.3
12x4	256-124	Molded	6.5	1.2
12x6	256-126	Molded	6.6	3.1

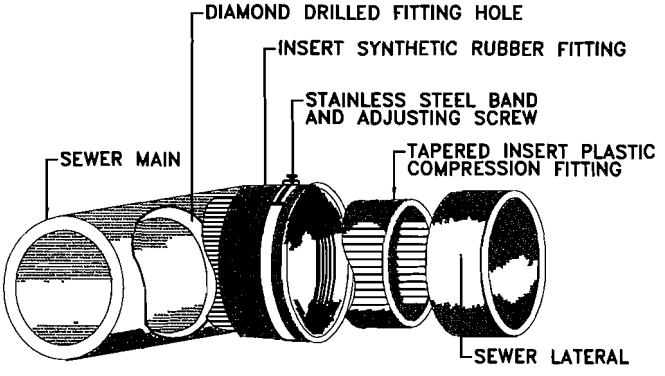

"TAP – TITE"
SIDE SEWER CONNECTION
MAINS LARGER THAN 12 INCHES

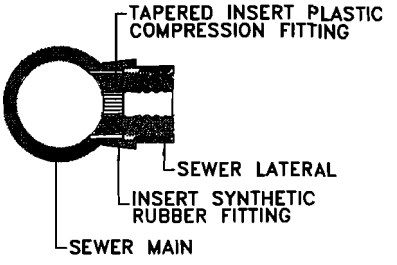

CITY OF DALY CITY, CALIFORNIA — N.S.M.C.S.D.

DRAWN BY : JPS

SEWER LATERAL CONNECTIONS
(FOR 6-INCH PIPE AND LARGER)

DATE: 07/07

APPROVED BY: MPSharma, CITY ENGINEER

STANDARD DRAWING NO. SS-7A

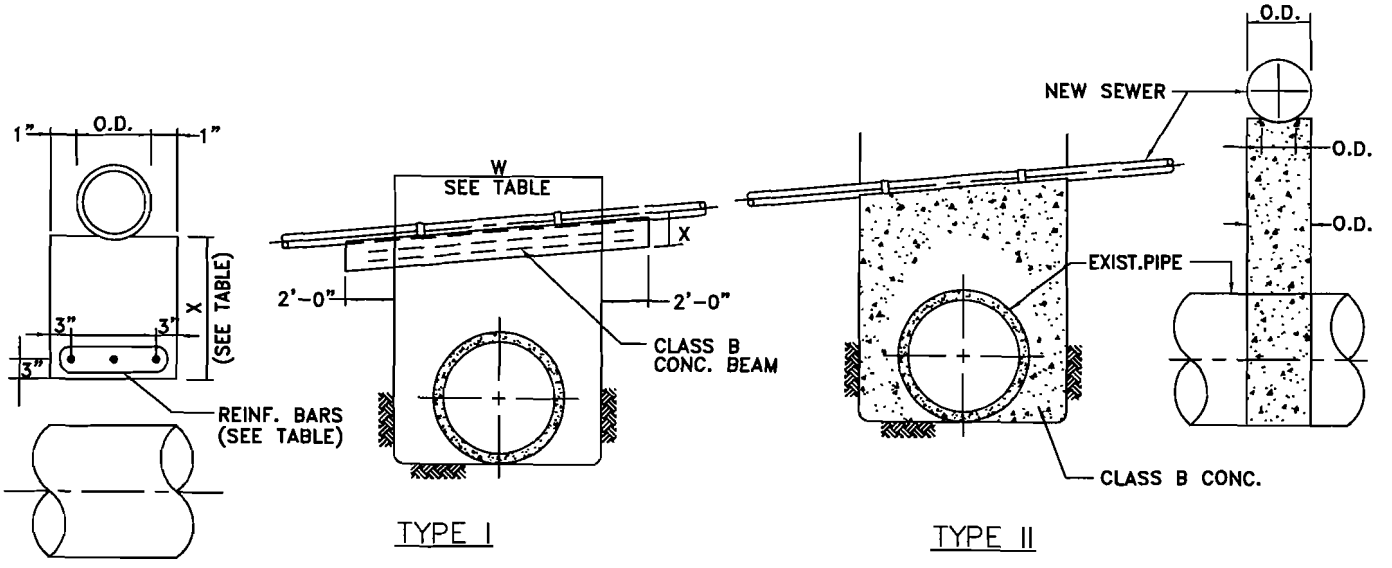

SUPPORT DETAILS OVER STORM DRAINS
(TYPE I OR II MAY BE USED AT CONTRACTOR'S OPTION)

DIMENSIONS OF
REINF. CONC. BEAM

W	Depth of Cover			
	0' to 8'-0"		8'-1" to 16'-0"	
	X	Bar No.	X	Bar No.
4'	8"	4	8"	4
5'	8"	4	9"	5
6'	8½"	5	10½"	5
7'	9"	5	11½"	6
8'	10"	5	12½"	6
9'	11"	6	13½"	6
10'	12"	6	15"	7

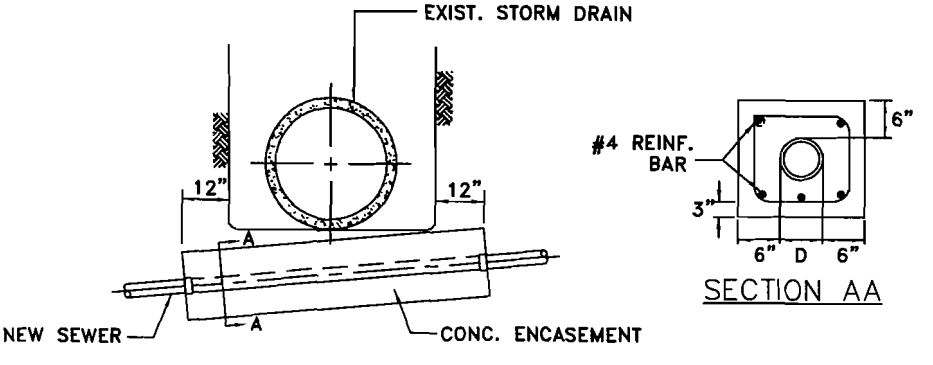

ENCASEMENT BELOW STORM DRAIN

CITY OF DALY CITY, CALIFORNIA N.S.M.C.S.D.

DRAWN BY : A.TAN NEW SEWER PIPE SUPPORT ACROSS TRENCHES

DATE: 07/07 APPROVED BY: MP Sharma, CITY ENGINEER STANDARD DRAWING NO. SS-8

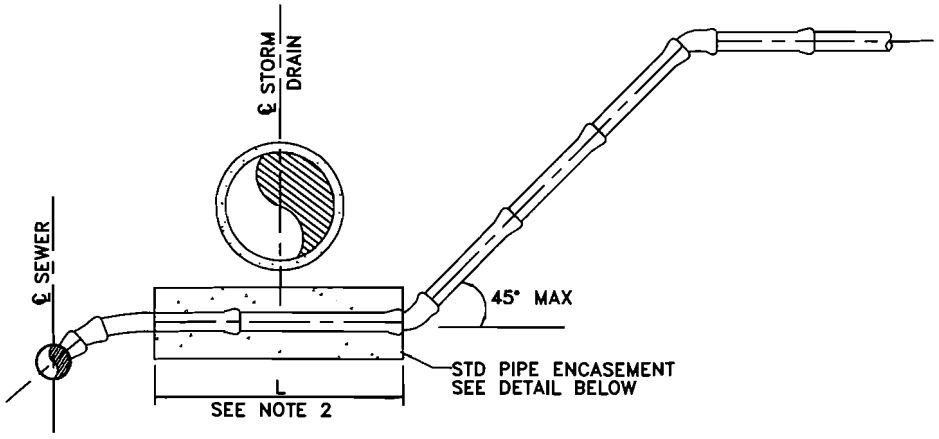

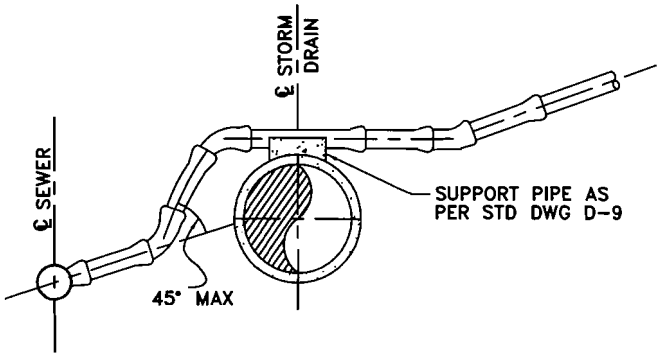

NOTES:

1. MINIMUM SLOPE FOR 6-INCH SIDE SEWER SHALL BE 1/4" PER FOOT.
2. L = WIDTH OF STORM DRAIN TRENCH PLUS EXTENSION AT BOTH SIDES TO FIRST PIPE JOINT AT OR BEYOND TRENCH

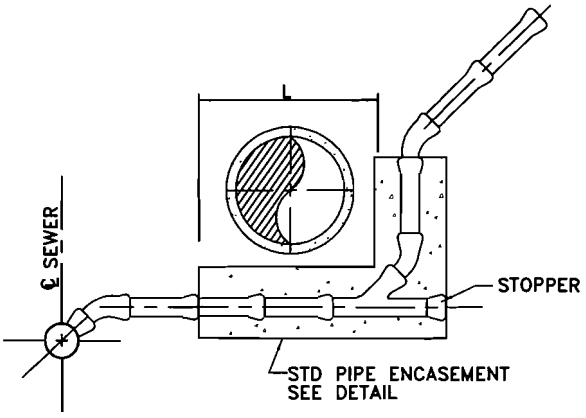

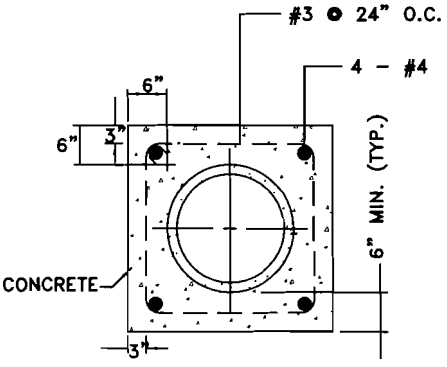

STANDARD
PIPE ENCASEMENT DETAIL

CITY OF DALY CITY, CALIFORNIA N.S.M.C.S.D.

SIDE SEWERS AT UTILITY INTERSECTIONS

DRAWN BY : A.TAN

DATE: 6/03

APPROVED BY: MPSharma, CITY ENGINEER STANDARD DRAWING NO. SS-9

NOTE:

TO BE PLACED AT 20' INTERVALS WHERE GROUND SLOPE IS 1 TO 1 OR GREATER OR AS REQUIRED BY DISTRICT ENGINEER.

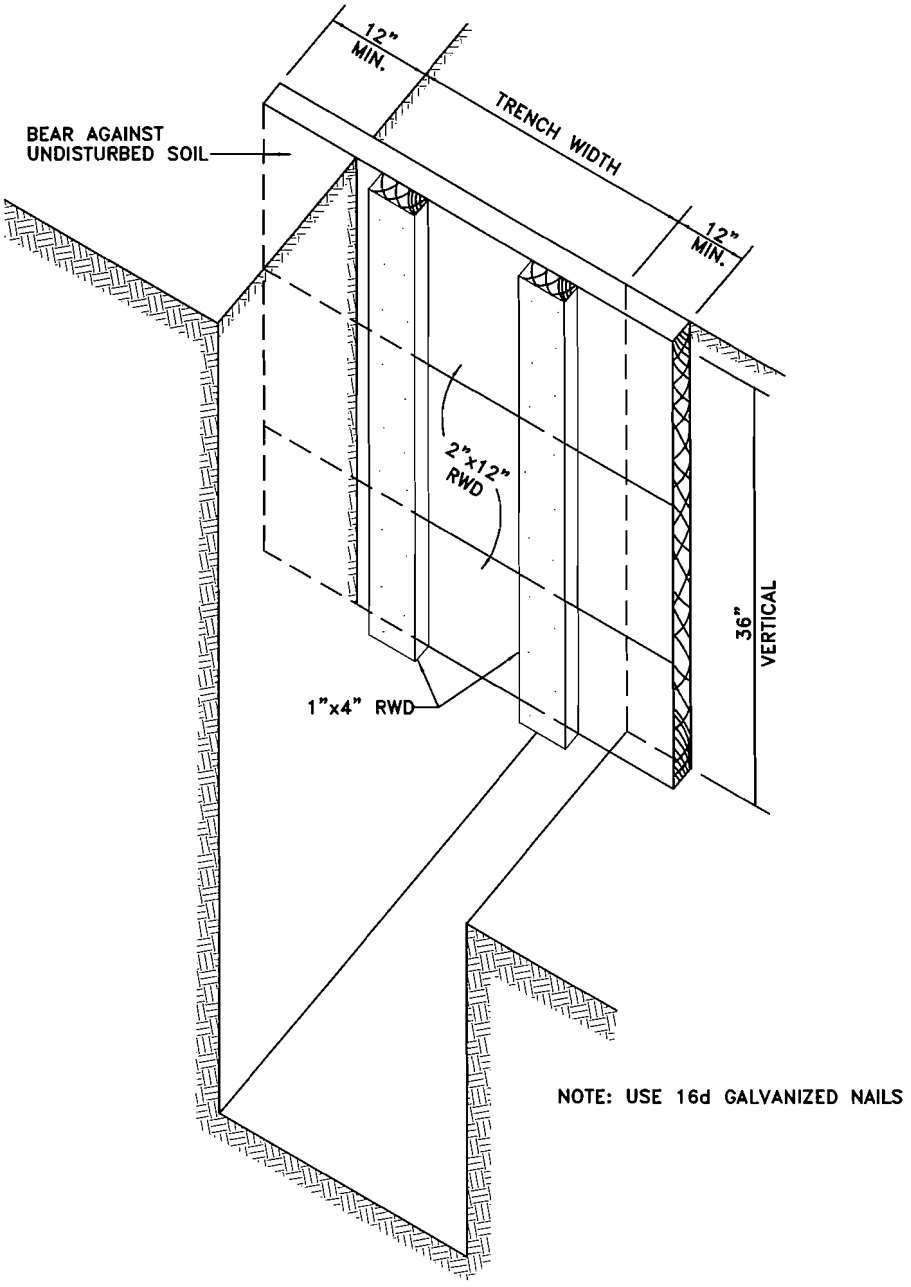

PERSPECTIVE

CITY OF DALY CITY, CALIFORNIA N.S.M.C.S.D.

DRAWN BY : A. TAN

TRENCH DAM

DATE: 6/03 APPROVED BY: MP Sharma , CITY ENGINEER STANDARD DRAWING NO. SS-10

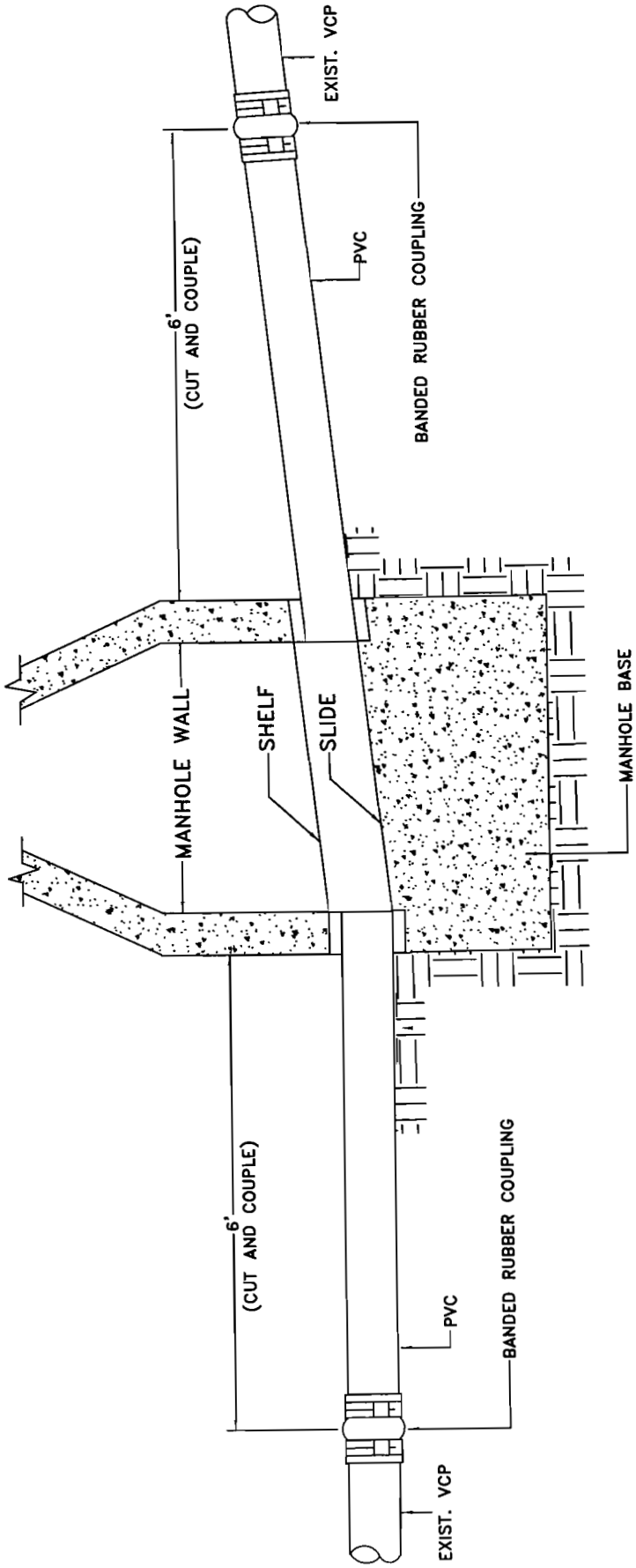

NEW MANHOLE INSTALLATION
ON EXISTING VCP MAIN

CITY OF DALY CITY, CALIFORNIA N.S.M.C.S.D.

DRAWN BY : A. TAN

DATE: 07/07

FLEXIBLE CONNECTION AT MANHOLE TIE-IN (WHEN REQUIRED)

APPROVED BY: MP Sharma , CITY ENGINEER

STANDARD DRAWING NO. SS-11

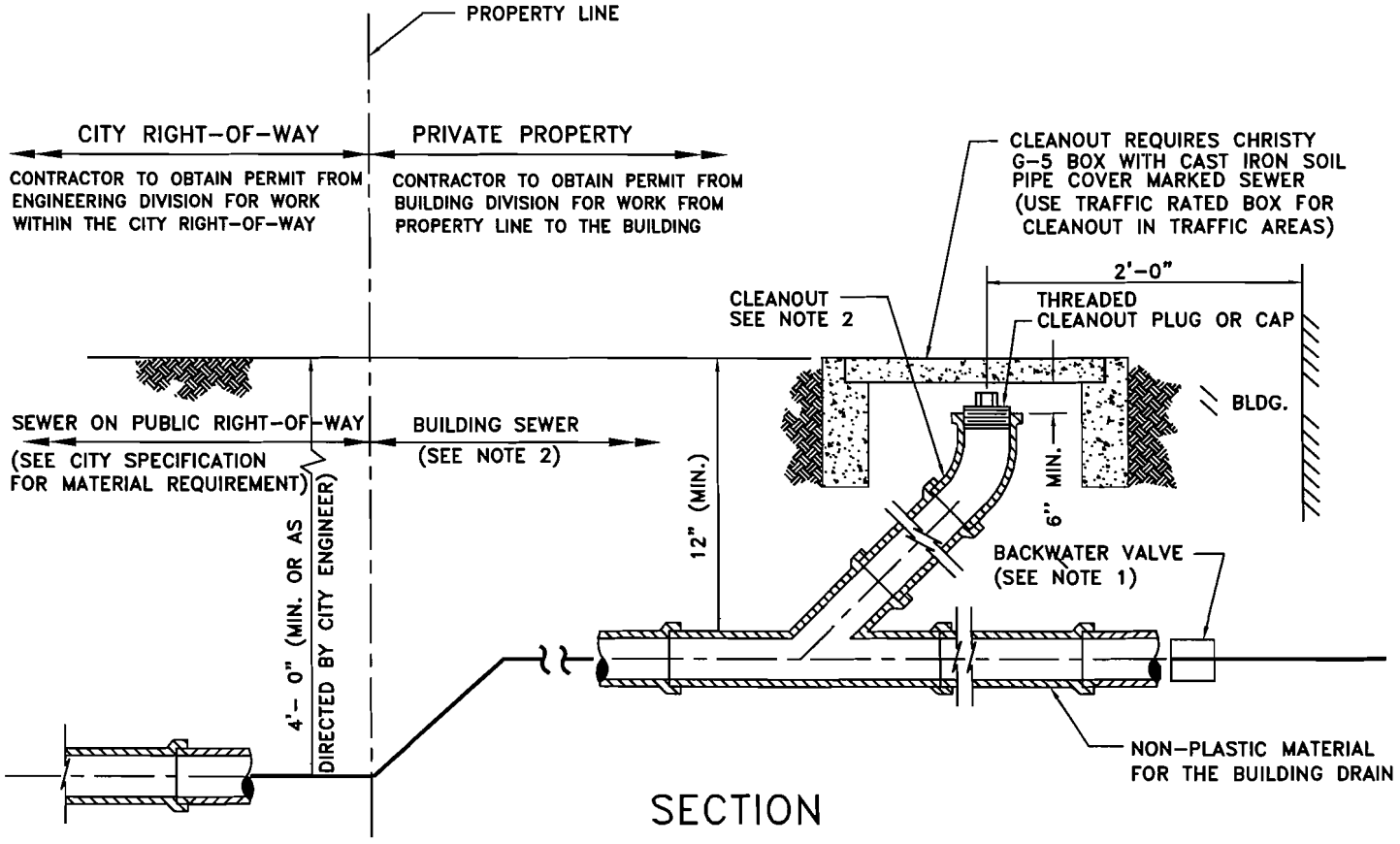

SECTION

ONE – WAY CLEAN OUT DETAIL

NOTES:

1. BACKWATER VALVE IS REQUIRED WHEN SLOPE OF SEWER LATERAL FROM BUILDING TO SEWER MAIN IS LESS THAN 2% OR WHEN THE LOWEST FIXTURE IN THE BUILDING IS BELOW THE RIM OF THE NEXT DOWNSTREAM MANHOLE.
2. CLEANOUT AND BUILDING SEWER PIPE SHALL BE PE SCHEDULE 11 OR 17 OR PVC SDR 26 OR 35.
3. SEWER RUNS OF 50 FEET OR LONGER MAY, AT THE OPTION OF THE ENGINEER/DWWR, REQUIRE AN ADDITIONAL CLEANOUT.

CITY OF DALY CITY, CALIFORNIA — N.S.M.C.S.D.

CLEAN OUT & BACKWATER VALVE

DRAWN BY : A. TAN

DATE: 07/07

APPROVED BY: MPSharma, CITY ENGINEER

STANDARD DRAWING NO. SS-12

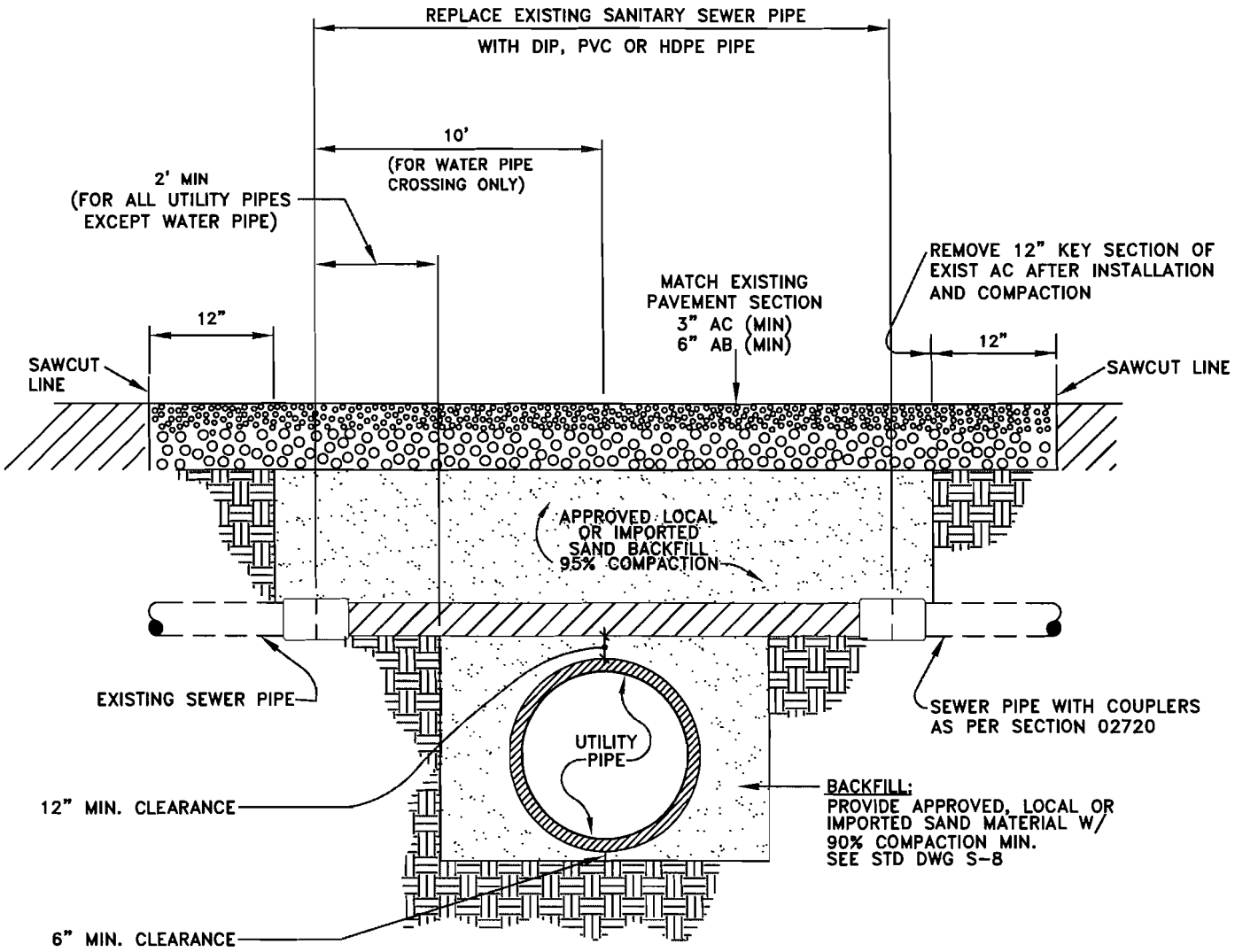

NOTES:

1. WHERE DUCTILE IRON PIPE IS PROVIDED, IT SHALL BE CEMENT MORTAR LINED (CML). PIPE WITH MECHANICAL OR PUSH-ON JOINTS AS SPECIFIED FOR WATER MAIN UNDER CITY STD SPECIFICATION SECTION 02710.

2. BANDED RUBBER COUPLINGS OR EQUIVALENT FOR CLAY PIPE LATERALS SHALL BE USED IN COMBINATION WITH ELASTOMERIC TRANSITIONAL BUSHINGS

CITY OF DALY CITY, CALIFORNIA N.S.M.C.S.D.

DRAWN BY : AC

NEW UTILITY PIPE CROSSING EXISTING SEWER PIPE

DATE: 07/07

APPROVED BY: MP Sharma , CITY ENGINEER STANDARD DRAWING NO. SS-13

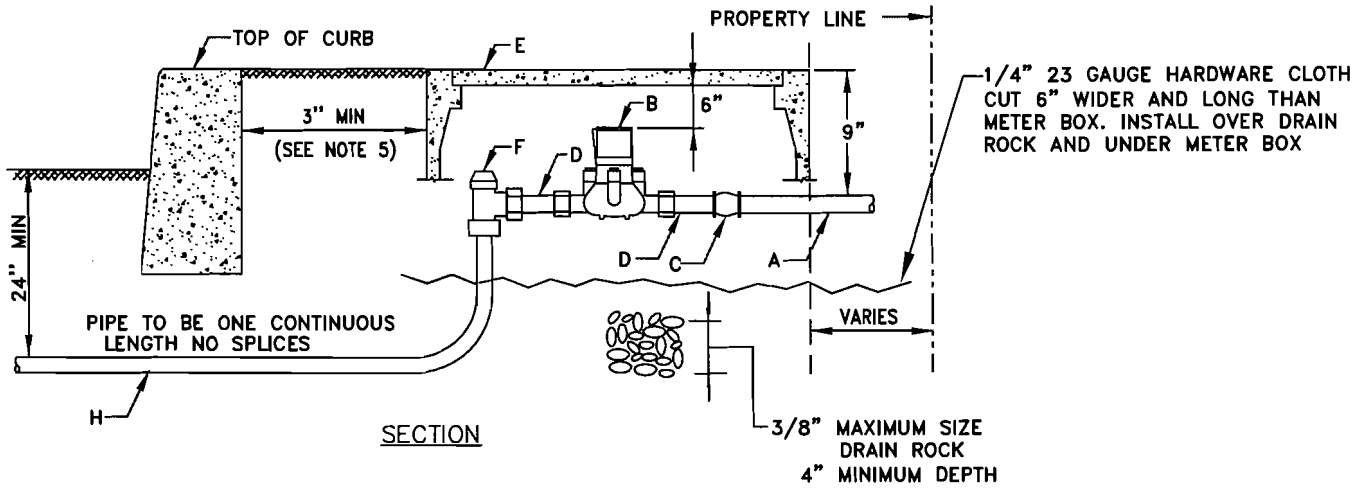

SECTION

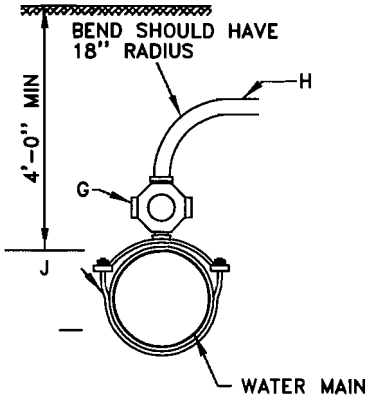

TOP SERVICE CONNECTION

USE THIS INSTALLATION WHEN WATER MAIN IS MORE THAN 4'-0" DEEP.

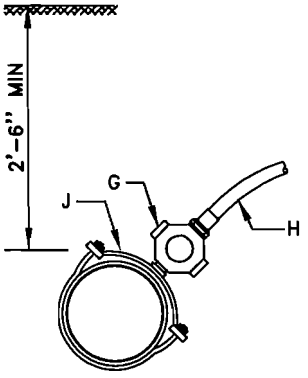

45° SERVICE CONNECTION

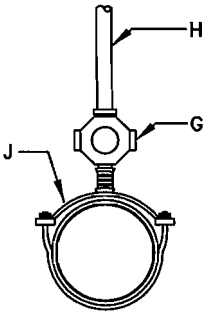

DIRECT CONNECTION

USE THIS INSTALLATION FOR SERVICES LOCATED DIRECTLY ABOVE THE MAIN

NOTES:

1. CONTRACTOR SHALL PURCHASE THE WATER METER AT THE CITY'S UTILITY BILLING OFFICE. THE INSTALLATION OF WATER METER SHALL BE COORDINATED WITH THE CITY ENGINEERING INSPECTOR.
2. LOCATION OF TAP SHALL BE:
   - 24" OR MORE FROM ADJACENT TAP
   - 18" OR MORE FROM ADJACENT BELL OR COUPLING
   - 12" VERTICAL SEPARATION AND 5 FEET HORIZONTAL SEPARATION FROM SANITARY SEWER LATERAL AND OTHER UTILITIES.
3. CENTERLINE OF METERS SHALL BE 2' MIN. AWAY FROM BOTH EDGES OF DRIVEWAYS.
4. WATER METER BOX SHALL BE:
   - CHRISTY FL-30 FOR 1" METER
   - CHRISTY FL9 FOR SMALLER METERS.
   - TRAFFIC RATED BOX FOR METER BOX EXPOSED TO TRAFFIC.
   - LOCATED AT BACK OF SIDEWALK OR IN LANDSCAPING AREA WITHIN CITY RIGHT OF WAY.
5. SEE SECTION 02710 FOR EQUIPMENT OPTIONS.
6. WATER METERS AND WATER METER BOXES SHALL BE PLACED IN CITY RIGHT OF WAY, AT PROPERTY LINE AND SHALL BE LOCATED IN LANDSCAPED AREAS ONLY.
7. A CERTIFIED DISTRIBUTION SYSTEM OPERATOR MUST BE PRESENT FOR THE HYDROSTATIC TESTING, CHLORINATION, FLUSHING, BACTERIA TESTING AND CONNECTIONS TO THE EXISTING SYSTEM PER CALIFORNIA DEPARTMENT OF HEALTH SERVICES, OPERATOR CERTIFICATION REGULATIONS, SECTIONS 63770. THE ENGINEER MUST RECEIVE THE REQUEST FOR THE CERTIFIED OPERATOR TO BE PRESENT FOR THESE OPERATIONS IN WRITING NO LESS THAN SIX (6) WORKING DAYS PRIOR TO THE ANTICIPATED DATE OF WORK.

MATERIAL REQUIREMENTS	
A	CUSTOMER'S PIPE PER UBC OR UPC REQUIREMENTS
B	WATER METER SUPPLIED BY CITY (SEE NOTE 1)
C	COUPLING PER FIELD CONDITIONS
D	METER COUPLING MUELLER H-10896(SPUD)
E	METER BOX AND LID SET BY CONTRACTOR (SEE NOTE 3)
F	ANGLE STOP MUELLER #B-24258*
G	COCK. CORPORATION MUELLER #B-25028 I.P.T. X COPPPER
H	TUBING COPPER TYPE K SOFT
J	SADDLE SERVICE MUELLER BR2B WITH AWWP FIPT
*	FOR 3/4" METERS USE MUELLER STRAIGHT COUPLING #H-10889

CITY OF DALY CITY, CALIFORNIA — DEPARTMENT OF PUBLIC WORKS

DRAWN BY : A. TAN

DATE: 07/07

1" WATER SERVICE LATERAL CONNECTION FOR 3/4" OR 1" METER

APPROVED BY: MP Sharma, CITY ENGINEER

STANDARD DRAWING NO. W-1

COMBINED RESIDENTIAL FIRE & DOMESTIC WATER SERVICE

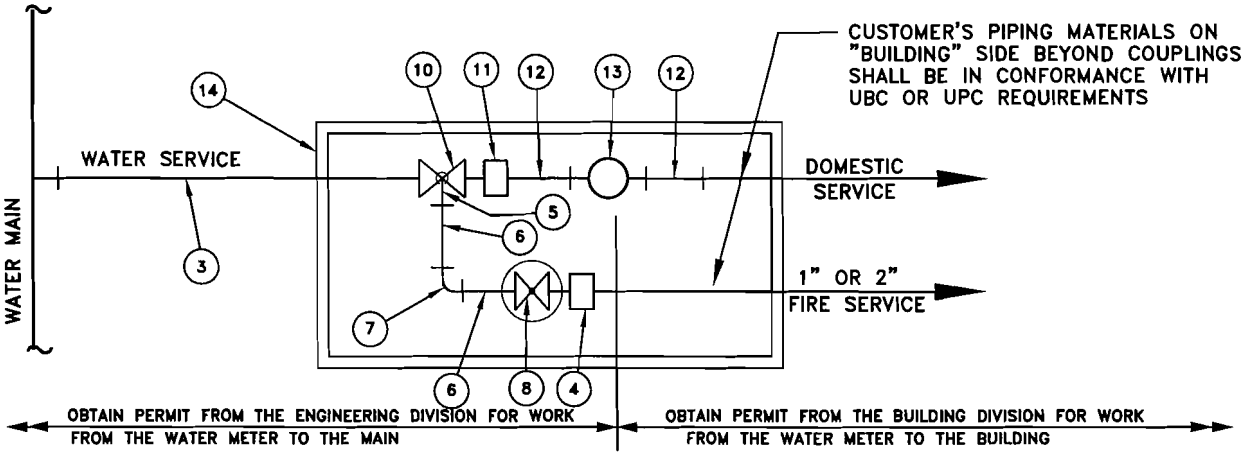

PLAN

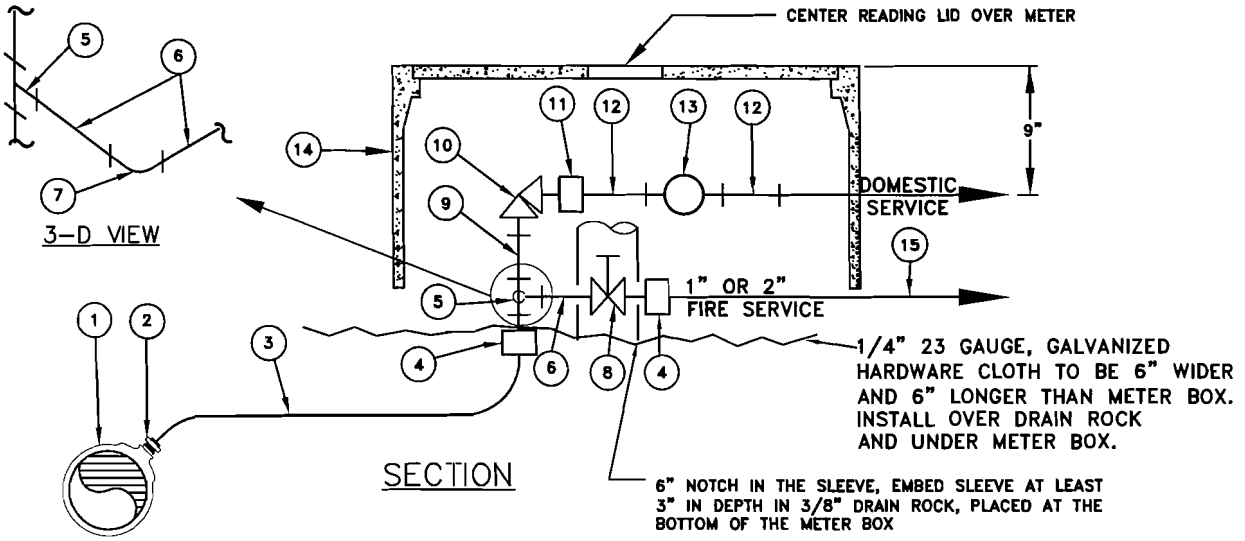

SECTION

MATERIAL LIST			
1	SADDLE, DOUBLE STRAP BRONZE, MUELLER BR2B WITH WITH AWWA FIPT	10	BALL ANGLE METER VALVE, FIP x METER NUT MUELLER B24265
2	CORPORATION STOP, MUELLER #B-25028(2") OR (1") I.P.T. x COPPER	11	METER BUSHING WITH RUBBER WASHER, 1"x 3/4" MUELLER H10889
3	TUBING, COPPER TYPE "K", SOFT- 1"MIN. (SEE NOTE 4)	12	STRAIGHT METER COUPLING, 3/4" MUELLER H10896
4	STRAIGHT COUPLING CTS x MIP, 1" OR 2", MUELLER #H15428	13	WATER METER 3/4" (TOUCH READ TYPE), SUPPLIED BY CITY (SEE NOTE 1)
5	BRONZE TEE, 1" OR 2"	14	WATER METER BOX AND COVER, CHRISTY CONCRETE PRODUCTS, INC. FL-30 BOX AND LID (BOX AND LID SUPPLIED BY CITY, SET BY CONTRACTOR) NOTE: USE TRAFFIC RATED BOX FOR METER BOX EXPOSED TO TRAFFIC
6	BRASS SHOULDER NIPPLE, 1" OR 2"		
7	BRONZE 90° ELBOW, 1" OR 2"		
8	BALL CURB VALVE, FIP x FIP, 1" OR 2" MUELLER B20200-FIPxFIP OR FORD B11-777WW-FIPxFIP LOCK OPEN DEVICES		
9	BRASS CLOSE NIPPLE 1" OR BRASS BUSHING 2" x 1" WITH BRASS CLOSE NIPPLE 1"	5	TUBING, COPPER TYPE "K", SOFT- 1" MINIMUM. SEE NOTE 4.

NOTES:

1. CONTRACTOR SHALL PURCHASE THE WATER METER AT THE CITY'S UTILITY BILLING OFFICE. THE INSTALLATION OF THE WATER METER SHALL BE COORDINATED THROUGH THE CITY ENGINEERING INSPECTOR.
2. REFER TO DRAWING W-1 FOR TAPPING RESTRICTIONS, METER BOX LOCATION AND OTHER INSTALLATION CONDITIONS..
3. SEE SECTION 02710 FOR EQUIPMENT OPTIONS, AND OTHER RELEVENT INFORMATION.
4. SUBMIT TO ENGINEERING DIVISION, THE REQUIRED PIPE SIZING CALCULATION TO MEET DOMESTIC AND FIRE FLOW COMBINED DEMAND. NOTE THAT THE PIPE SIZES ALLOWED ARE 1", 2" OR GREATER.
5. SUBMIT TO FIRE DEPARTMENT, THE REQUIRED PIPE SIZING CALCULATION TO MEET FIRE FLOW DEMAND.
6. TWO INCH (2") WATER SERVICE CONNECTIONS SHALL NOT BE MADE TO WATER MAINS LESS THAN FOUR INCHES (4") IN DIAMETER.

CITY OF DALY CITY, CALIFORNIA — DEPARTMENT OF PUBLIC WORKS

WATER SERVICE LATERAL 1" & 2" COMBINATION SERVICE CONNECTIONS

DRAWN BY : A. TAN

DATE: 07/07

APPROVED BY: M P Sharma, CITY ENGINEER

STANDARD DRAWING NO. W-2

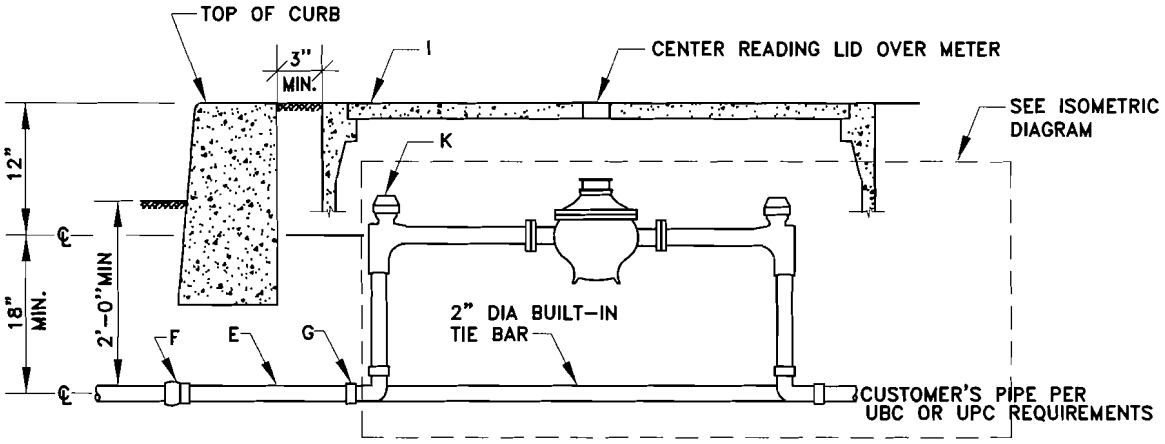

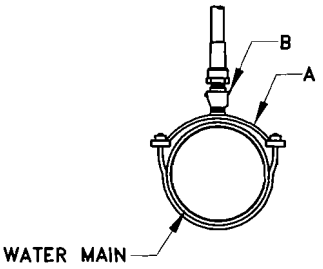

USE THIS INSTALLATION FOR SERVICES LOCATED DIRECTLY ABOVE THE MAIN

DIRECT CONNECTION

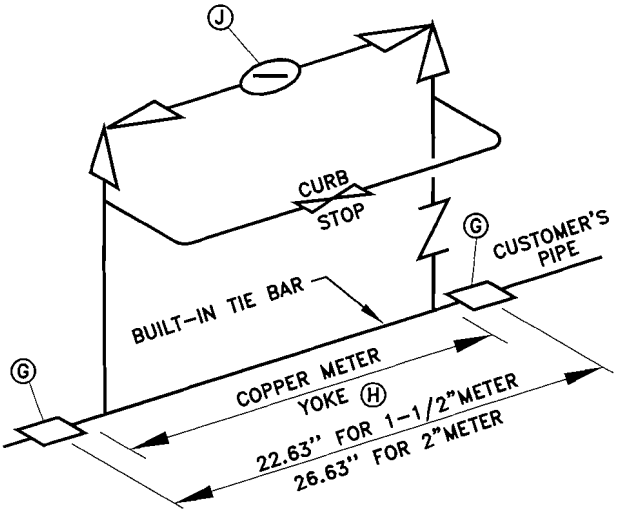

ISOMETRIC DIAGRAM

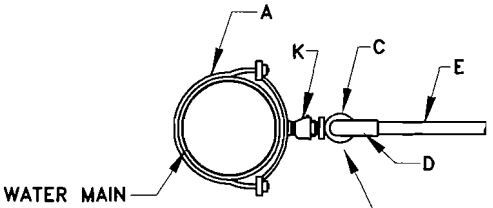

SWING JOINT
SIDE SERVICE CONNECTION

SEE DETAIL

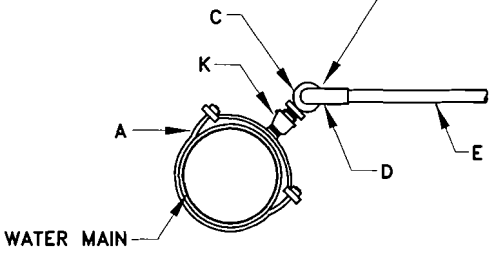

SWING JOINT
45° SERVICE CONNECTION

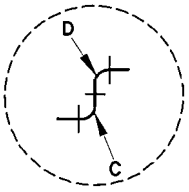

SWING JOINT
DETAIL

NOTES:

1. ANY OF THE THREE TYPES OF CONNECTION SHOWN MAY BE USED, DEPENDING UPON FIELD REQUIREMENTS.
2. FOR BOTH 1-1/2" AND 2" METERS, ALL PIPING SHALL BE 2" IN DIAMETER.
3. SEE SECTION 02710 FOR EQUIPMENT OPTIONS.

MATERIAL REQUIREMENTS

A	SADDLE SERVICE MUELLER BR2B WITH AWWA FIPT
B	CORPORATION STOP MUELLER B-25028
C	ELL 2". BRONZE MIPT X FIPT
D	ELL 2"C TO I.P.T. MALE (ALT-MUELLER H15531)
E	TUBING 2" COPPER, SOFT K OR RIGID COPPER.
F	COUPLING 2" C TO C MUELLER H-15403
G	ADAPTOR, 2", MIPT x COPPER TUBING OR MUELLER H-15429
H	COPPER METER YOKE BY MUELLER: 1-1/2" METER = #B-2423-2-99000 2" METER = #B-2423-2-99000
I	METER BOX, CHRISTY FL36. SUPPLIED BY CITY AND SET BY CONTRACTOR
J	METER, 1-1/2" OR 2", SUPPLIED BY CITY AND SET BY CONTRACTOR.
K	CORPORATION STOP MUELLER B-20046

CITY OF DALY CITY, CALIFORNIA — DEPARTMENT OF PUBLIC WORKS

DRAWN BY : A. TAN

DATE: 6/03

2" WATER SERVICE LATERAL FOR 1-1/2" OR 2" METER

APPROVED BY: MP Sharma, CITY ENGINEER

STANDARD DRAWING NO. W-3

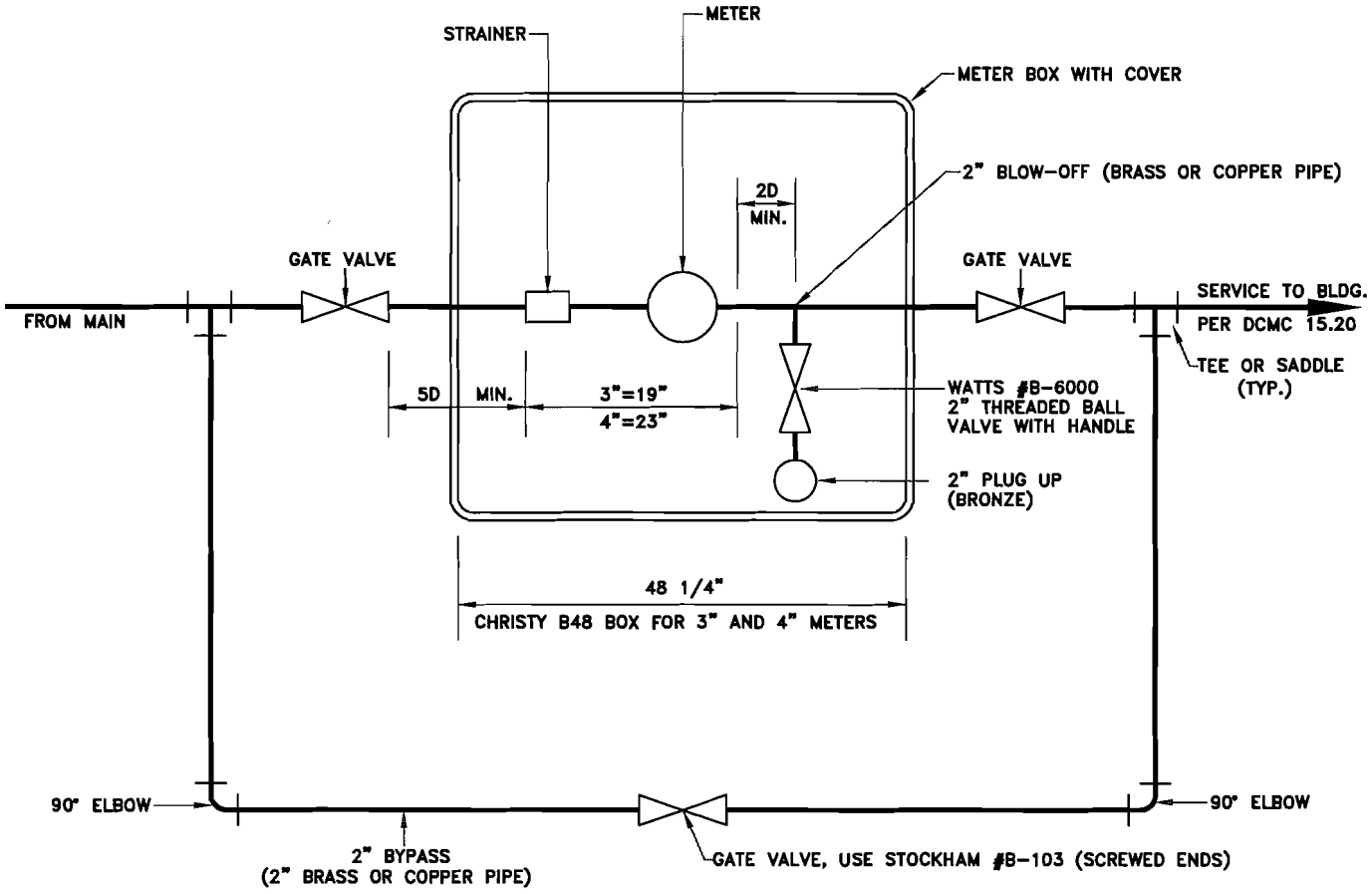

SCHEMATIC PLAN

NOT TO SCALE

NOTE:

1. EACH VALVE OUTSIDE OF METER BOX SHALL HAVE A VALVE BOX.
2. WATER METER REGISTER SHALL BE TOUCH-READ TYPE. REGISTER COVER SHALL BE NO MORE THAN 11" BELOW TOP OF COVER. READING LID DOES NOT HAVE TO BE CENTERED OVER REGISTER.
3. INSTALLATION DRAWINGS MUST BE APPROVED BY DEPARTMENT OF WATER/WASTEWATER RESOURCES.
4. CITY FURNISHES METER WITH STRAINER. CONTRACTOR SETS METER/STRAINER AND METER BOX.
5. SEE SECTION 02710 FOR EQUIPMENT OPTIONS.

CITY OF DALY CITY, CALIFORNIA — DEPARTMENT OF PUBLIC WORKS

DRAWN BY : I. SINGH — WATER SERVICE LATERAL – 3" & LARGER

DATE: 05/08 APPROVED BY: _____ ACTING CITY ENGINEER — STANDARD DRAWING NO. W-4

N:\DC-Cad-Final\SID Plans-Specs\SID Plans\W-4.DWG, 5/29/2008 10:55:05 AM

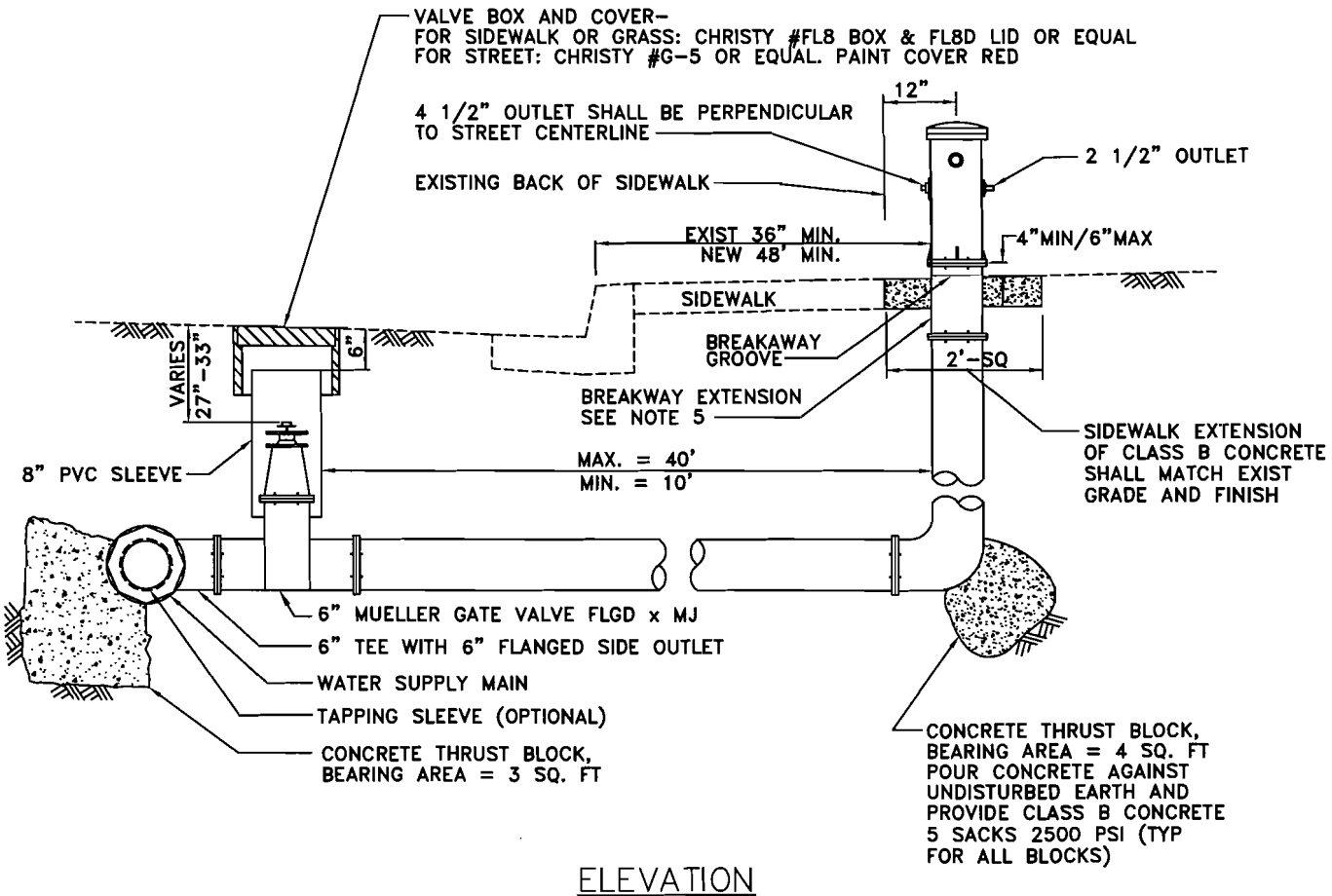

ELEVATION

NOTE:

1. THE FIRE HYDRANT SHALL BE PAINTED CHROME YELLOW ENAMEL CONFORMING TO AWWA STANDARD C503, DUNN-EDWARDS-SYN-LUSTRO #10-14 HIGH VISIBILITY YELLOW-INDUSTRIAL MAINTENANCE ENAMEL. PRIOR TO CONTRACTOR'S REQUEST FOR CITY PUNCH LIST , DAMAGED PAINT AREAS SHALL BE RETOUCHED AND ONE ADDL, OVERALL FINISH COAT SHALL BE APPLIED.
2. BLUE REFLECTORIZED MARKER SHALL BE INSTALLED 0.75' OFF CENTER LINE OF STREET ON THE SIDE TOWARD THE FIRE HYDRANT.
3. HYDRANT SHALL HAVE A MINIMUM 3' CLEARANCE FROM ANY ADJACENT FIXED OBJECT.
4. THE WATER SUPPLY MAIN FOR FIRE HYDRANT SHALL HAVE A MINIMUM OF 6" DIAMETER.
5. BREAKAWAY EXTENSIONS SHOULD NOT BE SHORTER THAN 6" NOR LONGER THAN 12".
6. TO ALLOW CONTINUAL FIRE DEPARTMENT ACCESS WHEREVER FEASIBLE, VALVE LOCATION SHALL BE OUTSIDE OF PARKING LANE.
7. ALL MECHANICAL JOINTS SHALL BE PROVIDED WITH APPROVED JOINT RESTRAINT DEVICES, "MEGALUGS" BY EBBA, OR EQUAL..
8. CITY TO PROVIDE "COLOR CODED" OUTLET CAPS PER NFPA STANDARD 291.

CITY OF DALY CITY, CALIFORNIA — DEPARTMENT OF PUBLIC WORKS

WATER MAIN CONNECTION - FIRE HYDRANTS
(RESIDENTIAL AREA)

DRAWN BY : A. TAN

DATE: 07/07

APPROVED BY: MP Iranna , CITY ENGINEER

STANDARD DRAWING NO. W-5

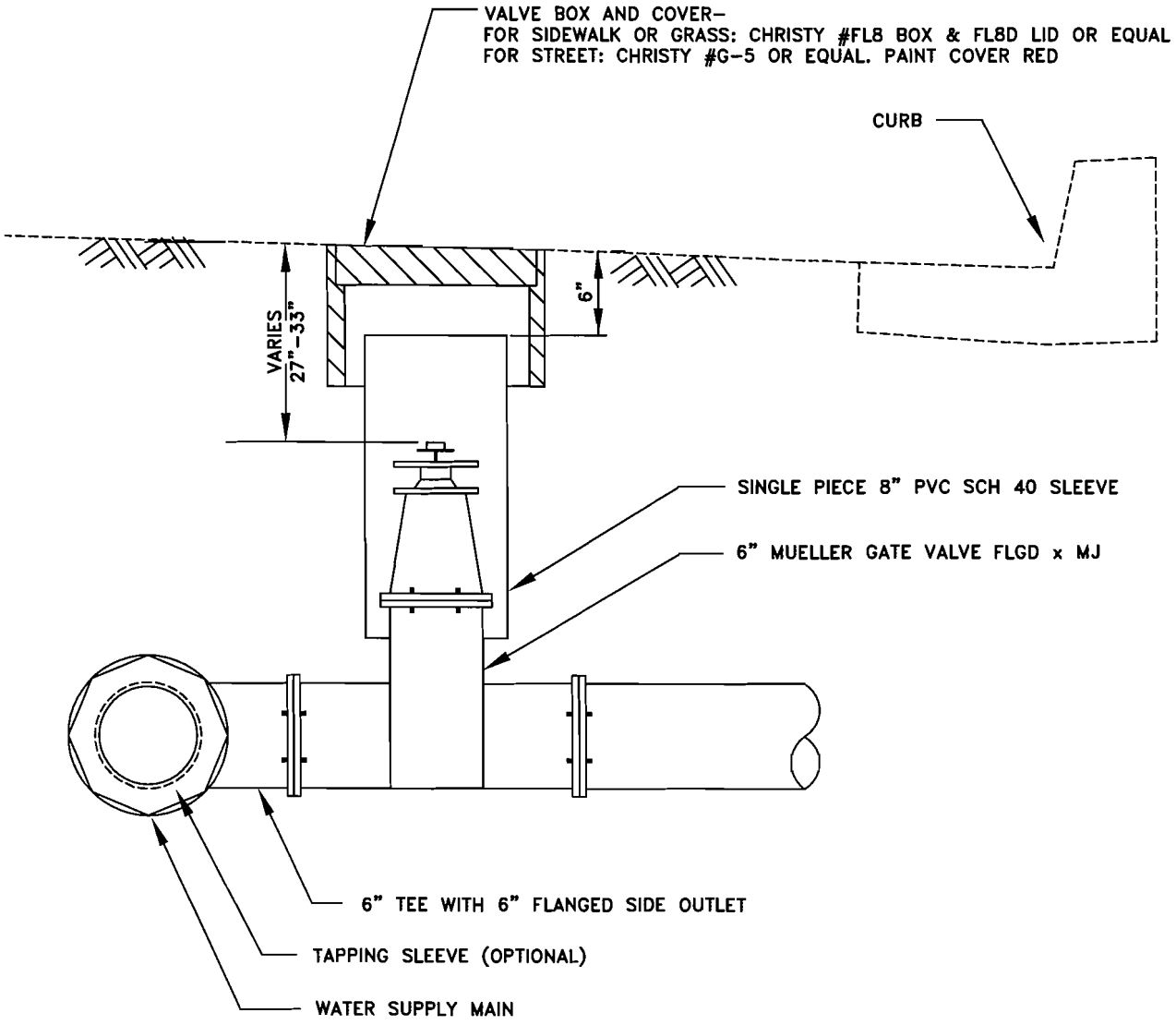

VALVE DETAIL

CITY OF DALY CITY, CALIFORNIA	DEPARTMENT OF PUBLIC WORKS
DRAWN BY : I. SINGH	WATER MAIN CONNECTION – FIRE HYDRANT VALVE DETAIL (RESIDENTIAL AREA)
DATE: 07/07	APPROVED BY: M P Sharma , CITY ENGINEER STANDARD DRAWING NO. W-5A

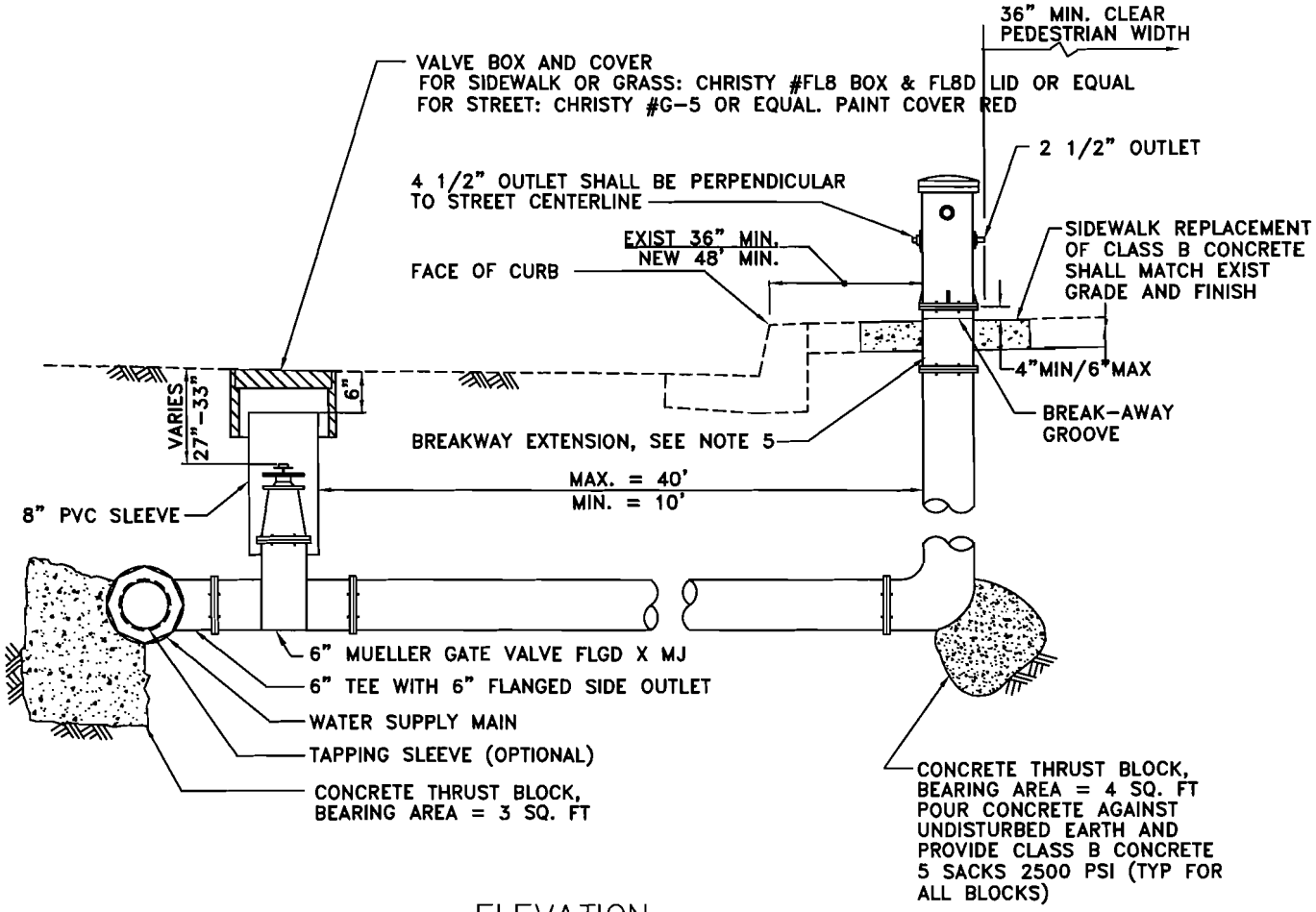

ELEVATION

NOTE:

1. THE FIRE HYDRANT SHALL BE PAINTED CHROME YELLOW ENAMEL CONFORMING TO AWWA STANDARD C503, DUNN-EDWARDS-SYN-LUSTRO #10-14 HIGH VISIBILITY YELLOW-INDUSTRIAL MAINTENANCE ENAMEL. PRIOR TO CONTRACTOR'S REQUEST FOR CITY PUNCH LIST , DAMAGED PAINT AREAS SHALL BE RETOUCHED AND ONE ADDL, OVERALL FINISH COAT SHALL BE APPLIED.
2. BLUE REFLECTORIZED MARKER SHALL BE INSTALLED 0.75' OFF CENTER LINE OF STREET ON THE SIDE TOWARD THE FIRE HYDRANT.
3. HYDRANT SHALL HAVE A MINIMUM 3' CLEARANCE FROM ANY ADJACENT FIXED OBJECT.
4. THE WATER SUPPLY MAIN FOR FIRE HYDRANT SHALL HAVE A MINIMUM OF 6" DIAMETER.
5. BREAKAWAY EXTENSIONS SHOULD NOT BE SHORTER THAN 6" NOR LONGER THAN 12".
6. TO ALLOW CONTINUAL FIRE DEPARTMENT ACCESS WHEREVER FEASIBLE, VALVE LOCATION SHALL BE OUTSIDE OF PARKING LANE.
7. ALL MECHANICAL JOINTS SHALL BE PROVIDED WITH APPROVED JOINT RESTRAINT DEVICES, "MEGALUGS" BY EBBA, OR EQUAL..

CITY OF DALY CITY, CALIFORNIA — DEPARTMENT OF PUBLIC WORKS

WATER MAIN CONNECTION – FIRE HYDRANTS (COMMERCIAL AREA)

DRAWN BY : A. TAN

DATE: 07/07

APPROVED BY: MP Sharma , CITY ENGINEER

STANDARD DRAWING NO. W-6

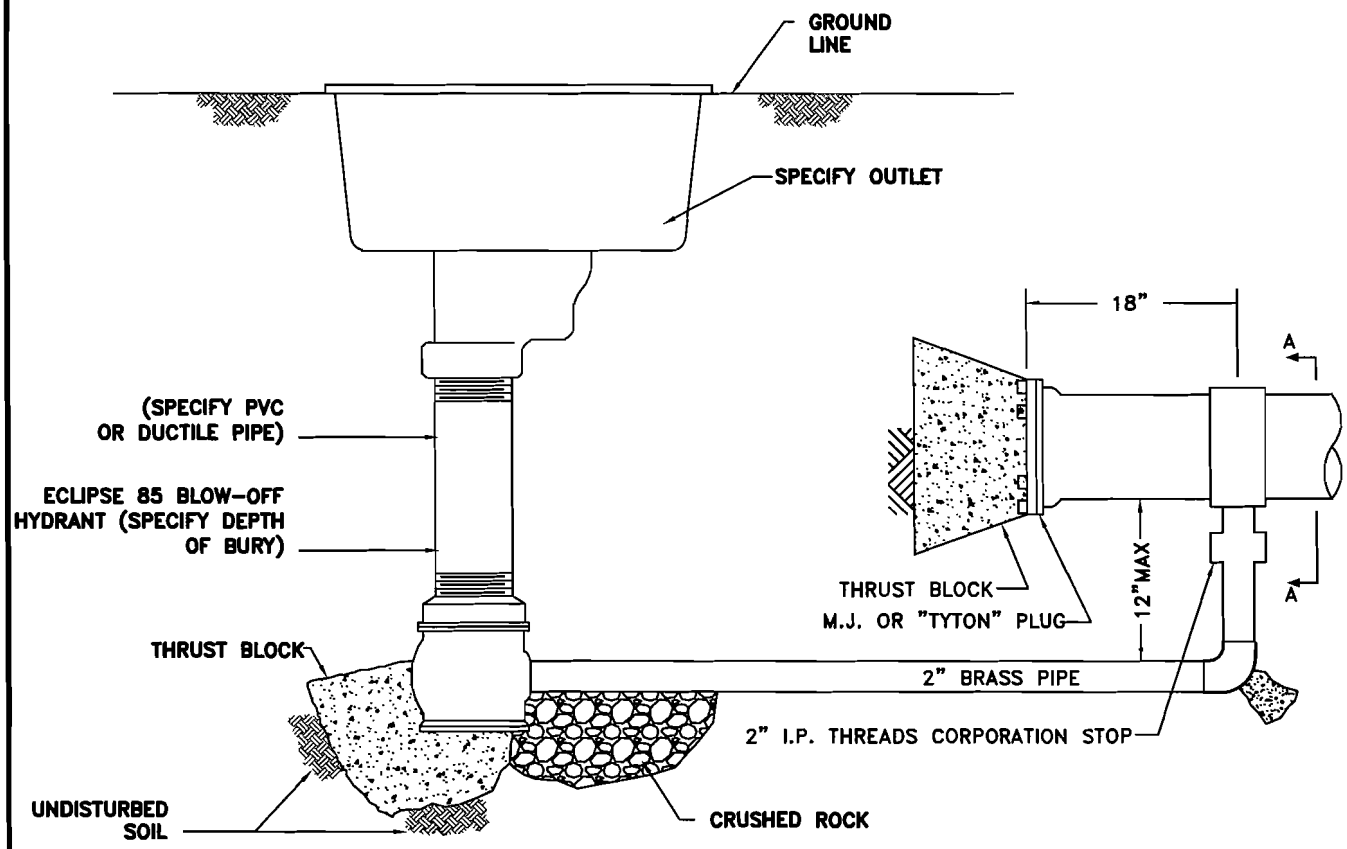

ECLIPSE # 85 BLOW-OFF

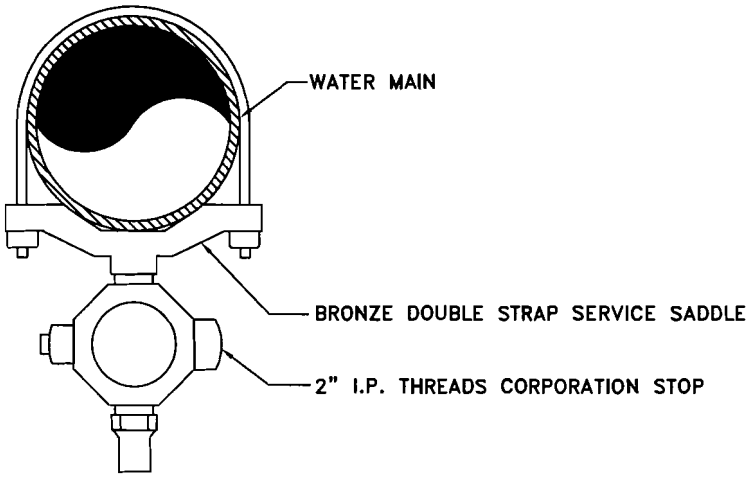

SECTION AA
CONNECTION DETAIL

NOTES:

1. VALVE BOX AND COVER:
   FOR SIDEWALK OR GRASS INSTALLATION USE CHRISTY F22 OR APPROVED EQUAL.
   FOR STREET INSTALLATION USE CHRISTY G-5 OR APPROVED EQUAL.

2. "WATER" SHALL BE INSCRIBED ON VALVE BOX COVERS.

CITY OF DALY CITY, CALIFORNIA — DEPARTMENT OF PUBLIC WORKS

BELOW GROUND BLOW-OFF DETAILS

DRAWN BY : I. SINGH

DATE: 07/07 — APPROVED BY: M P Sharma, CITY ENGINEER — STANDARD DRAWING NO. W-7

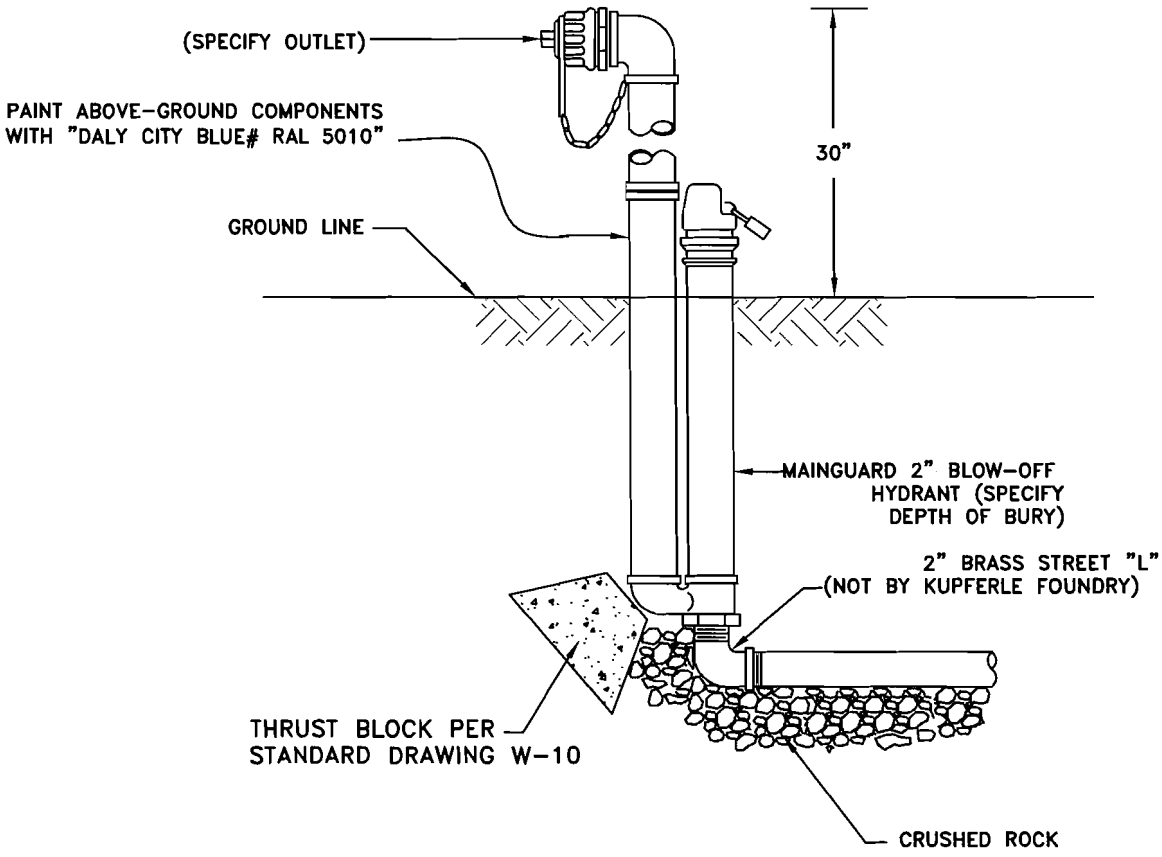

BLOW-OFF INSTALLATION

NOTES:

1. BLOW-OFF HYDRANTS SHALL BE MAINGAURD HYDRANT NO. 77 POST HYDRANTS AS MANUFACTURED BY JOHN C. KUPFERLE FOUNDRY COMPANY, ST. LOUIS, MO., OR EQUIVALENT.
2. HYDRANTS SHALL BE SELF-DRAINING, NON-FREEZING, COMPRESSION TYPE WITH 2-3/16" MAIN VALVE OPENING. INLET CONNECTION SHALL BE (2" IP, 2-1/2" IP, 3" IP, 2" MJ OR 3" MJ). OUTLET SHALL BE (1-1/4", 1-1/2", 2" OR 2-1/2" IP OR NST).
3. HYDRANTS SHALL HAVE A 3" DUCTILE IRON PIPE RISER WITH A CAST IRON STOCK TOP, AND NON-TURNING OPERATING ROD. PRINCIPAL INTERIOR OPERATING PARTS SHALL BE BRASS AND REMOVABLE FROM THE HYDRANT FOR SERVICING WITHOUT EXCAVATING THE HYDRANT.
4. HYDRANTS SHALL BE SET IN 4 CUBIC FEET OF CRUSHED STONE TO ALLOW FOR PROPER DRAINAGE OF THE HYDRANT. RECOMMENDATIONS OF THE AWWA SHOULD BE FOLLOWED WHEN INSTALLING THE HYDRANT.
5. INSTALL TWO (2) BOLLARDS PER CITY STANDARD DRAWING S-27

CITY OF DALY CITY, CALIFORNIA — DEPARTMENT OF PUBLIC WORKS

ABOVE GROUND BLOW-OFF DETAILS

DRAWN BY : ISINGH

DATE: 07/07 — APPROVED BY: MPSharma, CITY ENGINEER — STANDARD DRAWING NO. W-7A

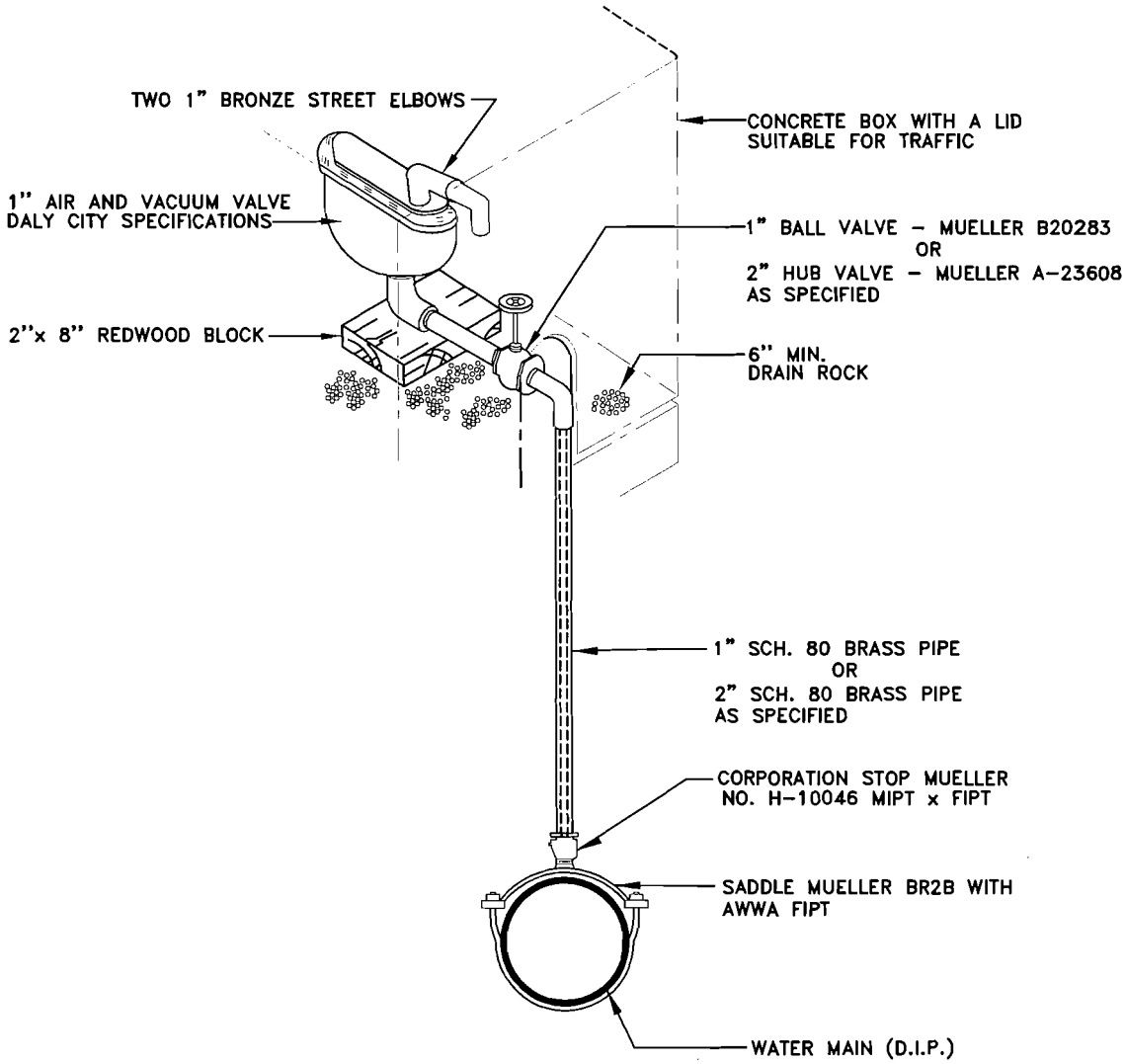

NOTES:

1. USE THIS INSTALLATION FOR SERVICES LOCATED DIRECTLY ABOVE THE MAIN. SEE STD DWG W-1 FOR ALTERNATE.
2. VALVE BOX AND COVER:

   SIDEWALK: CHRISTY B36 BOX AND EXTENSION WITH B36D REINFORCED CONCRETE LID COVER INSCRIBED "WATER"

   STREET: CHRISTY B1730 BOX AND EXTENSION WITH B1730-51JH STEELCHECKER PLATE H/20 LOADING AND HOLD DOWN BOLTS. COVER INSCRIBED "WATER"
3. AIR RELEASE VALVE SHALL BE LOCATED IN LAWN OR SIDEWALK AREAS AS FIRST CHOICE
4. USE COPPER PIPE INSTEAD OF BRASS PIPE, IF THE WATER MAIN IS PLACED IN THE STREET

CITY OF DALY CITY, CALIFORNIA — DEPARTMENT OF PUBLIC WORKS

DRAWN BY : A. TAN

AIR RELEASE VALVE ASSEMBLY

DATE: 6/03

APPROVED BY: M P Sharma, CITY ENGINEER

STANDARD DRAWING NO. W-8

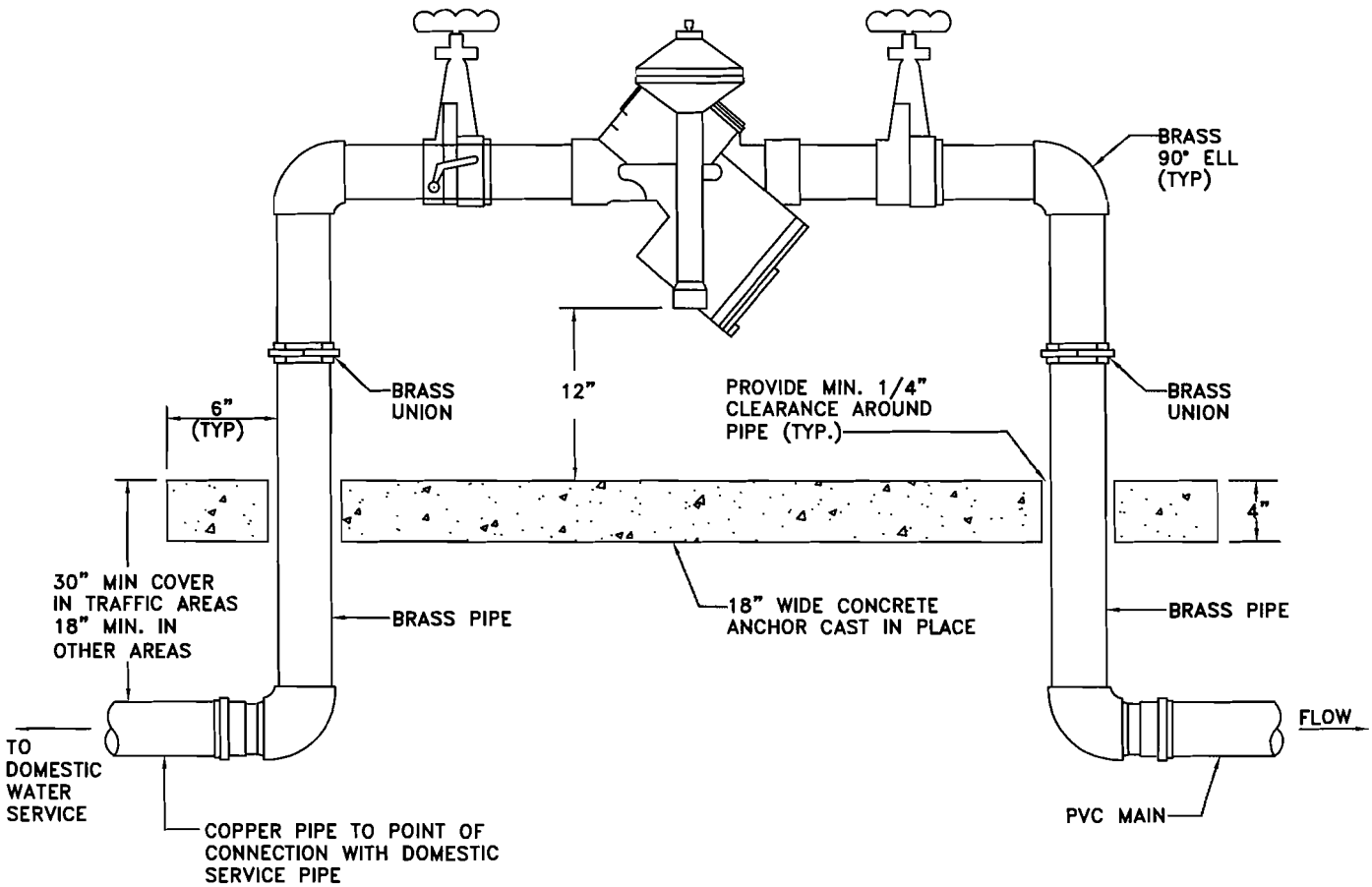

NOTES:

1. BACKFLOW UNITS SHALL BE ON THE "APPROVED BACKFLOW PREVENTION DEVICES" LIST BY THE HEALTH SERVICES AGENCY, A DEPARTMENT OF THE PUBLIC HEALTH AND ENVIRONMENTAL PROTECTION DIVISION OF THE COUNTY OF SAN MATEO. SEE SECTION 02710-10 PARAGRAPH 2.04 E, FOR REDUCED PRESSURE BACKFLOW PREVENTION DEVICE

2. UNIT SHALL BE TESTED AND CERTIFIED BY COUNTY REGISTERED TESTER.

3. DETAILS SHOWN ON THIS PLAN ARE FOR LANDSCAPE IRRIGATION SYSTEMS ONLY. FOR DETAILS OF FIRE AND OTHER BACKFLOW PREVENTION DEVICES, SEE PROJECT PLANS AND SPECIAL PROVISIONS.

4. DEVICES 2" AND SMALLER SHALL INCORPORATE BALL VALVES INSTEAD OF OS & Y VALVES.

CITY OF DALY CITY, CALIFORNIA — DEPARTMENT OF PUBLIC WORKS

DRAWN BY : A. TAN

REDUCED PRESSURE
BACKFLOW PREVENTION DEVICE

DATE: 07/07 — APPROVED BY: MP Sharma, CITY ENGINEER — STANDARD DRAWING NO. W-8A

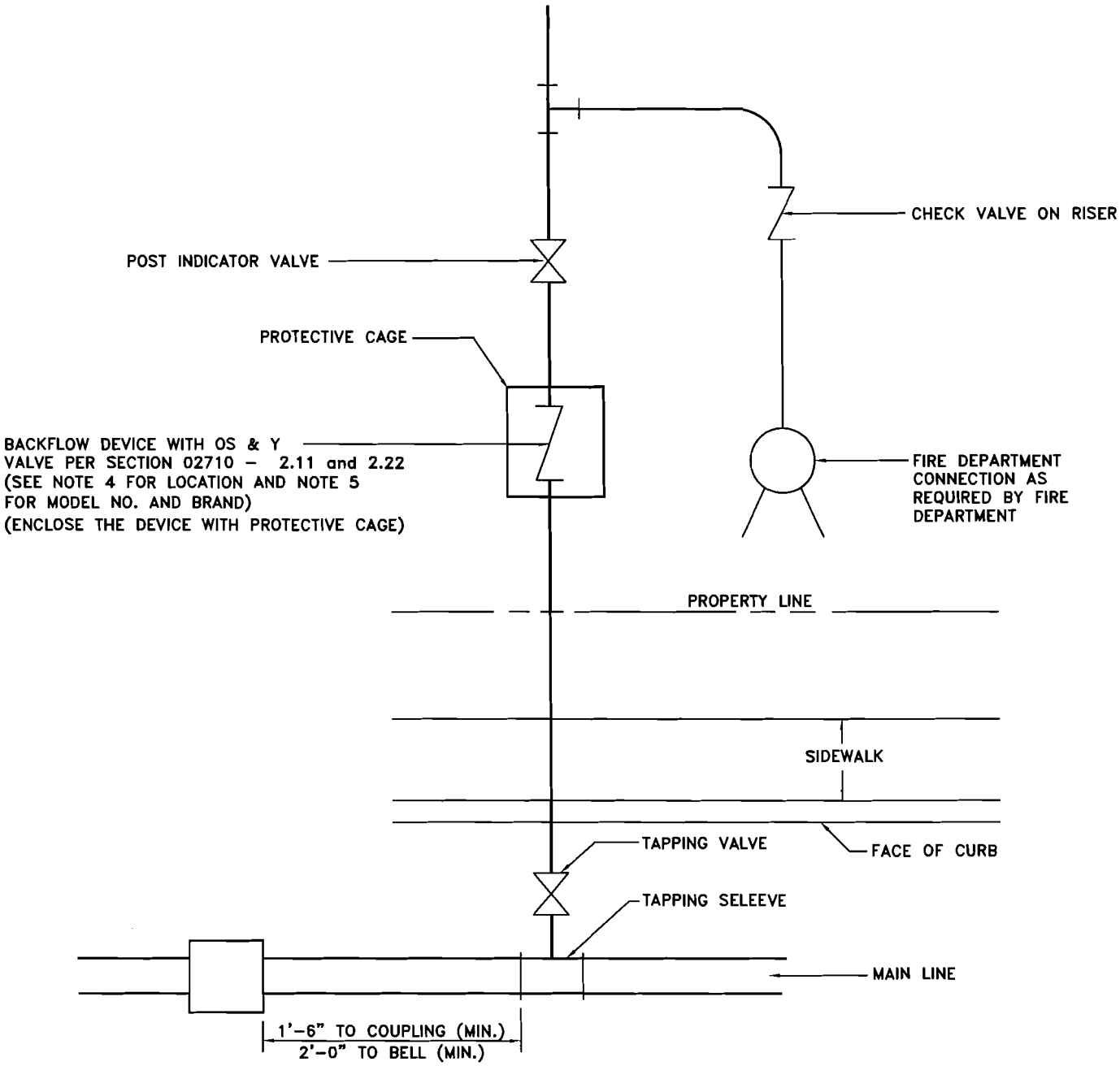

PLAN

NOTES:

1. THE 3/4" METER WILL BE FURNISHED BY CITY UPON PAYMENT OF APPLICABLE FEES AT THE CITY'S CASHIER'S OFFICE.
2. CONTRACTOR SHALL FURNISH 3/4" COPPER OR BRASS / BRONZE TRIM WITH CURB STOP AND BACKFLOW DEVICE. BOTTOM OF LID TO TOP OF METER SHALL BE 6 INCHES.
3. CONTRACTOR SHALL PROVIDE THRUST BLOCKS IN CONFORMANCE WITH STD DWG W–10.
4. THE BACKFLOW DEVICE SHALL BE INSTALLED IN FRONT OF THE BUILDING OR IN LANDSCAPE AREA OR INSIDE THE BUILDING, IF SPACE IS LIMITED IN FRONT OF THE BUILDING.
5. USE WILKINS 375DA OR 475DA OR EQUIVALENT REDUCED PRESSURE DETECTOR ASSEMBLIES. A BACKFLOW SETLER, MODELS MJS, FFS AND MJFS, SHALL BE INSTALLED WITH THIS BACKFLOW DEVICE.

CITY OF DALY CITY, CALIFORNIA — DEPARTMENT OF PUBLIC WORKS

DRAWN BY : I. SINGH — FIRE DETECTOR – CHECK VALVE AND CONNECTIONS

DATE: 07/07 — APPROVED BY: M P Sharma, CITY ENGINEER — STANDARD DRAWING NO. W–9

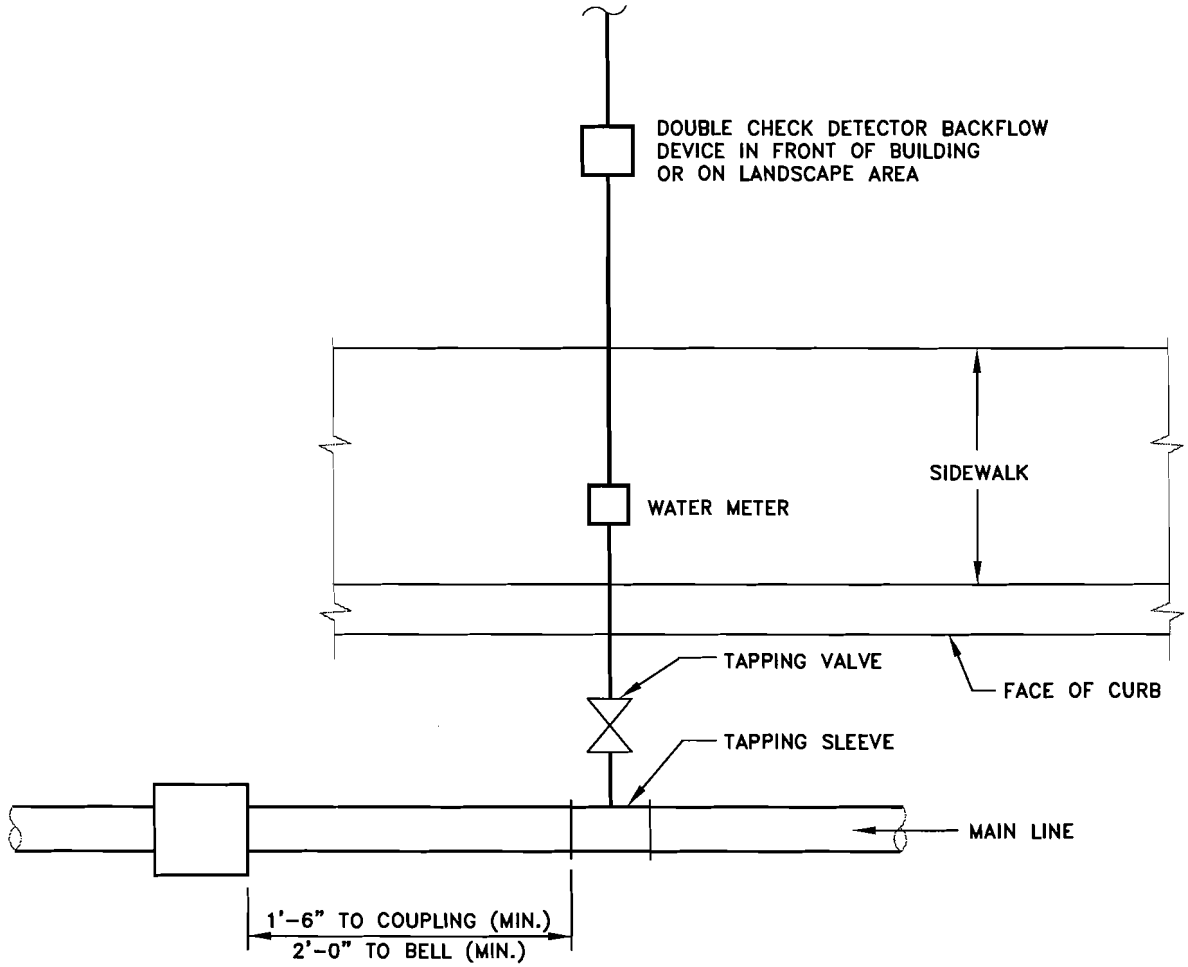

PLAN

NOTES:

1. SIZE OF BOX / VAULT SHALL BE APPROVED BY CITY WITH APPROPRIATE EXTENSIONS, ALL AS PROVIDED BY CONTRACTOR. THE LID SHALL HAVE 1-3/4" DIA, HOLE DIRECTLY ABOVE THE METER FOR THE T - READ HOUSING.
2. CONTRACTOR SHALL CENTER THE METER READING LID OVER THE METER.
3. BOTTOM OF LID TO TOP OF METER SHALL BE 6 INCHES.
4. CONTRACTOR SHALL PROVIDE THRUST BLOCKS IN CONFORMANCE WITH STD DWG W-10.

CITY OF DALY CITY, CALIFORNIA — DEPARTMENT OF PUBLIC WORKS

DRAWN BY : acasilla

FIRE SERVICE FOR MULTI - STOREY RESIDENTIAL BUILDING
(AS REQUIRED)

DATE: 07/07 — APPROVED BY: M P Sharma, CITY ENGINEER — STANDARD DRAWING NO. W-9A

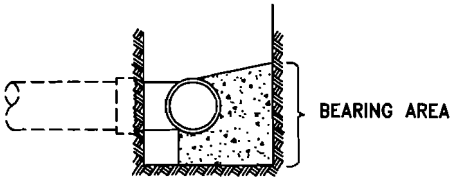

TYPICAL SECTION

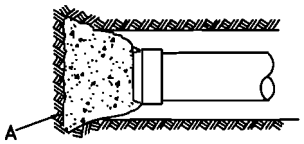

DETAIL A
PLUG

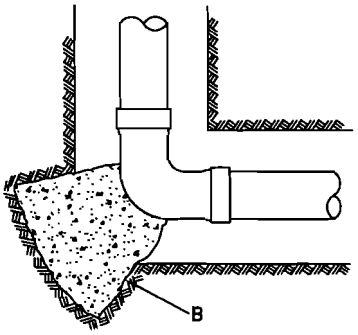

DETAIL B
90°

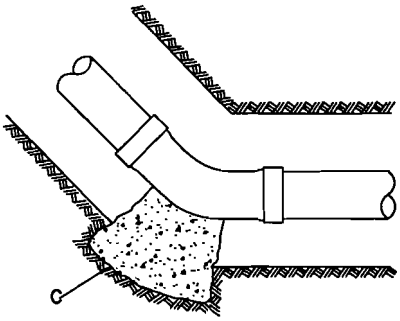

DETAIL C
C1=45°
C2=22 1/2°
C3=11 1/4°

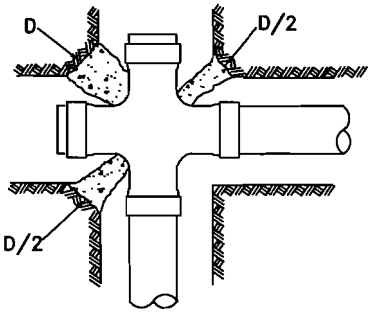

DETAIL D

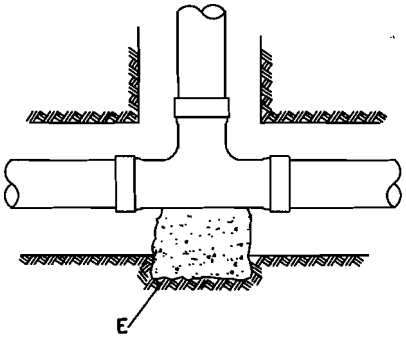

DETAIL E

REQUIRED BEARING AREAS – SQUARE FEET							
PIPE SIZE*	A	B	C1	C2	C3	D	E
4"	1.5	2.0	1.1	0.5	0.5	2.0	1.4
6"	3.0	4.0	2.2	1.1	1.0	4.0	2.9
8"	5.1	7.0	3.8	1.9	1.0	7.0	4.9
10"	8.3	11.4	6.2	3.1	1.5	11.4	8.1
12"	11.7	16.2	8.8	4.5	2.2	16.2	11.5
14"	15.9	22.0	11.9	6.0	3.0	22.0	15.6
16"	20.5	28.5	15.4	7.7	3.9	28.5	20.2

* FOR PIPE CLASS 150 (150 PSI)

NOTES:

1. ALL CONCRETE SHALL BE CLASS 'B' (2500 PSI)
2. ALL THRUST BLOCKS SHALL BE KEPT CLEAR OF LUGS.
3. ALL UNSUPPORTED SURFACES SHALL BE FORMED.
4. LETTERS ON DETAILS REFER TO MINIMUM REQUIRED BEARING AREA (SEE TABLE) WHICH IS BASED ON 150 PSI AND 2000 PSF SOIL BEARING. HIGHER PRESSURE SHALL REQUIRE PROPORTIONATELY LARGER BEARING AREAS.
5. THRUST BLOCKS FOR CASES NOT SHOWN SHALL BE CONSTRUCTED AS DIRECTED BY THE ENGINEER.
6. ALL THRUST BLOCKS SHALL BE POURED AGAINST UNDISTURBED EARTH.

CITY OF DALY CITY, CALIFORNIA — DEPARTMENT OF PUBLIC WORKS

WATER MAIN THRUST BLOCKS

DRAWN BY : A. TAN

DATE: 07/07 APPROVED BY: M P Sharma , CITY ENGINEER STANDARD DRAWING NO. W-10

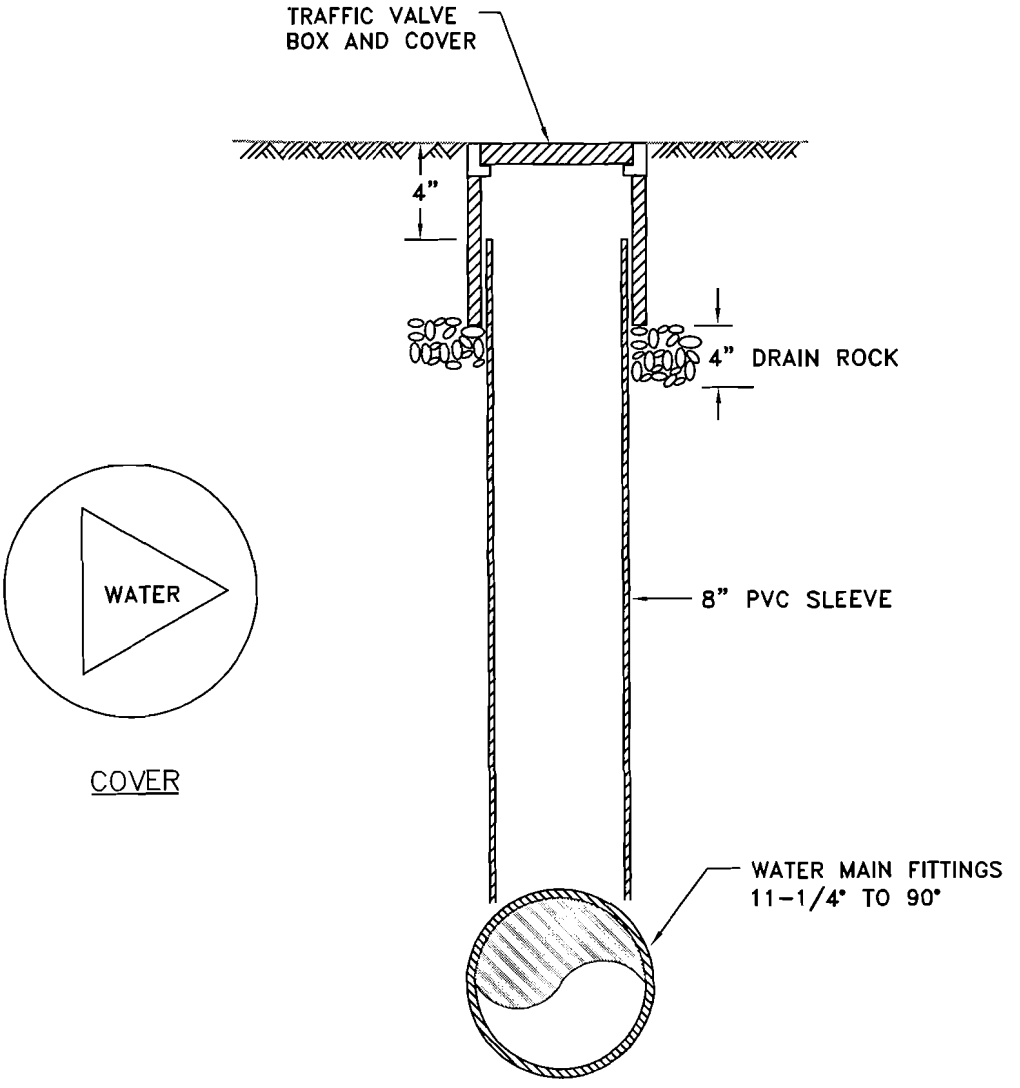

NOTES:

1. VALVE BOX AND COVER:
   FOR SIDEWALK, GRASS OR STREET INSTALLATION USE CHRISTY G-4 OR APPROVED EQUAL.
2. "WATER" SHALL BE INSCRIBED ON VALVE BOX COVERS.
3. TO BE INSTALLED OVER ANGLE POINTS OF PIPE RUNS WITH DEFLECTIONS OF 11-1/4° TO 90°

CITY OF DALY CITY, CALIFORNIA — DEPARTMENT OF PUBLIC WORKS

DRAWN BY : acasilla

ANGLE MARKER DETAILS

DATE: 6/03 APPROVED BY: MPSharma, CITY ENGINEER STANDARD DRAWING NO. W-11