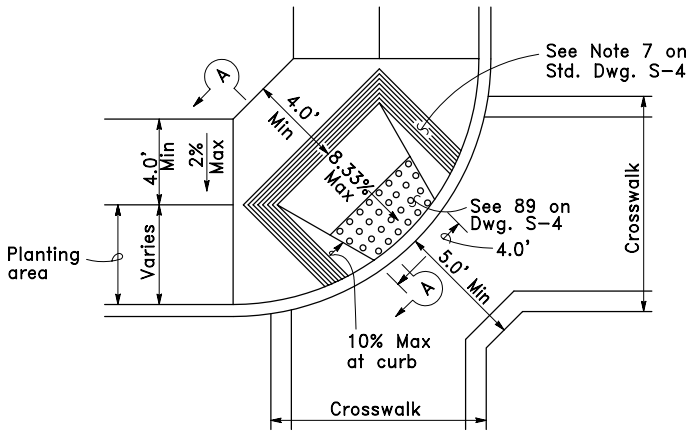

CASE E

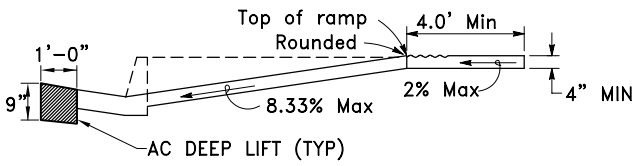

SECTION A–A

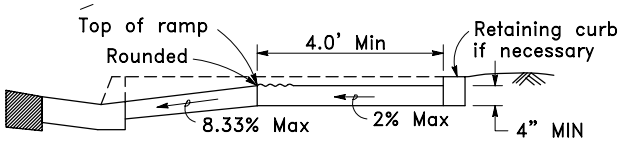

SECTION B–B

Depress entire sidewalk as required

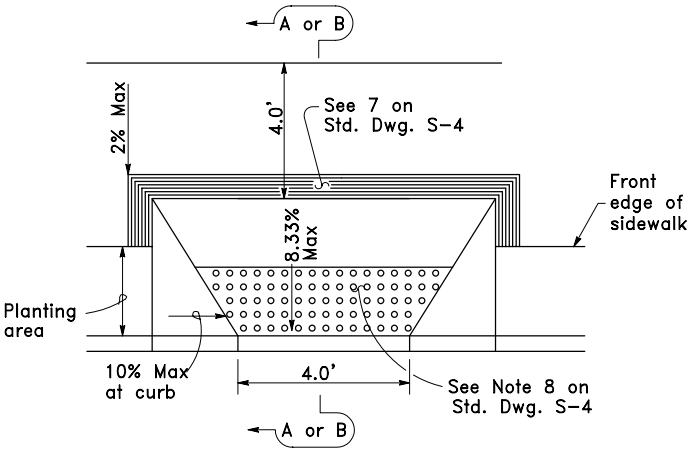

CASE F

See Note 4 on Std. Dwg. S-4

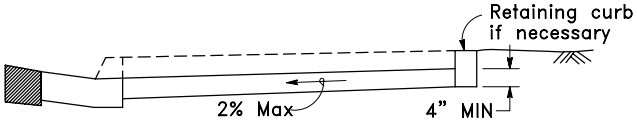

SECTION C–C

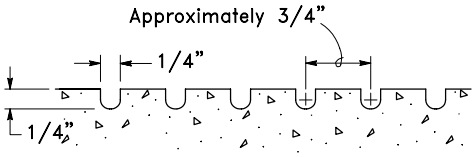

GROOVING DETAIL

1'-0" WIDE (TYPICAL)

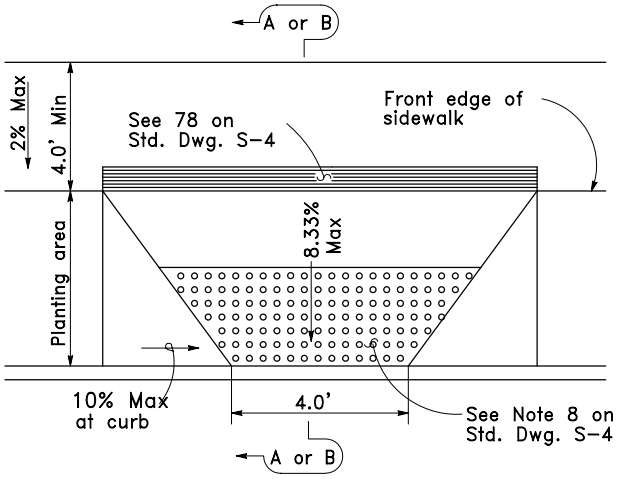

CASE G

See Note 4 on Std. Dwg. S-4

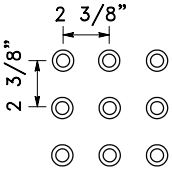

RAISED TRUNCATED
DOME PATTERN

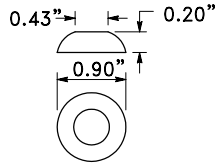

RAISED TRUNCATED DOME

DETECTABLE WARNING SURFACE

See Note 8 on Std. Dwg. S-4

NOTE: FOR ALL REFERENCED NOTES SEE STD. DWG S-4.

CITY OF DALY CITY, CALIFORNIA — DEPARTMENT OF PUBLIC WORKS

CURB RAMP DETAILS – II

DRAWN BY : A. TAN

DATE: 11/04 APPROVED BY: MP Sharma , CITY ENGINEER STANDARD DRAWING NO. S-5