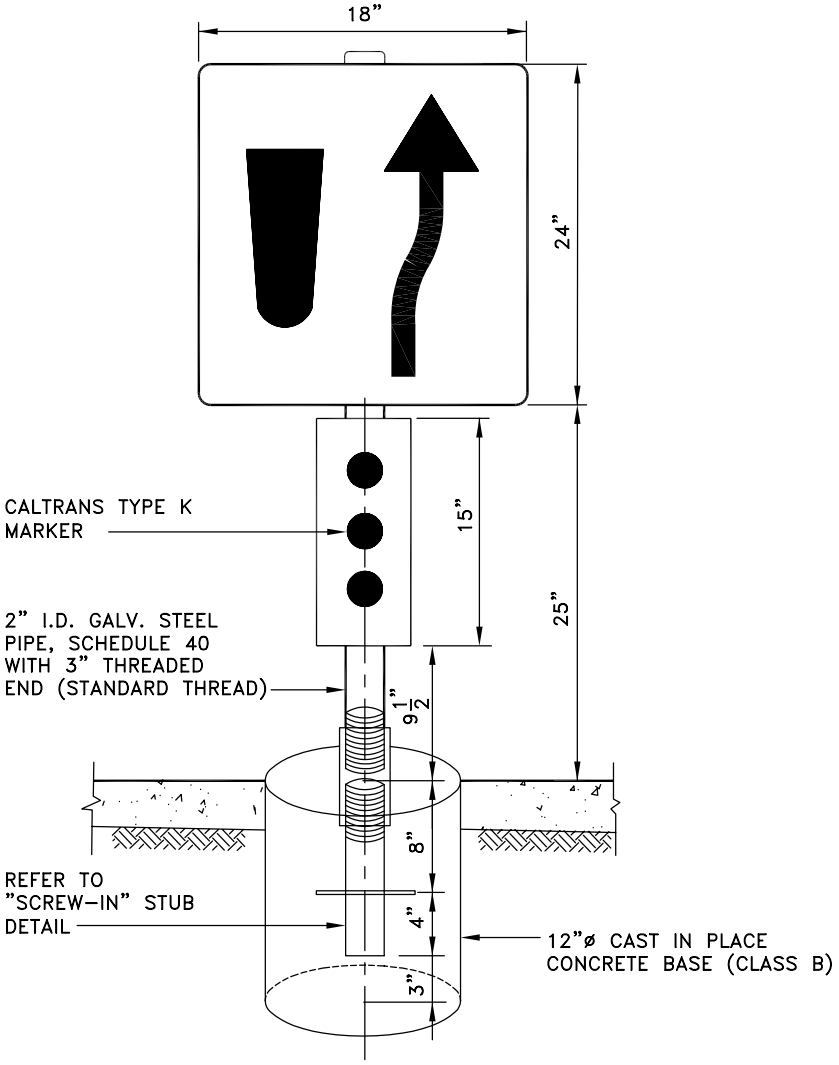

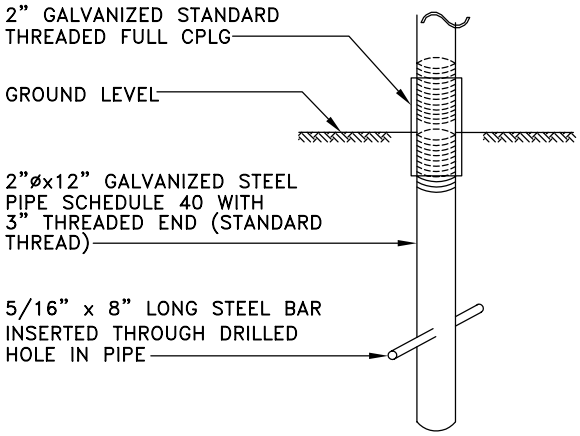

"SCREW-IN" STUB DETAIL

CITY OF DALY CITY, CALIFORNIA — DEPARTMENT OF PUBLIC WORKS

TRAFFIC SIGN – MEDIAN INSTALLATION

DRAWN BY : A. TAN

DATE: 6/03

APPROVED BY: MP Sharma, CITY ENGINEER

STANDARD DRAWING NO. S-21

Reviser: ANDY TAN
Dwg File: N:\Staff\Andy\Misc\STANDARD\S-21.dwg
Time: 11:1:37
Date: 8/31/1999