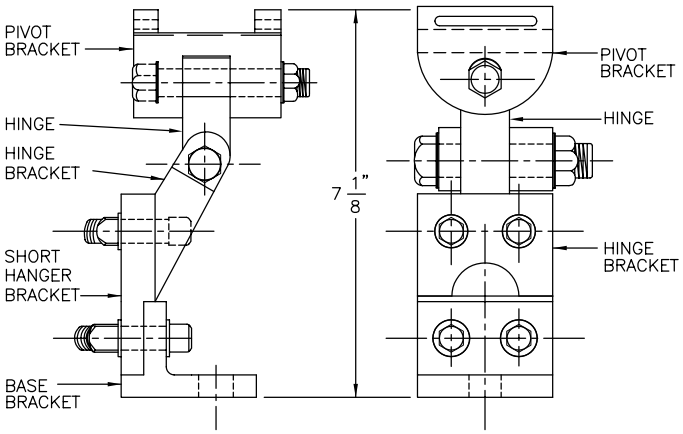

FIX LENGTH SIGN BRACKET

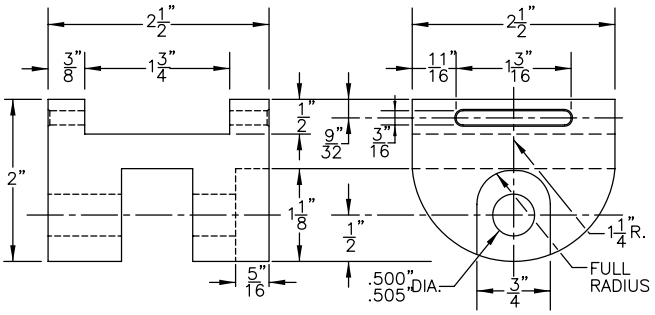

PIVOT BRACKET

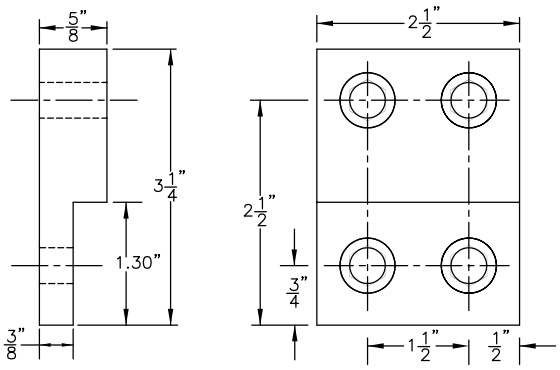

SHORT HANGER BRACKET

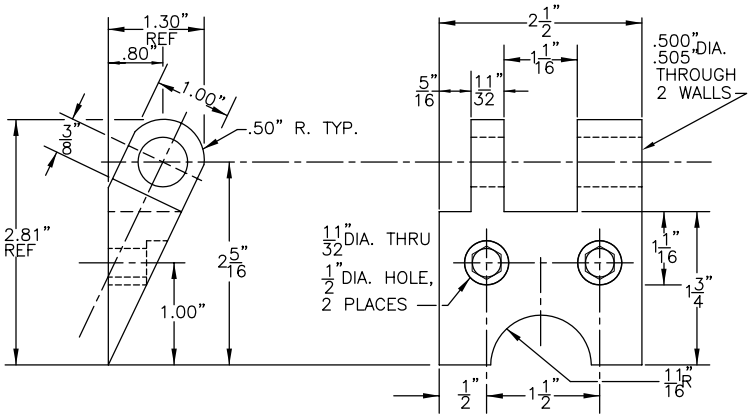

HINGE BRACKET

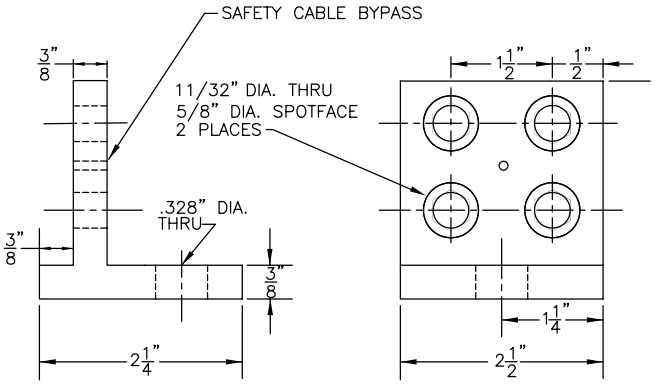

BASE BRACKET

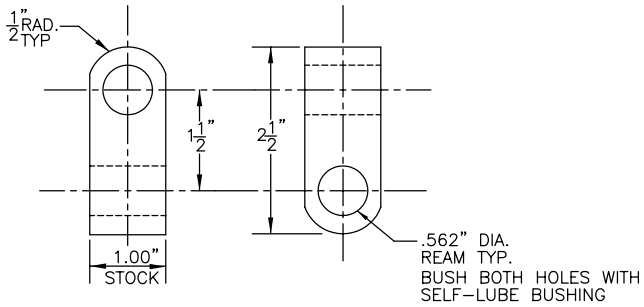

HINGE

NOTE: ALL PARTS SHALL BE MADE OF ALUMINUM OR OTHER CITY APPROVED MATERIAL.

CITY OF DALY CITY, CALIFORNIA — DEPARTMENT OF PUBLIC WORKS

INTERNALLY ILLUMINATED
STREET NAME SIGN – BRACKET DETAILS–1

DRAWN BY : A. TAN

DATE: 02/04

APPROVED BY: MP Sharma, CITY ENGINEER

STANDARD DRAWING NO. S–15